HIGH-VOLTAGE HIGH AND LOW SIDE DRIVER

1 FEATURES

- HIGH VOLTAGE RAIL UP TO 600 V
- dV/dt IMMUNITY ± 50 V/nsec IN FULL TEMPERATURE RANGE
- DRIVER CURRENT CAPABILITY:400 mA SOURCE,650 mA SINK
- SWITCHING TIMES 70/40 nsec RISE/FALL WITH 1nF LOAD
- 3.3V, 5V, 15V CMOS/TTL INPUTS COMPARATORS WITH HYSTERESYS AND PULL DOWN
- INTERNAL BOOTSTRAP DIODE
- OUTPUTS IN PHASE WITH INPUTS
- DEAD TIME AND INTERLOCKING FUNCTION

2 DESCRIPTION

The L6388 is an high-voltage device, manufactured with the BCD"OFF-LINE" technology.

Figure 1. Package



Table 1. Order Codes

Part Number	Package
L6388	DIP8
L6388D	SO8
L6388D013TR	SO8 in Tape & Reel

It has a Driver structure that enables to drive independent referenced N Channel Power MOS or IGBT. The Upper (Floating) Section is enabled to work with voltage Rail up to 600V.

The Logic Inputs are CMOS/TTL compatible for ease of interfacing with controlling devices.

Figure 2. Block Diagram

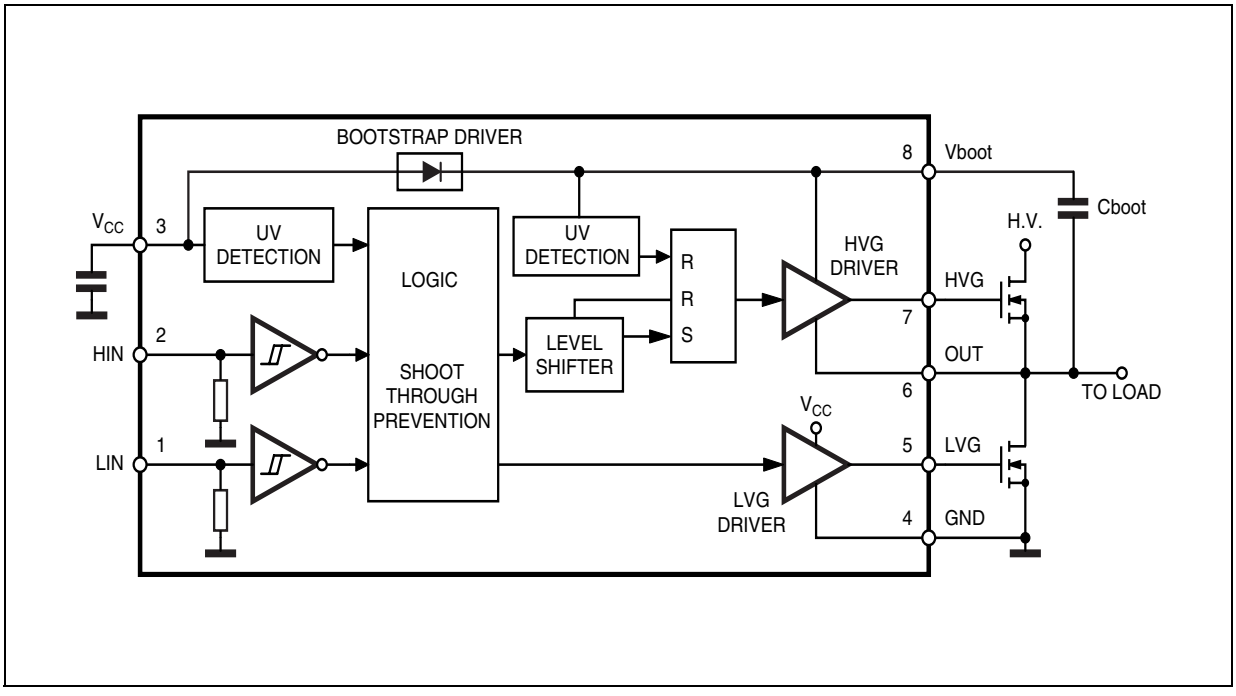

Table 2. Absolute Maximum Rating

Symbol	Parameter	Value	Unit
V_{out}	Output Voltage	-3 to V_{boot} - 18	V
V_{cc}	Supply Voltage	- 0.3 to +18	V
V_{boot}	Floating Supply Voltage	- 1 to 618	V
V_{hvg}	High Side Gate Output Voltage	- 1 to V_{boot}	V
V_{lvg}	Low Side Gate Output Voltage	-0.3 to V_{cc} +0.3	V
V_i	Logic Input Voltage	-0.3 to V_{cc} +0.3	V
dV_{out}/dt	Allowed Output Slew Rate	50	V/ns
P_{tot}	Total Power Dissipation (T_j = 85°C)	750	mW
T_j	Junction Temperature	150	°C
T_{stg}	Storage Temperature	-50 to 150	°C

Note: ESD immunity for pins 6, 7 and 8 is guaranteed up to 900V (Human Body Model)

Figure 3. Pin Connection (Top view)

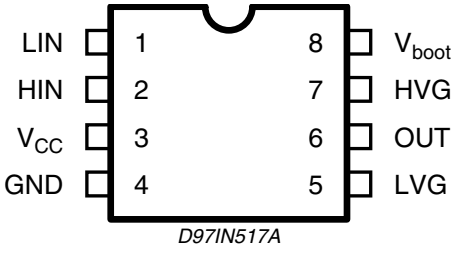

D97IN517A

Table 3. Pin Description

N.	Name	Type	Function
1	LIN	I	Low Side Driver Logic Input
2	HIN	I	High Side Driver Logic Input
3	Vcc	I	Low Voltage Power Supply
4	GND		Ground
5	LVG (*)	O	Low Side Driver Output
6	OUT	O	High Side Driver Floating Reference
7	HVG (*)	O	High Side Driver Output
8	Vboot		Bootstrap Supply Voltage

(*) The circuit guarantees 0.3V maximum on the pin (@ Isink = 10mA). This allows to omit the "bleeder" resistor connected between the gate and the source of the external MOSFET normally used to hold the pin low.

Table 4. Thermal Data

Symbol	Parameter	SO8	Minidip	Unit
$R_{th\ j\text{-}amb}$	Thermal Resistance Junction to Ambient	150	100	°C/W

Table 5. Recommended Operating Conditions

Symbol	Pin	Parameter	Test Condition	Min.	Typ.	Max.	Unit
V_{out}	6	Output Voltage		Note 1		580	V
V_{BS} (*)	8	Floating Supply Voltage		Note 1		17	V
f_{sw}		Switching Frequency	HVG,LVG load CL = 1nF			400	kHz
V_{cc}	3	Supply Voltage				17	V
T_j		Junction Temperature		-45		125	°C

Note 1: If the condition Vboot - Vout < 18V is guaranteed, Vout can range from -3 to 580V
(*): V_{BS} = Vboot - Vout

Table 6. Electrical Characteristics

(V_{cc} = 15V; T_j = 25°C)

Symbol	Pin	Parameter	Test Condition	Min.	Typ.	Max.	Unit
AC OPERATION							
t_{on}	1 vs 5 2 vs 7	High/Low Side Driver Turn-On Propagation Delay	V_{out} = 0V		225	300	ns
t_{off}		High/Low Side Driver Turn-Off Propagation Delay	V_{out} = 0V		160	220	ns
t_r	7,5	Rise Time	C_L = 1000pF		70	100	ns
t_f	7,5	Fall Time	C_L = 1000pF		40	80	ns
DT	7,5	Dead Time		220	320	420	ns
DC OPERATION							
Low Supply Voltage Section							
V_{ccth1}	3	V_{cc} UV Turn On Threshold		9.1	9.6	10.1	V
V_{ccth2}		V_{cc} UV Turn Off Threshold		7.9	8.3	8.8	V
V_{cchys}		V_{cc} UV Hysteresis		0.9			V
I_{qccu}		Undervoltage Quiescent Supply Current	$V_{cc} \leq 9V$		250	330	µA
I_{qcc}		Quiescent Current	V_{cc} = 15V		350	450	µA
R_{dson}		Bootstrap Driver on Resistance (**)	V_{cc}		125		Ω
Bootstrapped Supply Voltage Section							
V_{BSth1}	8	V_{BS} UV Turn On Threshold		8.5	9.5	10.5	V
V_{BSth2}		V_{BS} UV Turn Off Threshold		7.2	8.2	9.2	V
V_{BShys}		V_{BS} UV Hysteresis		0.9			V
IQ_{BS}		V_{BS} Quiescent Current	HVG ON			250	µA
ILK		High Voltage Leakage Current	$V_{hvg} = V_{out} = V_{boot}$ = 600V			10	µA
High/Low Side Driver							
I_{so}	5,7	Source Short Circuit Current	$V_{IN} = V_{ih}$ (tp < 10µs)	300	400		mA
I_{si}		Sink Short Circuit Current	$V_{IN} = V_{il}$ (tp < 10µs)	500	650		mA

Table 6. Electrical Characteristics (continued)
(V_{cc} = 15V; T_j = 25°C)

Symbol	Pin	Parameter	Test Condition	Min.	Typ.	Max.	Unit
Logic Inputs							
V_{il}	1, 2	Low Level Logic Input Voltage				1.1	V
V_{ih}		High Level Logic Input Voltage		1.8			V
I_{ih}		High Level Logic Input Current	V_{IN} = 15V		20	70	µA
I_{il}		Low Level Logic Input Current	V_{IN} = 0V	-1			µA

(**) RDSON is tested in the following way: $R_{DSON} = \frac{(V_{CC} - V_{CBOOT1}) - (V_{CC} - V_{CBOOT2})}{I_1(V_{CC}, V_{CCBOOT1}) - I_2(V_{CC}, V_{CCBOOT2})}$

where I_1 is pin 8 current when $V_{CBOOT} = V_{CBOOT1}$, I2 when $V_{CBOOT} = V_{CBOOT2}$.

Figure 4. Dead Time Waveforms Definitions

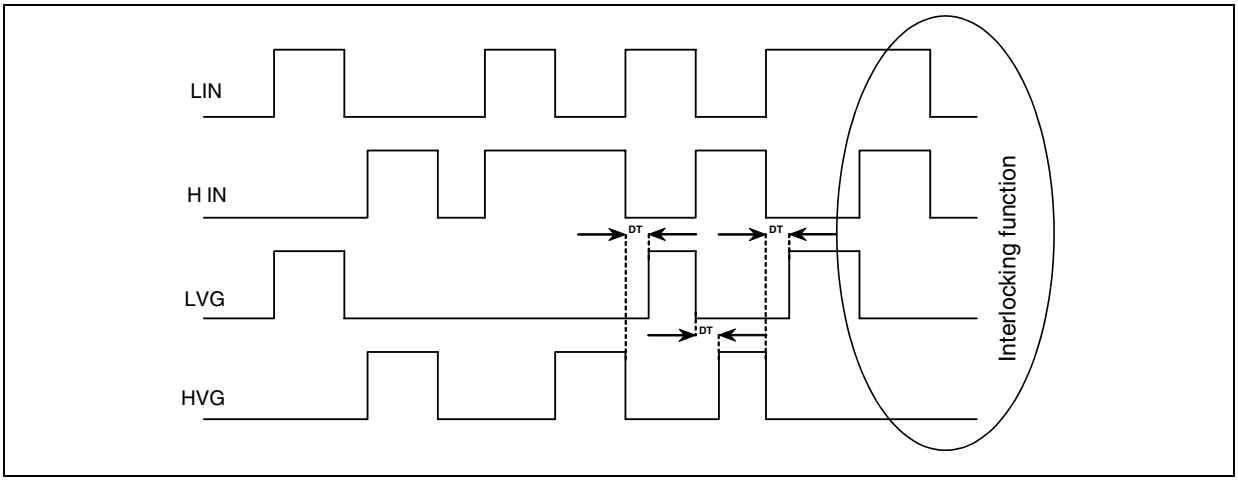

Figure 5. Propagation Delay Waveform Definitions

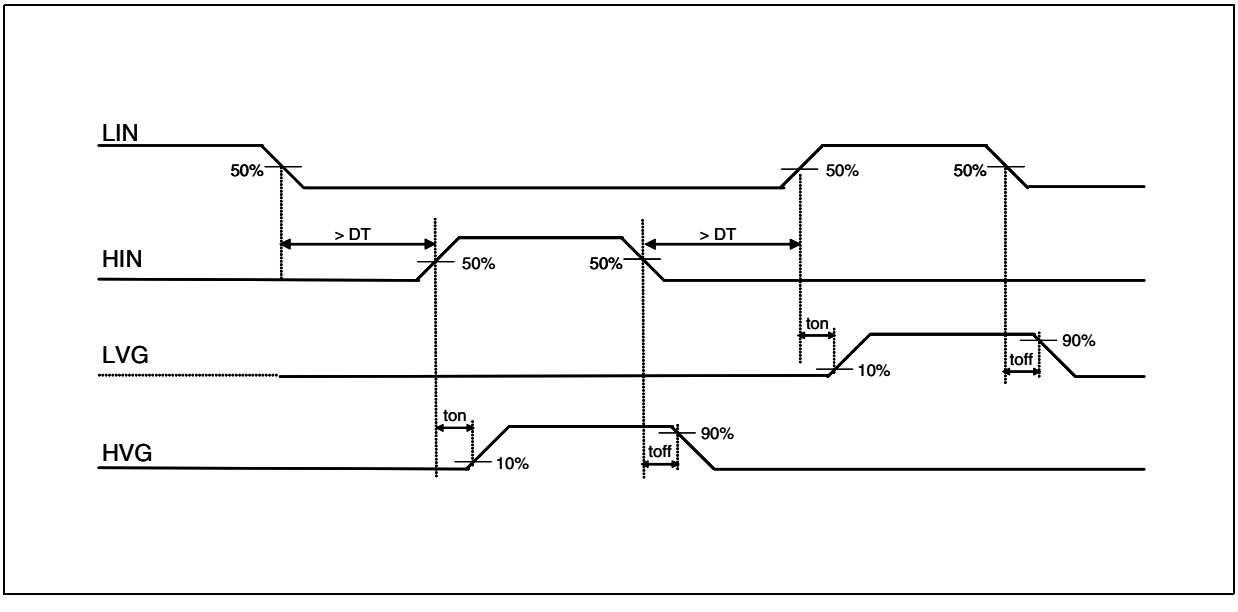

3 INPUT LOGIC

Input logic is provided with an interlocking circuitry which avoids the two outputs (LVG, HVG) to be active at the same time when both the logic input pins (LIN, HIN) are at a high logic level. In addition, to prevent cross conduction of the external MOSFETs, after each output is turned-off the other output cannot be turned-on before a certain amount of time (DT) (see Figure 4).

Figure 6. Typical Rise and Fall Times vs. Load Capacitance

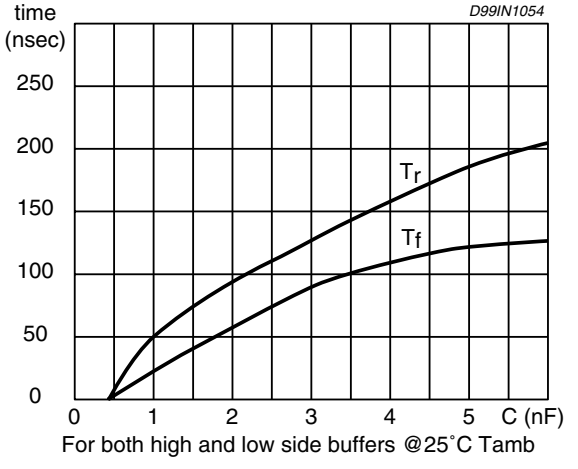

Figure 7. Quiescent Current vs. Supply Voltage

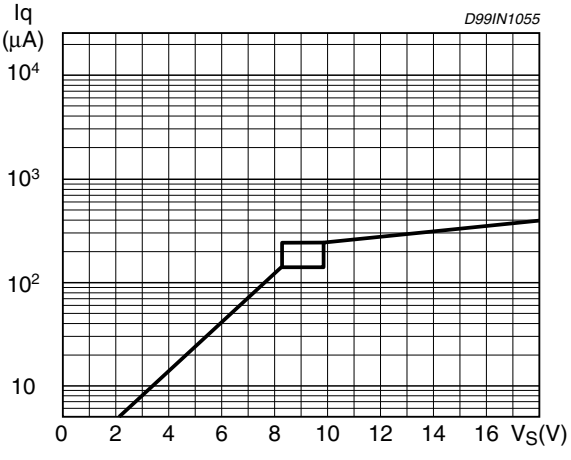

3.1 BOOTSTRAP DRIVER

A bootstrap circuitry is needed to supply the high voltage section. This function is normally accomplished by a high voltage fast recovery diode (fig. 8a). In the L6388 a patented integrated structure replaces the external diode. It is realized by a high voltage DMOS, driven synchronously with the low side driver (LVG), with in series a diode, as shown in fig. 8b

An internal charge pump (fig. 8b) provides the DMOS driving voltage .

The diode connected in series to the DMOS has been added to avoid undesirable turn on of it.

3.2 CBOOT selection and charging

To choose the proper C_{BOOT} value the external MOS can be seen as an equivalent capacitor. This capacitor C_{EXT} is related to the MOS total gate charge :

$$C_{EXT} = \frac{Q_{gate}}{V_{gate}}$$

The ratio between the capacitors C_{EXT} and C_{BOOT} is proportional to the cyclical voltage loss .

It has to be:

$$CBOOT >>> CEXT$$

e.g.: if Q_{gate} is 30nC and V_{gate} is 10V, C_{EXT} is 3nF. With C_{BOOT} = 100nF the drop would be 300mV.

If HVG has to be supplied for a long time, the CBOOT selection has to take into account also the leakage losses.

e.g.: HVG steady state consumption is lower than 200µA, so if HVG T_{ON} is 5ms, CBOOT has to supply 1µC to C_{EXT}. This charge on a 1µF capacitor means a voltage drop of 1V.

The internal bootstrap driver gives great advantages: the external fast recovery diode can be avoided (it usually has great leakage current). This structure can work only if V_{OUT} is close to GND (or lower) and in the meanwhile the LVG is on. The charging time (T_{charge}) of the C_{BOOT} is the time in which both conditions are fulfilled and it

has to be long enough to charge the capacitor.

The bootstrap driver introduces a voltage drop due to the DMOS RDSON (typical value: 125 Ohm). At low frequency this drop can be neglected. Anyway increasing the frequency it must be taken in to account.

The following equation is useful to compute the drop on the bootstrap DMOS:

$$V_{drop} = I_{charge} R_{dson} \rightarrow V_{drop} = \frac{Q_{gate}}{T_{charge}} R_{dson}$$

where Q_{gate} is the gate charge of the external power MOS, R_{dson} is the on resistance of the bootstrap DMOS, and T_{charge} is the charging time of the bootstrap capacitor.

For example: using a power MOS with a total gate charge of 30nC the drop on the bootstrap DMOS is about 1V, if the T_{charge} is 5µs. In fact:

$$V_{drop} = \frac{30nC}{5\mu s} \cdot 125\Omega \sim 0.8V$$

V_{drop} has to be taken into account when the voltage drop on C_{BOOT} is calculated: if this drop is too high, or the circuit topology doesn't allow a sufficient charging time, an external diode can be used.

Figure 8. Bootstrap Driver.

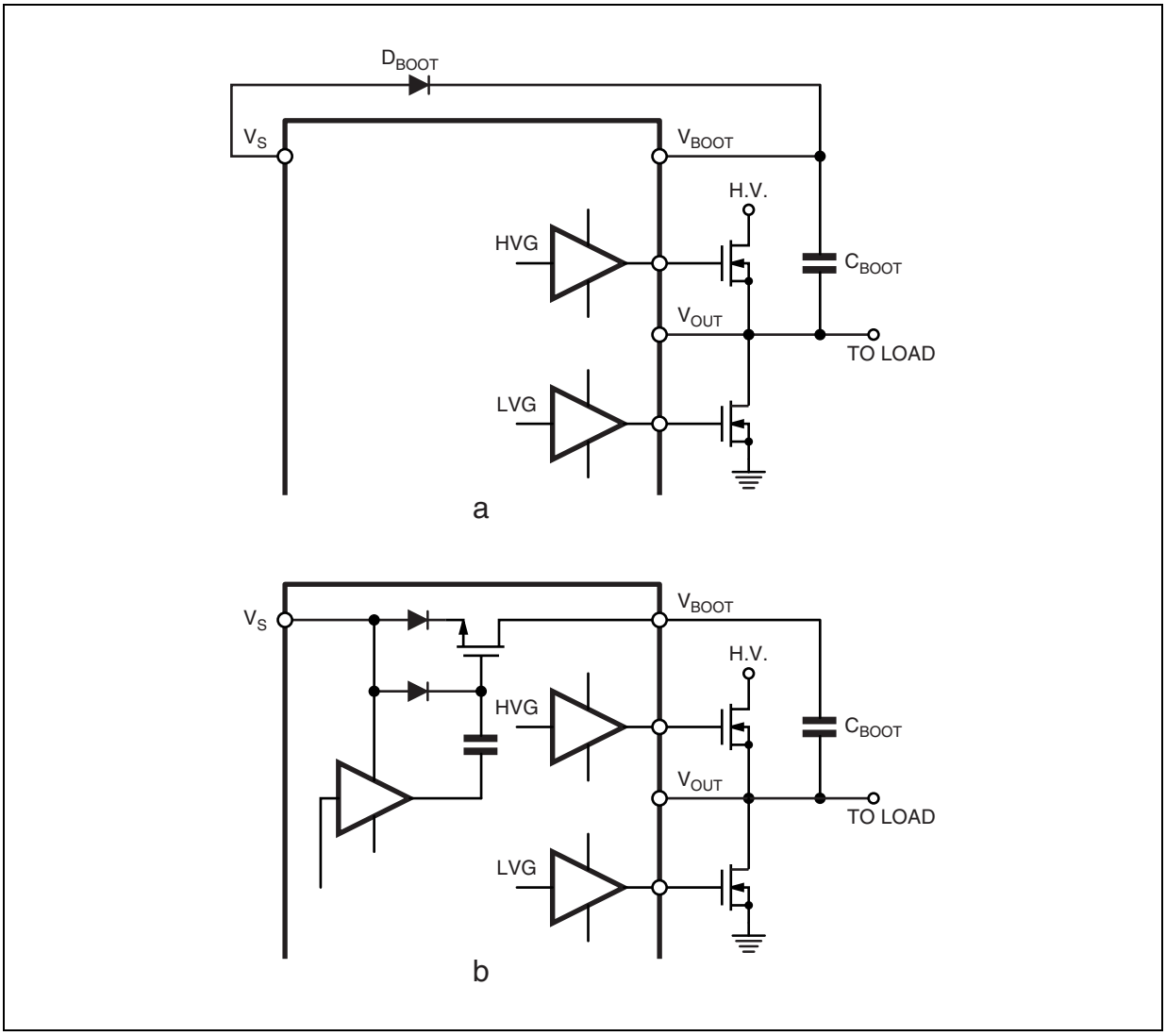

Figure 9. V_{BOOT} UV Turn On Threshold vs. Temperature

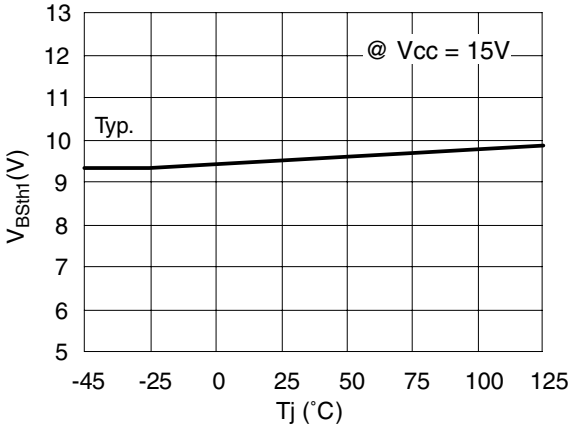

Figure 10. V_{BOOT} UV Turn Off Threshold vs. Temperature

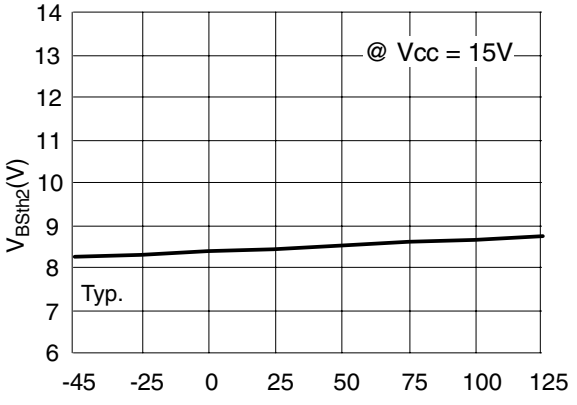

Figure 11. V_{CC} UV Turn On Threshold vs. Temperature

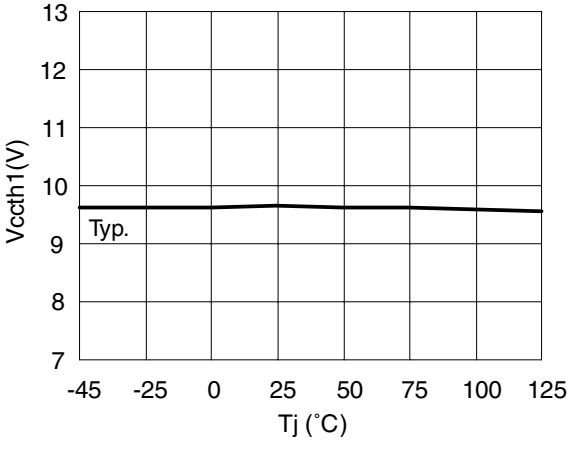

Figure 12. V_{CC} UV Turn Off Threshold vs. Temperature

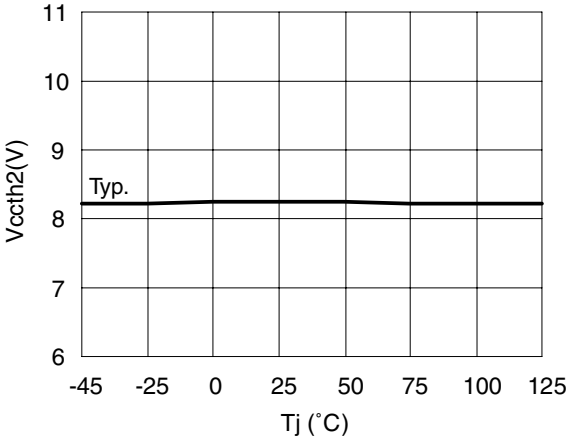

Figure 13. Output Source Current vs. Temperature

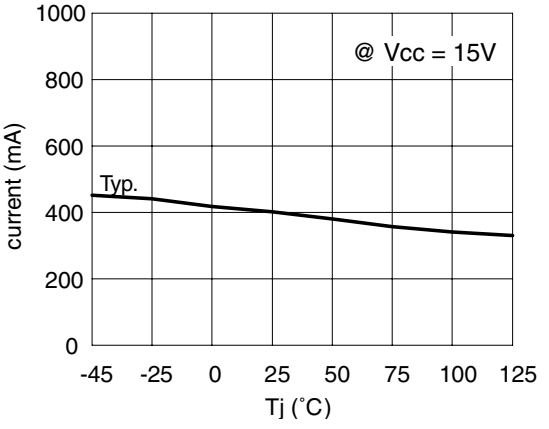

Figure 14. Output Sink Current vs. Temperature

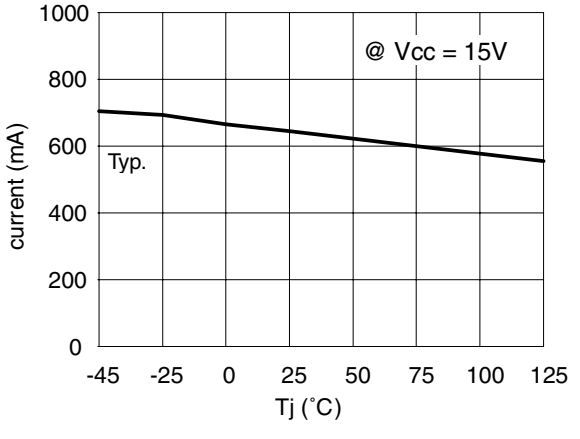

Figure 15. DIP8 Mechanical Data & Package Dimensions

DIM.	mm			inch		
	MIN.	TYP.	MAX.	MIN.	TYP.	MAX.
A		3.32			0.131	
a1	0.51			0.020		
B	1.15		1.65	0.045		0.065
b	0.356		0.55	0.014		0.022
b1	0.204		0.304	0.008		0.012
D			10.92			0.430
E	7.95		9.75	0.313		0.384
e		2.54			0.100	
e3		7.62			0.300	
e4		7.62			0.300	
F			6.6			0.260
I			5.08			0.200
L	3.18		3.81	0.125		0.150
Z			1.52			0.060

OUTLINE AND MECHANICAL DATA

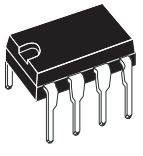

DIP-8

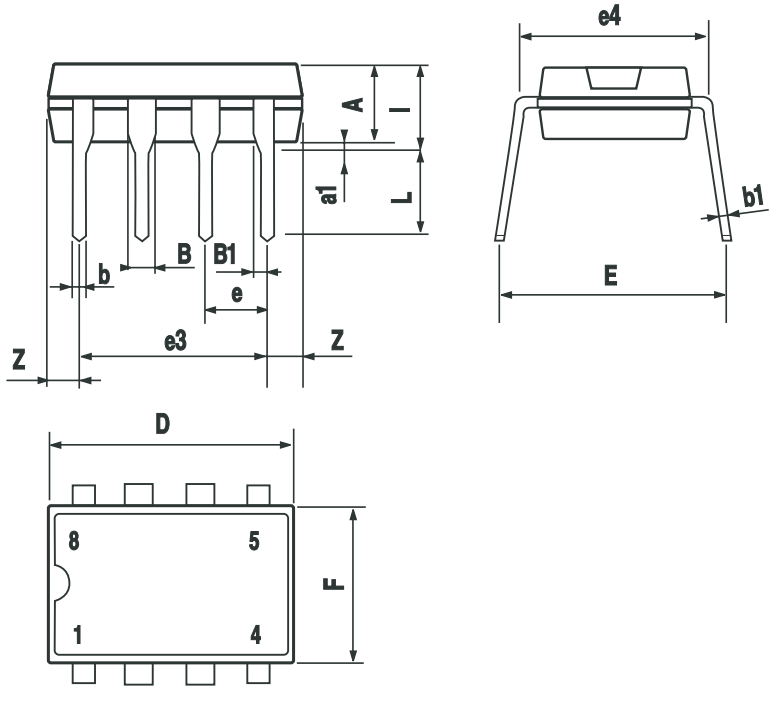

Figure 16. SO8 Mechanical Data & Package Dimensions

DIM.	mm			inch		
	MIN.	TYP.	MAX.	MIN.	TYP.	MAX.
A	1.35		1.75	0.053		0.069
A1	0.10		0.25	0.004		0.010
A2	1.10		1.65	0.043		0.065
B	0.33		0.51	0.013		0.020
C	0.19		0.25	0.007		0.010
D (1)	4.80		5.00	0.189		0.197
E	3.80		4.00	0.15		0.157
e		1.27			0.050	
H	5.80		6.20	0.228		0.244
h	0.25		0.50	0.010		0.020
L	0.40		1.27	0.016		0.050
k	0° (min.), 8° (max.)					
ddd			0.10			0.004

Note: (1) Dimensions D does not include mold flash, protrusions or gate burrs.
Mold flash, potrusions or gate burrs shall not exceed 0.15mm (.006inch) in total (both side).

OUTLINE AND MECHANICAL DATA

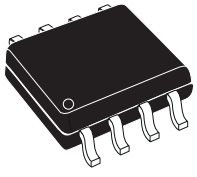

SO-8

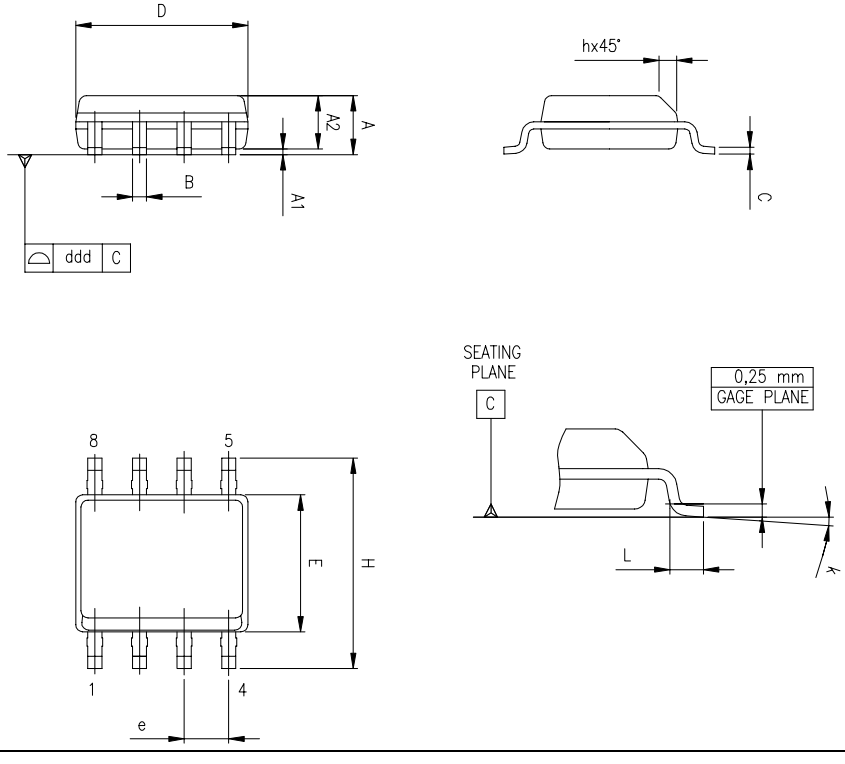

0016023 C

Table 7. Revision History

Date	Revision	Description of Changes
January 2005	1	First Issue
May 2005	2	Changed from Preliminary Data to Final

Information furnished is believed to be accurate and reliable. However, STMicroelectronics assumes no responsibility for the consequences of use of such information nor for any infringement of patents or other rights of third parties which may result from its use. No license is granted by implication or otherwise under any patent or patent rights of STMicroelectronics. Specifications mentioned in this publication are subject to change without notice. This publication supersedes and replaces all information previously supplied. STMicroelectronics products are not authorized for use as critical components in life support devices or systems without express written approval of STMicroelectronics.

The ST logo is a registered trademark of STMicroelectronics.
All other names are the property of their respective owners

© 2005 STMicroelectronics - All rights reserved

STMicroelectronics group of companies
Australia - Belgium - Brazil - Canada - China - Czech Republic - Finland - France - Germany - Hong Kong - India - Israel - Italy - Japan - Malaysia - Malta - Morocco - Singapore - Spain - Sweden - Switzerland - United Kingdom - United States of America
www.st.com