L5962

Multiple linear/switching voltage regulator for car-radio

Features

- Step-down synchronous switching voltage regulator
  - Internal high-side/ Low-side NDMOS
  - 1.2 < V_{out} < 8 V selectable through external resistors
  - 1.2/2.5 A load current selected through dedicated pin
  - 185 kHz free-run frequency
  - SYNC function (220 < f_{sw} < 400 kHz)
- Linear regulators
  - 3.3/5 V @ 150 mA standby regulator selected through dedicated pin (VSTBYSEL)
  - 5/8.5 V @ 350 mA switched linear regulator enabled and selected through I^2C bus (VLR1)
  - 3.3/10 V @ 1 A switched linear regulator enabled and selected through I^2C bus (VLR2)
- 2 High side drivers (0.5 V max drop @ 0.5 A) enabled through I^2C bus and equipped with protection circuit against:
  - short to ground and battery
  - loss of ground and battery
  - unsupplied short to battery
- Reset function with configurable delay (RST, RSTDLY)
- I^2C bus

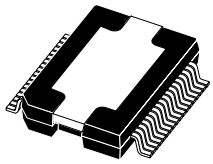

PowerSO36 (slug-up)

- Enable pin to drive switching regulator and I^2C bus logic
- Under/over voltage battery detector (VBATVW)
  - Under voltage threshold adjustable through dedicated pin (LVWIN)
- Load dump protection
- Independent thermal protection on all regulators

Description

L5962 is a very versatile device exploiting BCD technology characteristics to provide a complete set of regulated voltages covering all the needs of a car-radio set.

In standby condition the device guarantees extremely low quiescent current (90 µA max - 40 °C < T < 85 °C) and minimum operating voltage (4.5 V using an external Schottky diode for the back-up function).

Table 1. Device summary

Order code	Package	Packing
L5962	PowerSO36	Tray
L5962TR	PowerSO36	Tape and reel

Contents

1 **Block and application diagram** 5

2 **Pin description** 7

3 **Electrical specification** 9

3.1 Absolute maximum ratings 9

3.2 Thermal data 9

3.3 Electrical characteristics 9

4 **Device description** 15

4.1 Regulators 15

4.1.1 Linear regulators 15

4.1.2 Switching regulator 16

4.2 High side drivers 17

5 **Operating mode** 18

5.1 Battery detection 18

6 **I^2C bus interface** 19

6.1 Data validity 19

6.2 Start and stop conditions 19

6.3 Byte format 19

6.4 Acknowledge 19

7 **Software specifications** 21

8 **Package information** 22

9 **Revision history** 23

List of tables

Table 1. Device summary . . . 1
Table 2. Pin description . . . 7
Table 3. Absolute maximum ratings . . . 9
Table 4. Thermal data . . . 9
Table 5. Electrical characteristics . . . 9
Table 6. Chip address . . . 21
Table 7. IB1 data byte . . . 21
Table 8. VLR2 output level selection . . . 21
Table 9. Document revision history . . . 23

List of figures

Figure 1. Block diagram . . . 5
Figure 2. Application diagram . . . 6
Figure 3. Pin connection (top view) . . . 7
Figure 4. Low voltage warning high level block diagram . . . 18
Figure 5. Data validity on the I^2C bus . . . 19
Figure 6. Timing diagram on the I^2C bus . . . 20
Figure 7. Acknowledge on the I^2C bus . . . 20
Figure 8. PowerSO36 (slug-up) mechanical data and package dimensions . . . 22

1 Block and application diagram

Figure 1. Block diagram

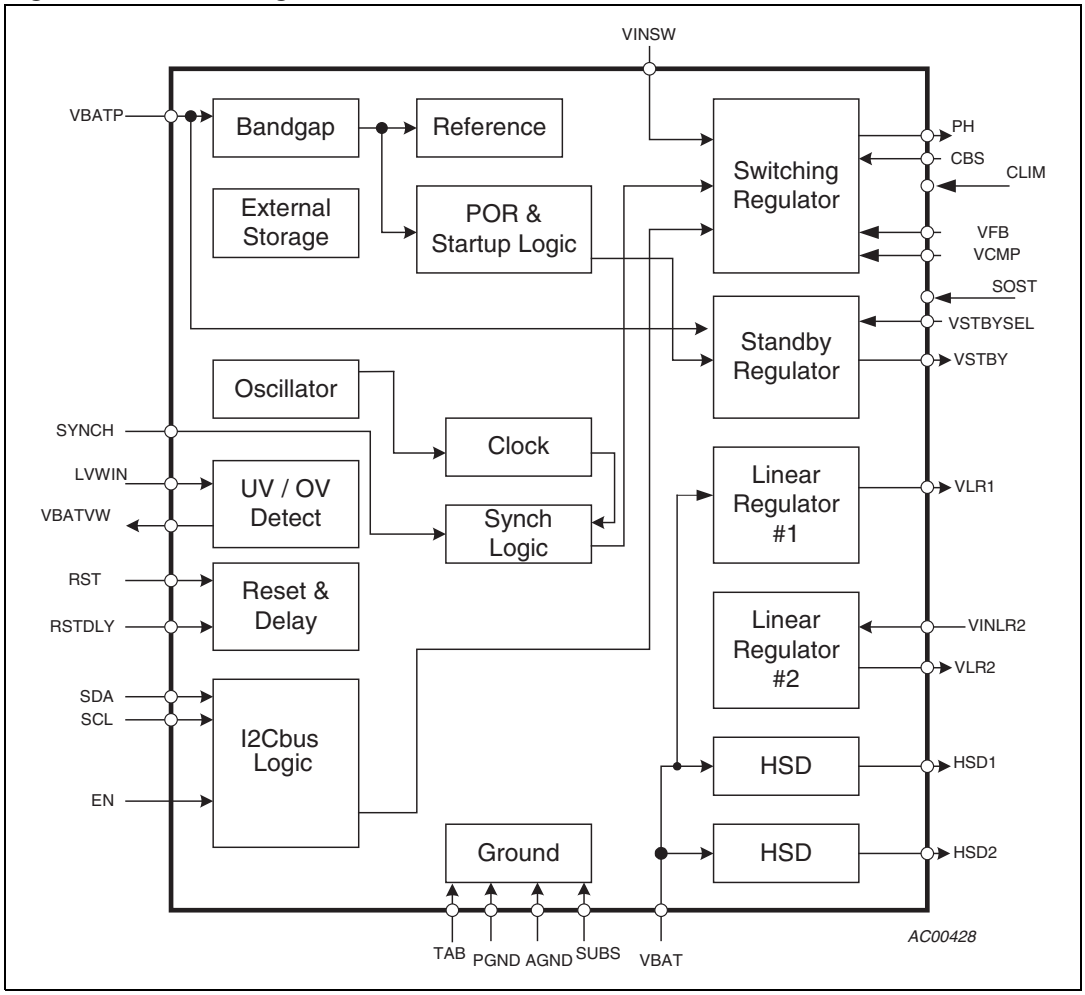

Figure 2. Application diagram

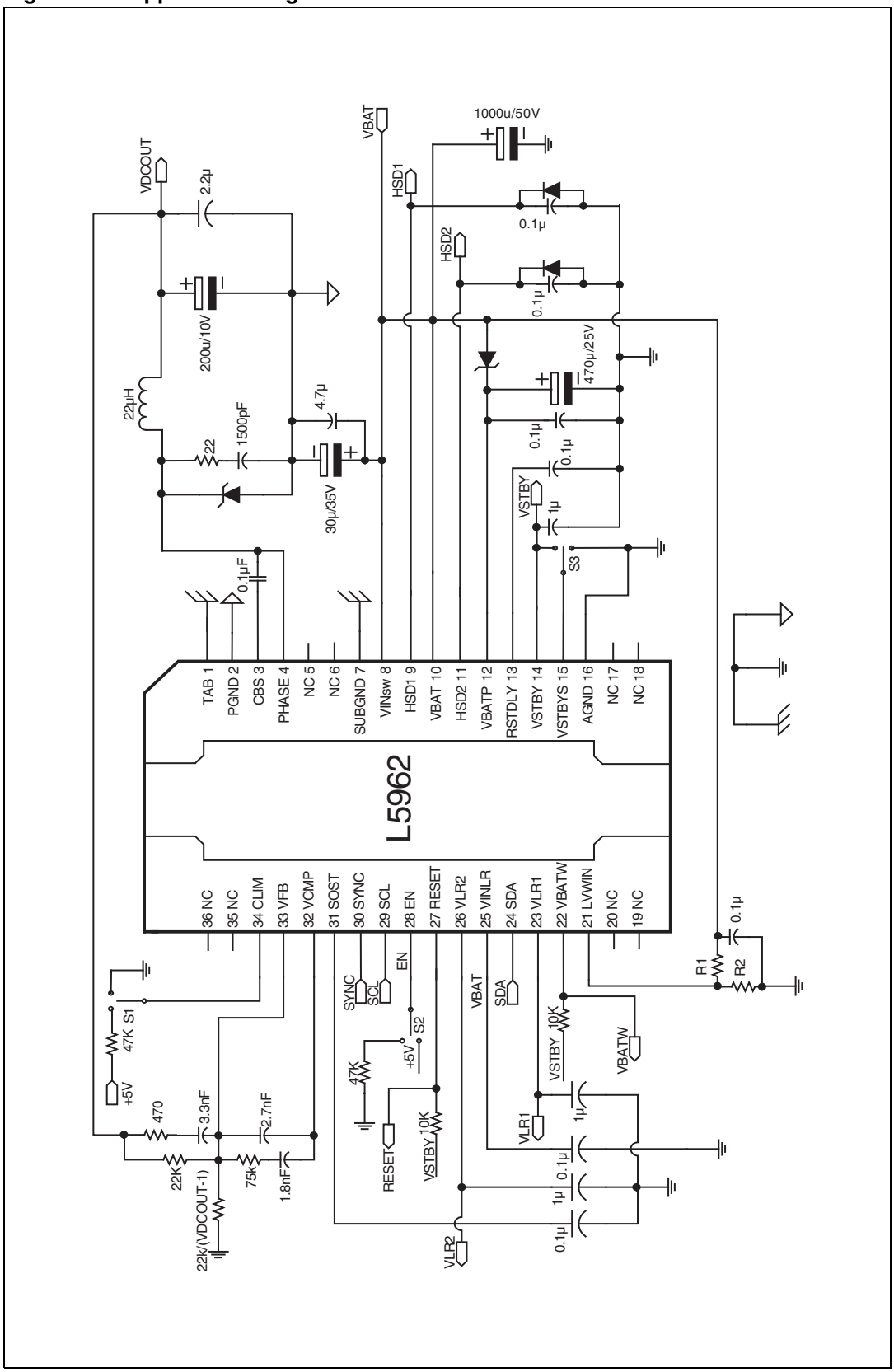

2 Pin description

Figure 3. Pin connection (top view)

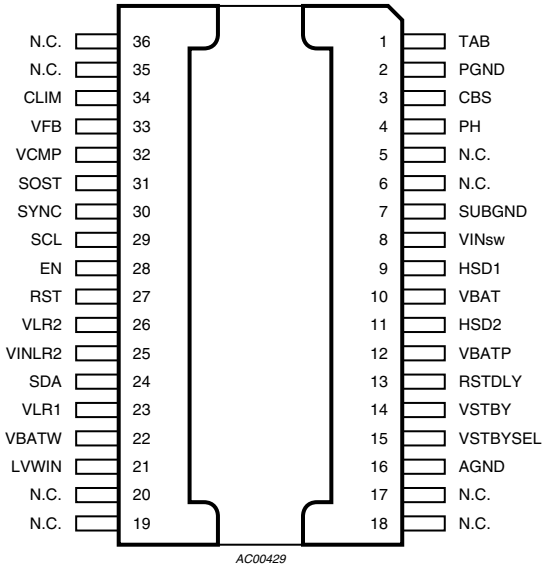

Table 2. Pin description

Pin #	Pad name	Function	Description
1	TAB		This pin must be connected to GND
2	PGND	Switching regulator ground	It is the power ground reference
3	CBS	Bootstrap for switching regulator	Bootstrap capacitor Input for the switching regulator
4	PH	Switching stage output	Phase output. It is the switching output of the switching regulator. It also provides phase reference for bootstrap drive.
5	N.C.	Not connected	-
6	N.C.	Not connected	-
7	SUBGND	Substrate ground	Substrate ground
8	VINsw	Switching regulator supply voltage	Battery voltage for the switching regulator
9	HSD1	High side driver 1	Output of the 1st high side driver
10	VBAT	VLR1/HSD1/HSD2 supply voltage	Voltage input for linear regulator #1 high side driver and battery warnings
11	HSD2	High side driver 2	Output of the 2nd high side driver
12	VBATP	Standby regulator supply voltage	Protected battery input for bias, bandgap, oscillator, and VSTBY regulator
13	RSTDLY	Reset delay function	Input
14	VSTBY	Standby regulator output	Output of the standby regulator

Table 2. Pin description (continued)

Pin #	Pad name	Function	Description
15	VSTBYSEL	Standby regulator selector	Selection input for standby regulator output (3.3 V or 5 V)
16	AGND	Analog ground	Analog voltage reference
17	N.C.	Not connected	-
18	N.C.	Not connected	-
19	N.C.	Not connected	-
20	N.C.	Not connected	-
21	LVWIN	Battery detector adjustment input	Low-voltage warning input
22	VBATW	Battery detector output (open-drain)	Battery voltage warning output
23	VLR1	Switched linear regulator 1	Output of the 1st linear regulator
24	SDA	I^2C bus data	I^2C data line
25	VINLR2	VLR2 supply voltage	Battery supply for the 2nd linear regulator
26	VLR2	Switched linear regulator 2	Output of the 2nd linear regulator
27	RST	Reset	Output
28	EN	Enable	Active mode enable input. Active high
29	SCL	I^2C bus clock	I^2C clock source supplied by the master device
30	SYNC	Switching regulator SYNC function	Synchronization Input
31	SOST	Switching regulator soft-start	Soft start external capacitor
32	VCMP	Switching regulator compensation	Feedback compensation input.
33	VFB	Switching regulator feedback	Regulated output voltage sense
34	CLIM	Switching regulator current limit selector	Choose between two current limits
35	N.C.	Not connected	-
36	N.C.	Not connected	-

3 Electrical specification

3.1 Absolute maximum ratings

Table 3. Absolute maximum ratings

Pin name/Symbol	Parameter	Value	Unit
Vs_{MAX}	Operating supply voltage (VBAT, VBATP, VINSW, VINLR2)	-0.3 to 27	V
	Transient supply voltage (VBAT, VBATP, VINSW, VINLR2)	-0.3 to 50	V
$Vpin_{MAX}$	Input pin voltage (EN, RSTDLY, VSTBYSEL, SYNCH, SCL, SDA, VCMP, VFB, CLIM, SOST)	-0.3 to 6	V
AGND, PGND, SUBGND, TAB	Ground pin voltage	-0.3 to +0.3	V
T_{op}	Operating temperature range	-40 to 85	°C
T_{stg}	Storage temperature range	-55 to 150	°C

3.2 Thermal data

Table 4. Thermal data

Symbol	Parameter	Value	Unit
$R_{th\ j\text{-}case}$	Thermal resistance junction-to-case (max)	2	°C/W

3.3 Electrical characteristics

VBAT= VINSW = VINLR2 = 14.4 V, T_{amb} = 25 °C unless otherwise specified.

Table 5. Electrical characteristics

Symbol	Parameter	Test conditions	Min.	Typ.	Max.	Unit
Input supplies						
V_{min}	VBATP operating voltage	-	4.1	-	-	V
I_q	Total quiescent current	EN = 0; I_{VSTBY}=100 µA @ T = -40 °C @ 25 °C < T < 85 °C	-	-	 90 75	µA
V_{OV}	Overvoltage shut-down	VBAT rising	27	29	31	V
HYS_{OV}	Hysteresis on V_{OV}	-	-	400	-	mV
V_{UV}	VBAT undervoltage threshold	VBAT falling; VBATVW transition to 0 V	7	7.5	8	V

Table 5. Electrical characteristics (continued)

Symbol	Parameter	Test conditions	Min.	Typ.	Max.	Unit
HYS_{UV}	Hysteresis on V_{UV}	-	-	1	-	V
VSTBY (3.3 V)						
$Vout_{VSTBY3}$	Output voltage	$0 < I_{load} < 150$ mA	3.2	3.3	3.4	V
LnR_{VSTBY3}	Line regulation	4.1 <VBATP<18V I_{load}=150mA	-10	-	+50	mV
LdR_{VSTBY3}	Load regulation	$0<I_{load}<150$mA	-	-	20	mV
Vdo_{VSTBY3}	Drop out voltage	I_{load}=150mA	-	-	600	mV
$Ishort_{VSTBY3}$	Short circuit current limit	-	250	-	450	mA
OS/US_{VSTBY3}	Overshoot/Undershoot	I_{load} 0 ↔ 150 mA, t > 50µs C = 1 µF ceramic	-	-	±5	%
$PSRR_{VSTBY3}$	Power supply rejection ratio	I_{load} = 50 mA 120 Hz < f < 10 kHz $VBATP_{ac}$ = 1 Vpp	70	-	-	dB
n_{VSTBY3}	Output noise	A-weighted filter 20 Hz < f < 20 kHz I_{load} = 5 mA	-	-	200	µV
TS_{VSTBY3}	Thermal shut-down temperature	Temperature rising	150	-	190	°C
$HYS_{TS\text{-}VSTBY3}$	Hysteresis on thermal shut-down temperature	-	5	-	15	°C
ESR_{VSTBY3}	External filtering capacitor ESR	C > 0.5 µF	-	-	0.2	Ω
VSTBY (5 V)						
$Vout_{VSTBY5}$	Output voltage	$0 < I_{load} < 150$ mA	4.80	5	5.15	V
LnR_{VSTBY5}	Line regulation	6<VBATP<18V I_{load}=150mA	-10	-	+60	mV
LdR_{VSTBY5}	Load regulation	$0 < I_{load} < 150$ mA	-	-	25	mV
Vdo_{VSTBY5}	Drop out voltage	I_{load} = 150 mA	-	-	600	mV
$Ishort_{VSTBY5}$	Short circuit current limit	-	250	-	450	mA
OS/US_{VSTBY5}	Overshoot/Undershoot	I_{load} 0 ↔ 150 mA, t > 50µs C = 1 µF ceramic	-	-	±5	%
$PSRR_{VSTBY5}$	Power supply rejection ratio	I_{load} = 50 mA 120 Hz < f < 10 kHz $VBATP_{ac}$=1 Vpp	70	-	-	dB
n_{VSTBY5}	Output noise	A-weighted filter 20 Hz < f < 20 kHz I_{load} = 5 mA	-	-	200	µV
TS_{VSTBY5}	Thermal shut-down temperature	Temperature rising	150	-	190	°C
$HYS_{TS\text{-}VSTBY5}$	Hysteresis on thermal shut-down temperature	-	5	-	15	°C
ESR_{VSTBY5}	External filtering capacitor ESR	C > 0.5 µF	-	-	0.2	Ω

Table 5. Electrical characteristics (continued)

Symbol	Parameter	Test conditions	Min.	Typ.	Max.	Unit
VLR1 (5 V)						
$Vout_{VLR1-5}$	Output voltage	$0 < I_{load} < 350$ mA	4.85	5	5.15	V
LnR_{VLR1-5}	Line regulation	6<VBAT<18 V I_{load} =350 mA	-25	-	+25	mV
LdR_{VLR1-5}	Load regulation	$0 < I_{load} < 350$ mA	-90	-	-	mV
Vdo_{VLR1-5}	Drop out voltage	I_{load} = 350 mA	-	-	650	mV
$Ishort_{VLR1-5}$	Short circuit current limit	-	500	650	850	mA
OS/US_{VLR1-5}	Overshoot/Undershoot	I_{load} 0 ↔ 350 mA, t > 50µs C = 1 µF ceramic	-	-	±3	%
$PSRR_{VLR1-5}$	Power supply rejection ratio	I_{load} = 170 mA 120 Hz < f < 10 kHz $VBAT_{ac}$=1 Vpp	60	-	-	dB
n_{VLR1-5}	Output noise	A-weighted filter 20 Hz < f < 20 kHz I_{load} = 5 mA	-	-	350	µV
TS_{VLR1-5}	Thermal shut-down temperature	Temperature rising	150	-	190	°C
$HYS_{TS-VLR1-5}$	Hysteresis on thermal shut-down temperature	-	5	-	15	°C
ESR_{VLR1-5}	External filtering capacitor ESR	C > 0.5 µF	-	-	0.2	Ω
VLR1 (8.5 V)						
$Vout_{VLR1-8}$	Output voltage	$0 < I_{load} < 350$ mA	8.3	8.5	8.7	V
LnR_{VLR1-8}	Line regulation	9.6<VBAT<18VI_{load}=350mA	-25	-	+25	mV
LdR_{VLR1-8}	Load regulation	$0 < I_{load} < 350$ mA	-90	-	-	mV
Vdo_{VLR1-8}	Drop out voltage	I_{load} = 350 mA	-	-	650	mV
$Ishort_{VLR1-8}$	Short circuit current limit	-	500	650	850	mA
OS/US_{VLR1-8}	Overshoot / undershoot	I_{load} 0 ↔ 350 mA, t > 50µs C = 1 µF ceramic	-	-	±3	%
$PSRR_{VLR1-8}$	Power supply rejection ratio	I_{load} = 170 mA 120 Hz < f < 10 kHz $VBAT_{ac}$=1 Vpp	60	-	-	dB
n_{VLR1-8}	Output noise	A-weighted filter 20 Hz < f < 20 kHz I_{load} = 5 mA	-	-	350	µV
TS_{VLR1-8}	Thermal shut-down temperature	Temperature rising	150	-	190	°C
$HYS_{TS-VLR1-8}$	Hysteresis on thermal shut-down temperature	-	5	-	15	°C
ESR_{VLR1-8}	External filtering capacitor ESR	C > 0.5 µF	-	-	0.2	Ω

Table 5. Electrical characteristics (continued)

Symbol	Parameter	Test conditions	Min.	Typ.	Max.	Unit
VLR2 (3.3 V)						
$Vout_{VLR2-3}$	Output voltage	$0 < I_{load} < 1$ A	3.2	3.3	3.4	V
LnR_{VLR2-3}	Line regulation	4.5 < VINLR2 < 18 V I_{load} = 1 A	-20	-	+20	mV
LdR_{VLR2-3}	Load regulation	$0 < I_{load} < 1$ A	-70	-	-	mV
Vdo_{VLR2-3}	Drop out voltage	I_{load} = 1 A	-	-	1.2	V
$Ishort_{VLR2-3}$	Short circuit current limit		1.5	-	2.5	A
OS/US_{VLR2-3}	Overshoot / undershoot	I_{load} 0 ↔ 1A, t > 50µs C = 1 µF ceramic	-	-	±3	%
$PSRR_{VLR2-3}$	Power supply rejection ratio	I_{load} = 500 mA 120 Hz < f < 10 kHz $VINLR2_{ac}$=1 Vpp	60	-	-	dB
n_{VLR2-3}	Output noise	A-weighted filter 20Hz<f<20kHz I_{load}=5mA	-	-	350	µV
TS_{VLR2-3}	Thermal shut-down temperature	Temperature rising	150	-	190	°C
$HYS_{TS-VLR2-3}$	Hysteresis on thermal shut-down temperature	-	5	-	15	°C
ESR_{VLR2-3}	External filtering capacitor ESR	C>0.5µF	-	-	0.2	Ω
VLR2 (10 V)						
$Vout_{VLR2-10}$	Output voltage	$0<I_{load}<1$ A	9.7	10	10.3	V
$LnR_{VLR2-10}$	Line regulation	11.4<VBAT<18 V I_{load}=1 A	-25	-	+25	mV
$LdR_{VLR2-10}$	Load regulation	$0<I_{load}<1$ A	-70	-	-	mV
$Vdo_{VLR2-10}$	Drop out voltage	I_{load}=1 A	-	-	0.75	V
$Ishort_{VLR2-10}$	Short circuit current limit		1.5	-	2.5	A
$OS/US_{VLR2-10}$	Overshoot / undershoot	I_{load} 0 ↔ 1 A, t > 50 µs C = 1 µF ceramic	-	-	±3	%
$PSRR_{VLR2-10}$	Power supply rejection ratio	I_{load} = 500 mA 120 Hz<f<10 kHz $VINLR2_{ac}$=1 Vpp	60	-	-	dB
$n_{VLR2-10}$	Output noise	A-weighted filter 20 Hz < f < 20 kHz I_{load} = 5 mA	-	-	350	µV
$TS_{VLR2-10}$	Thermal shut-down temperature	Temperature rising	150	-	190	°C
$HYS_{TS-VLR2-10}$	Hysteresis on thermal shut-down temperature	-	5	-	15	°C
$ESR_{VLR2-10}$	External filtering capacitor ESR	C > 0.5 µF	-	-	0.2	Ω

Table 5. Electrical characteristics (continued)

Symbol	Parameter	Test conditions	Min.	Typ.	Max.	Unit
HSD1						
$Vdrop_{HSD1}$	Output saturation	I_{load} = 0.5 A	-	-	500	mV
$Ileak_{HSD1}$	Leakage current	HSD off output shorted to GND	-	-	10	µA
$Ishort_{HSD1}$	Short circuit current limit	-	0.75	-	1.5	A
TS_{HSD1}	Thermal shut-down temperature	Temperature rising	150	-	190	°C
$HYS_{TS-HSD1}$	Hysteresis on thermal shut-down temperature	-	5	-	15	°C
HSD2						
$Vdrop_{HSD2}$	Output saturation	I_{load} = 0.5 A	-	-	500	mV
$Ileak_{HSD2}$	Leakage current	HSD off output shorted to GND	-	-	10	µA
$Ishort_{HSD2}$	Short circuit current limit	-	0.75	-	1.5	A
TS_{HSD2}	Thermal shut-down temperature	Temperature rising	150	-	190	°C
$HYS_{TS-HSD2}$	Hysteresis on thermal shut-down temperature	-	5	-	15	°C
Switching regulator						
$Vout_{SW}$	Output voltage	Selectable through external resistor divider	1.2	-	8	V
$I_{LOADmaxSW}$	Load current limitation	V_{outSW} decreasing of 100 mV (1) CLIM = 0 V CLIM = 5 V	 1.2 2.5	-	 3 6	A
f_{sw}	Free-run switching frequency	-	150	180	210	kHz
V_{FB}	FB voltage	-	970	-	1030	mV
$Vdrop_{SW}$	Dropout voltage	$Vout_{SW}$ = 8 V $Iload_{SW}$ = 2.5 A(1)	-	-	1.2	V
f_{SYNC}	Switching frequency selectable through SYNC pin	-	220	-	400	kHz
η	Efficiency	free run frequency (1) V_{outSW} = 8 V; I_{load} = 2.5 A	85	-	-	%
SR_{SS}	Soft-start pin slew rate	C_{SOST} = 10 nF (1)	-	-	10	V/ms
TS_{SW}	Thermal shut-down temperature	Temperature rising	150	-	190	°C
HYS_{SW}	Hysteresis on thermal shut-down temperature	-	5	-	15	°C

Table 5. Electrical characteristics (continued)

Symbol	Parameter	Test conditions	Min.	Typ.	Max.	Unit
Reset function						
THR_{RST}	Reset threshold on VSTBY	VSTBY = 3.3 V	93	-	98	%
HYS_{RST}	Hysteresis on RST	-	30	-	150	mV
$Vsat_{RST}$	RST pin saturation voltage	I_{RST} = 0.5 mA	-	-	0.4	V
DLY_{RST}	RST delay time	C = 100 pF on RSTDLY pin	25	-	75	µs
$Tfall_{RST}$	RST fall time	R = 47 kΩ C = 50 pF	-	-	1	µs
$Tglitch_{RST}$	Glitch filter time for RST	-	5	-	20	µs
THR_{RSTDLY}	RSTDLY pin threshold	RST falling	3	-	3.7	V
I_{RSTDLY}	RSTDLY output current	RSTDLY = Off	7	-	13	µA
Controls						
THR_{EN}	EN minimum level recognized as high	-	2	-	-	V
	EN maximum level recognized as low	-		-	0.8	V
HYS_{EN}	Hysteresis on EN	-	150	-	-	mV
$leak_{EN}$	EN pin leakage current	-	-1	-	1	µA
THR_{CLIM}	CLIM pin threshold	-	0.8	-	-	V
		-		-	2	
$leak_{CLIM}$	CLIM pin leakage current	-	-1	-	1	µA
THR_{LVWIN}	LVWIN threshold	-	1.225	-	1.275	V
$HYST_{LVWIN}$	LVWIN hysteresis	-	100	-	200	mV
I^2C bus						
THR_{SCL}	CLOCK minimum level recognized as High	-	2.2	-	-	V
	CLOCK maximum level recognized as low	-	-	-	0.8	V
THR_{SDA}	DATA minimum level recognized as High	-	2.2	-	-	V
	DATA maximum level recognized as low	-	-	-	0.8	V
f_{SCL}	Clock frequency	-	-	-	400	kHz

1. by bench characterization

4 Device description

The IC includes one standby regulator, always active to guarantee the standby functions; two switched linear regulators, managed by the I^2C bus and a step-down switching voltage regulator with selectable current limit.

4.1 Regulators

The VSTBY regulator is always active when the IC is supplied.

The other regulators can be enabled or disabled. Their outputs are automatically disabled whenever the VBAT voltage exceeds the over-voltage shutdown threshold. Upon return from over-voltage shutdown, the outputs recover without intervention from the system.

4.1.1 Linear regulators

VSTBY (3.3 V / 5.0 V standby)

VSTBY is a linearly regulated 3.3/5 V output. This output is enabled on battery connect. It is supplied from the protected battery input (VBATP).

In order to select the 3.3 V output, the VSTBYSEL pin must be connected to ground.

In order to select the 5.0 V output, the VSTBYSEL pin must be connected to 5 V.

When the dropout voltage of the regulator cannot be maintained, the output shall track the VBATP input voltage less the saturation voltage of the regulator pass element.

This regulator has a short circuit protection consisting of current limit, and thermal shutdown. If the local die temperature exceeds the thermal shutdown detection threshold, the output is disabled. The thermal shutdown circuitry has hysteresis such that the output is enabled only after the die temperature falls below the thermal shutdown disable threshold. Thermal shutdown on this output doesn't directly disable any other circuitry.

RST provides an indication that VSTBY is in regulation. It is an open drain output used to indicate that VSTBY is in regulation (below the low-voltage threshold). RST remains low until VSTBY achieves regulation and the RSTDLY input has charged to its threshold. For instance, RST remains low during battery connect and disconnect and under low-voltage battery lockout. The transition from standby mode to active mode (and vice versa) does not cause the RST output to be triggered.

RSTDLY provides a means to delay the releasing of RST once VSTBY has achieved regulation. It is used to delay the release of RST when VSTBY achieves regulation. This input has a current source to charge an external capacitor and an internal pull-down to discharge the external capacitor. The voltage on this capacitor is used to control the operation of the RST output.

The RSTDLY pull-down is activated when a loss of regulation is detected. The input remains low until VSTBY once again achieves regulation.

When the RSTDLY is released the current source charges the external capacitor. When the voltage exceeds the pin's threshold, RST pin is also released, disabling its pull-down.

VLR1 (5.0 V /8.5 V) and VLR2 (3.3 V, 5.0 V, 5.5 V, 6.0 V, 7.0 V, 7.5 V, 8.0 V, 10.0 V)

The output of these two regulators can be selected through the I^2C bus.

When the dropout voltage of the regulator cannot be maintained, the output tracks the VBAT input voltage less the saturation voltage of the regulator pass element.

This regulator has a short circuit protection consisting of current limit and thermal shutdown. If the local die temperature exceeds the thermal shutdown detection threshold, the output is disabled. The thermal shutdown circuitry has hysteresis such that the output is enabled only after the die temperature falls below the thermal shutdown disable threshold. Thermal shutdown on this output doesn't directly disable any other circuitry.

VLR2 has its own power supply (VINLR2) because of its high current capability.

4.1.2 Switching regulator

The IC contains an independent, step-down, synchronous switching regulator, which is used to produce an output voltage that is adjustable in the system by means of an external resistor divider.

The switching regulator functionality is guaranteed in the 1.2-8.0 V output voltage range. The switching frequency is externally synchronizable. The switcher has its own supply input pin (VINSW) and is enabled by the EN input.

The regulator contains soft-start control to protect external devices from excessive in-rush currents. This control is independent of the presence of a synchronizing signal on the SYNCH input.

The switching cycle is synchronized to the internal oscillator unless a signal is present on the SYNC input. The signal present on the SYNCH input overrides the internal oscillator to control the switching of the regulator if its frequency gets inside the allowed range (220-400 kHz). The IC detects a small number of edges (e.g. 2-5) prior to recognize a valid input signal and synchronizing internal operation to the external signal.

It is designed to operate in continuous conduction mode (CCM), where the inductor current remains continuous throughout the entire load range of the output. It can also work in DCM mode.

This regulator has short circuit protection consisting of cycle-by-cycle duty-cycle limitation.

Upon return from over-voltage shutdown this regulator employs the soft-start.

An external bootstrap capacitor must be connected between the output (PH, phase output pin) and the CBS pin.

The switching regulator output slew rate can be controlled with an external capacitor on the SOST (soft start) pin. This protects the device against excessive dV/dt transients, lowering the stress of the internal components. A maximum slews rate of 10 V/ms is suggested.

Two separate current limits for the switching regulator can be chosen in order to guarantee a proper protection for the device at the desired load current rating. The CLIM pin should be tied to ground for the low limit (max 3 A) or to 5.0 V for the high limit (max 6 A).

The VFB pin is the voltage feedback from the regulated output for the switching regulator; the VCMP one is the compensation feedback for the switching regulator.

4.2 High side drivers

The device embeds fully-protected high-side drivers for use outside of the car-radio module.

HSD1, HSD2

These high side driver outputs have short circuit protections consisting of current limit and independent thermal shutdown. If the local die temperature exceeds the thermal shutdown detection threshold, the output is disabled. The thermal shutdown circuitry has hysteresis such that the output is enabled only after the die temperature falls below the thermal shutdown disable threshold. Thermal shutdown on any one output doesn't directly disable any other circuitry.

HSD1 and HSD2 are protected from shorts to ground and shorts to battery (0-18 V) during a loss of car-radio module battery.

5 Operating mode

When a power source is connected to the IC, the internal circuitry begins to establish internal bias, the bandgap reference voltage, and other related functions. The standby (VSTBY) regulator and battery detection are functional.

The standby mode is activated when the enable (EN) input is asserted low.

When the enable (EN) input is set high (EN =1: active mode.), the IC exits the standby mode and enters the active mode.

During active mode, I2C interface is activated and all functions are operational. The IC remains in active mode until either the standby regulator falls out of regulation (where the IC enters the low-voltage reset state) or until the enable (EN) input is brought back to 0 V (where the IC enters the standby state).

5.1 Battery detection

The operating voltage for VLR1, high side drivers and battery warnings is provided by VBAT pin. This input is also used as reference to detect an over-voltage or an under-voltage condition. When such condition is detected, the VBATVW output is pulled down. The overvoltage detection circuit has hysteresis for noise rejection.

Two external resistors (Rext1, Rext2), whose values are lower than 100 kohm, are connected to the LWIN (low warning input) pin to give the possibility to trim the threshold at which the low voltage warning comparator triggers. When LVWIN voltage is below the input voltage threshold (1.25 V typ), the VBATW (battery voltage warning) output is pulled down and a low-voltage warning is indicated. When no external resistor network is connected to LVWIN, the detector sets the threshold to a nominal 7.5 V.

No external interaction is required to reset the output state, because it is automatically reset when the fault condition is removed.

Figure 4 shows an high level block diagram of the low-voltage warning circuit. VBAT is divided by two internal resistors (Rint1, Rint2) and two external programming resistors (Rext1, Rext2). When VBAT decreases so that LVWIN voltage gets lower than the internal reference (VBG), VBATW is pulled down to ground.

Figure 4. Low voltage warning high level block diagram

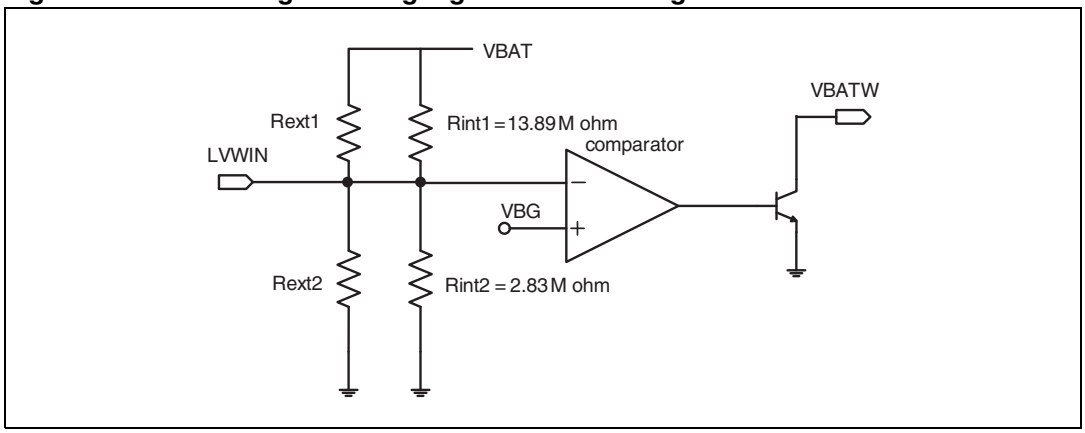

6 I²C bus interface

Data transmission from microprocessor to the L5962 and viceversa takes place through the 2 wires I²C bus interface, consisting of the two lines SDA and SCL (pull-up resistors to positive supply voltage must be connected).

6.1 Data validity

As shown by *Figure 5*, the data on the SDA line must be stable during the high period of the clock. The HIGH and LOW state of the data line can only change when the clock signal on the SCL line is LOW.

6.2 Start and stop conditions

As shown by *Figure 6* a start condition is a HIGH to LOW transition of the SDA line while SCL is HIGH. The stop condition is a LOW to HIGH transition of the SDA line while SCL is HIGH.

6.3 Byte format

Every byte transferred to the SDA line must contain 8 bits. Each byte must be followed by an acknowledge bit. The MSB is transferred first.

6.4 Acknowledge

The transmitter* puts a resistive HIGH level on the SDA line during the acknowledge clock pulse (see *Figure 6*). The receiver** the acknowledges has to pull-down (LOW) the SDA line during the acknowledge clock pulse, so that the SDAline is stable LOW during this clock pulse.

* Transmitter

- master (µP) when it writes an address to the L5962
- slave (L5962) when the µP reads a data byte from L5962

** Receiver

- slave (L5962) when the µP writes an address to the L5962
- master (µP) when it reads a data byte from L5962

Figure 5. Data validity on the I²C bus

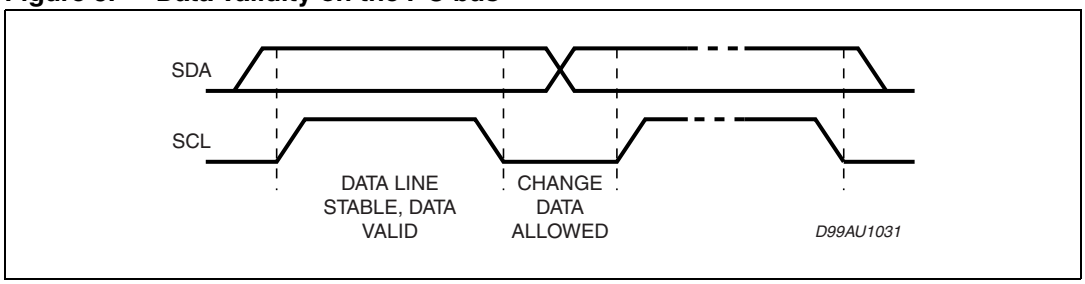

Figure 6. Timing diagram on the I²C bus

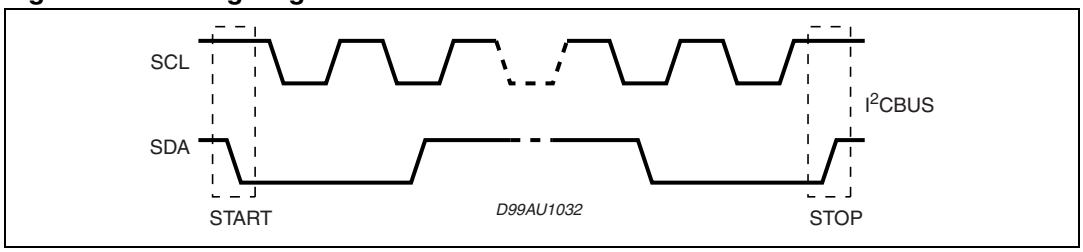

Figure 7. Acknowledge on the I²C bus

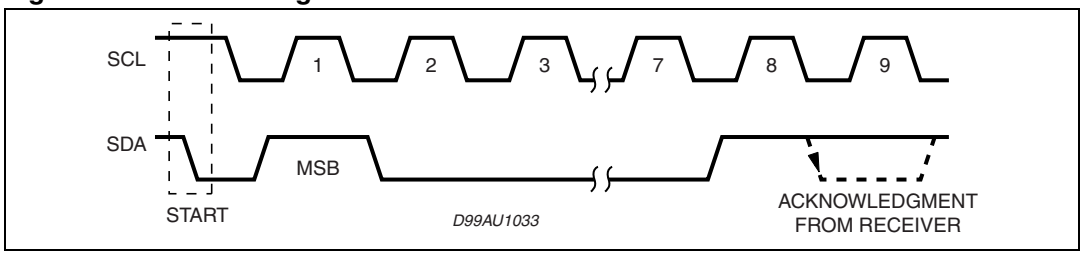

7 Software specifications

Table 6. Chip address

D7 (MSB)							D0 (LSB)	
0	0	0	1	0	0	0	R/W	10 Hex

IC functions can be driven sending one data byte IB1

Table 7. IB1 data byte

Bit position	Bit name	Function description
D7	VLR2EN	VLR2 enable
D6	VLR2SEL2	VLR2 selection
D5	VLR2SEL1	
D4	VLR2SEL0	
D3	VLR1EN	VLR1 enable
D2	VLR1SEL	VLR1 selection
D1	HSD2EN	HSD2 enable
D0	HSD1EN	HSD1 enable

Bits D6-D4 are used to select VLR2 output voltage according to the following table

Table 8. VLR2 output level selection

VLR2SEL2	VLR2SEL1	VLR2SEL0	VLR2 output voltage
0	0	0	3.3V
0	0	1	5.0V
0	1	0	5.5V
0	1	1	6.0V
1	0	0	7.0V
1	0	1	7.5V
1	1	0	8.0V
1	1	1	10.0V

8 Package information

In order to meet environmental requirements, ST offers these devices in different grades of ECOPACK® packages, depending on their level of environmental compliance. ECOPACK® specifications, grade definitions and product status are available at: *www.st.com*.

ECOPACK® is an ST trademark.

Figure 8. PowerSO36 (slug-up) mechanical data and package dimensions

DIM.	mm			inch		
	MIN.	TYP.	MAX.	MIN.	TYP.	MAX.
A	3.270	-	3.410	0.1287	-	0.1343
A2	3.100	-	3.180	0.1220	-	0.1252
A4	0.800	-	1.000	0.0315	-	0.0394
A5	-	0.200	-	-	0.0079	-
a1	0.030	-	-0.040	0.0012	-	-0.0016
b	0.220	-	0.380	0.0087	-	0.0150
c	0.230	-	0.320	0.0091	-	0.0126
D	15.800	-	16.000	0.6220	-	0.6299
D1	9.400	-	9.800	0.3701	-	0.3858
D2	-	1.000	-	-	0.0394	-
E	13.900	-	14.500	0.5472	-	0.5709
E1	10.900	-	11.100	0.4291	-	0.4370
E2	-	-	2.900	-	-	0.1142
E3	5.800	-	6.200	0.2283	-	0.2441
E4	2.900	-	3.200	0.1142	-	0.1260
e	-	0.650	-	-	0.0256	-
e3	-	11.050	-	-	0.4350	-
G	0	-	0.075	0	-	0.0031
H	15.500	-	15.900	0.6102	-	0.6260
h	-	-	1.100	-	-	0.0433
L	0.800	-	1.100	0.0315	-	0.0433
N	-	-	10°	-	-	10°
s	-	-	8°	-	-	8°

(1) "D and E1" do not include mold flash or protusions.
Mold flash or protusions shall not exceed 0.15mm (0.006").
(2) No intrusion allowed inwards the leads.

OUTLINE AND MECHANICAL DATA

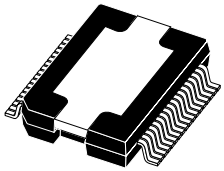

PowerSO36 (SLUG UP)

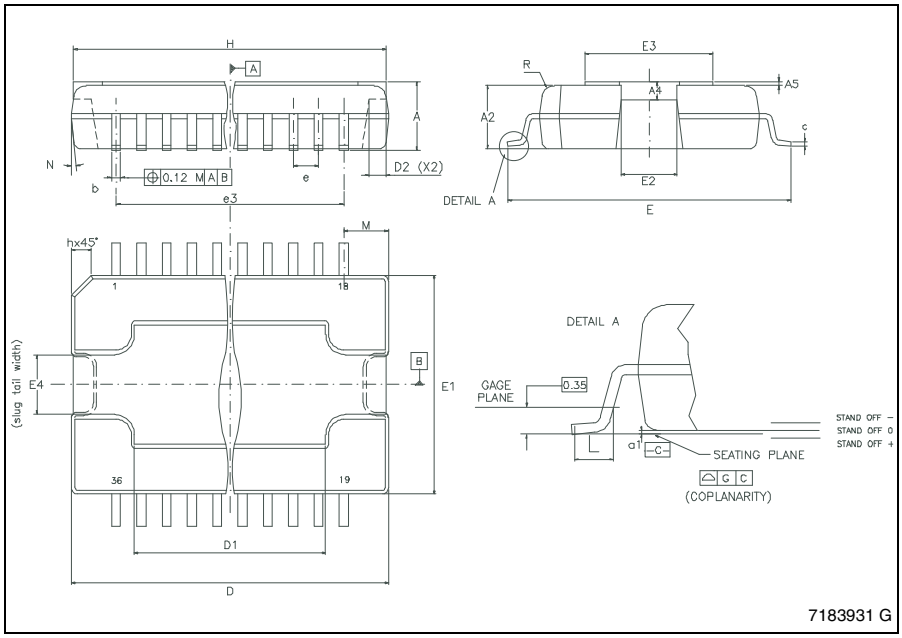

9 Revision history

Table 9. Document revision history

Date	Revision	Changes
24-Nov-2009	1	Initial release.
10-Dec-2009	2	Updated *Figure 8: PowerSO36 (slug-up) mechanical data and package dimensions on page 22*.
18-Sep-2013	3	Updated Disclaimer.

Please Read Carefully:

Information in this document is provided solely in connection with ST products. STMicroelectronics NV and its subsidiaries (“ST”) reserve the right to make changes, corrections, modifications or improvements, to this document, and the products and services described herein at any time, without notice.

All ST products are sold pursuant to ST’s terms and conditions of sale.

Purchasers are solely responsible for the choice, selection and use of the ST products and services described herein, and ST assumes no liability whatsoever relating to the choice, selection or use of the ST products and services described herein.

No license, express or implied, by estoppel or otherwise, to any intellectual property rights is granted under this document. If any part of this document refers to any third party products or services it shall not be deemed a license grant by ST for the use of such third party products or services, or any intellectual property contained therein or considered as a warranty covering the use in any manner whatsoever of such third party products or services or any intellectual property contained therein.

UNLESS OTHERWISE SET FORTH IN ST’S TERMS AND CONDITIONS OF SALE ST DISCLAIMS ANY EXPRESS OR IMPLIED WARRANTY WITH RESPECT TO THE USE AND/OR SALE OF ST PRODUCTS INCLUDING WITHOUT LIMITATION IMPLIED WARRANTIES OF MERCHANTABILITY, FITNESS FOR A PARTICULAR PURPOSE (AND THEIR EQUIVALENTS UNDER THE LAWS OF ANY JURISDICTION), OR INFRINGEMENT OF ANY PATENT, COPYRIGHT OR OTHER INTELLECTUAL PROPERTY RIGHT.

ST PRODUCTS ARE NOT DESIGNED OR AUTHORIZED FOR USE IN: (A) SAFETY CRITICAL APPLICATIONS SUCH AS LIFE SUPPORTING, ACTIVE IMPLANTED DEVICES OR SYSTEMS WITH PRODUCT FUNCTIONAL SAFETY REQUIREMENTS; (B) AERONAUTIC APPLICATIONS; (C) AUTOMOTIVE APPLICATIONS OR ENVIRONMENTS, AND/OR (D) AEROSPACE APPLICATIONS OR ENVIRONMENTS. WHERE ST PRODUCTS ARE NOT DESIGNED FOR SUCH USE, THE PURCHASER SHALL USE PRODUCTS AT PURCHASER’S SOLE RISK, EVEN IF ST HAS BEEN INFORMED IN WRITING OF SUCH USAGE, UNLESS A PRODUCT IS EXPRESSLY DESIGNATED BY ST AS BEING INTENDED FOR “AUTOMOTIVE, AUTOMOTIVE SAFETY OR MEDICAL” INDUSTRY DOMAINS ACCORDING TO ST PRODUCT DESIGN SPECIFICATIONS. PRODUCTS FORMALLY ESCC, QML OR JAN QUALIFIED ARE DEEMED SUITABLE FOR USE IN AEROSPACE BY THE CORRESPONDING GOVERNMENTAL AGENCY.

Resale of ST products with provisions different from the statements and/or technical features set forth in this document shall immediately void any warranty granted by ST for the ST product or service described herein and shall not create or extend in any manner whatsoever, any liability of ST.

ST and the ST logo are trademarks or registered trademarks of ST in various countries.
Information in this document supersedes and replaces all information previously supplied.
The ST logo is a registered trademark of STMicroelectronics. All other names are the property of their respective owners.

© 2013 STMicroelectronics - All rights reserved

STMicroelectronics group of companies

Australia - Belgium - Brazil - Canada - China - Czech Republic - Finland - France - Germany - Hong Kong - India - Israel - Italy - Japan - Malaysia - Malta - Morocco - Philippines - Singapore - Spain - Sweden - Switzerland - United Kingdom - United States of America

www.st.com