L4949ED-E
L4949EP-E

Automotive multifunction very low drop voltage regulator

Datasheet - production data

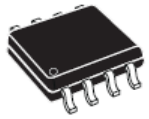

SO-8

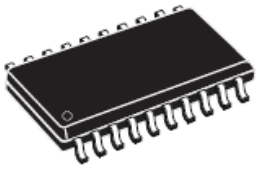

SO-20W (12+4+4)

Description

The L4949ED-E and L4949EP-E are monolithic integrated 5V voltage regulators with a very low dropout output and additional functions as power-on reset and input voltage sense. They are designed for supplying the microcomputer controlled systems especially in automotive applications.

Features

- AEC-Q100 qualified
- ECOPACK®: lead free and RoHS compliant
- Operating DC supply voltage range 5 V - 28 V
- Transient supply voltage up to 40 V
- Extremely low quiescent current in standby
- High precision standby output voltage 5V±1%
- Output current capability up to 100 mA
- Very low dropout voltage less than 0.5 V
- Reset circuit sensing the output voltage
- Programmable reset pulse delay with external capacitor
- Voltage sense comparator
- Thermal shutdown and short circuit protections

Table 1. Device summary

Package	Order codes	
	Tube	Tape and Reel
SO-8	-	L4949EDTR-E
SO-20W	L4949EP-E	L4949EPTR-E

This is information on a product in full production. www.st.com

Contents

1 Block diagram and pin description 5

2 Electrical specifications 7

2.1 Absolute maximum ratings 7

2.2 Thermal data 7

2.3 Electrical characteristics 8

3 Application information 10

3.1 Supply voltage transient 10

3.2 Functional description 10

3.3 Voltage regulator 11

3.4 Preregulator 12

3.5 Reset circuit 13

3.6 Sense comparator 13

4 Package and packing information 15

4.1 ECOPACK® packages 15

4.2 SO-8 TP package information 15

4.3 SO-20 TP package information 16

5 Revision history 18

List of tables

Table 1. Device summary . . . 1
Table 2. Pin definitions and functions . . . 6
Table 3. Absolute maximum ratings . . . 7
Table 4. Thermal data . . . 7
Table 5. Electrical characteristics . . . 8
Table 6. Reset . . . 8
Table 7. Sense . . . 9
Table 8. Preregulator . . . 9
Table 9. SO-8 TP mechanical data . . . 15
Table 10. SO-20 TP mechanical data . . . 16
Table 11. Document revision history . . . 18

List of figures

Figure 1. Block diagram . . . 5
Figure 2. Configuration diagram (top view) . . . 5
Figure 3. Application circuit . . . 10
Figure 4. Foldback characteristic of V_O . . . 11
Figure 5. Output voltage vs input voltage . . . 12
Figure 6. Quiescent current vs supply voltage . . . 12
Figure 7. Block circuit of reset circuit . . . 14
Figure 8. Waveforms . . . 14
Figure 9. SO-8 TP package dimensions . . . 16
Figure 10. SO20 TP package dimensions . . . 17

1 Block diagram and pin description

Figure 1. Block diagram

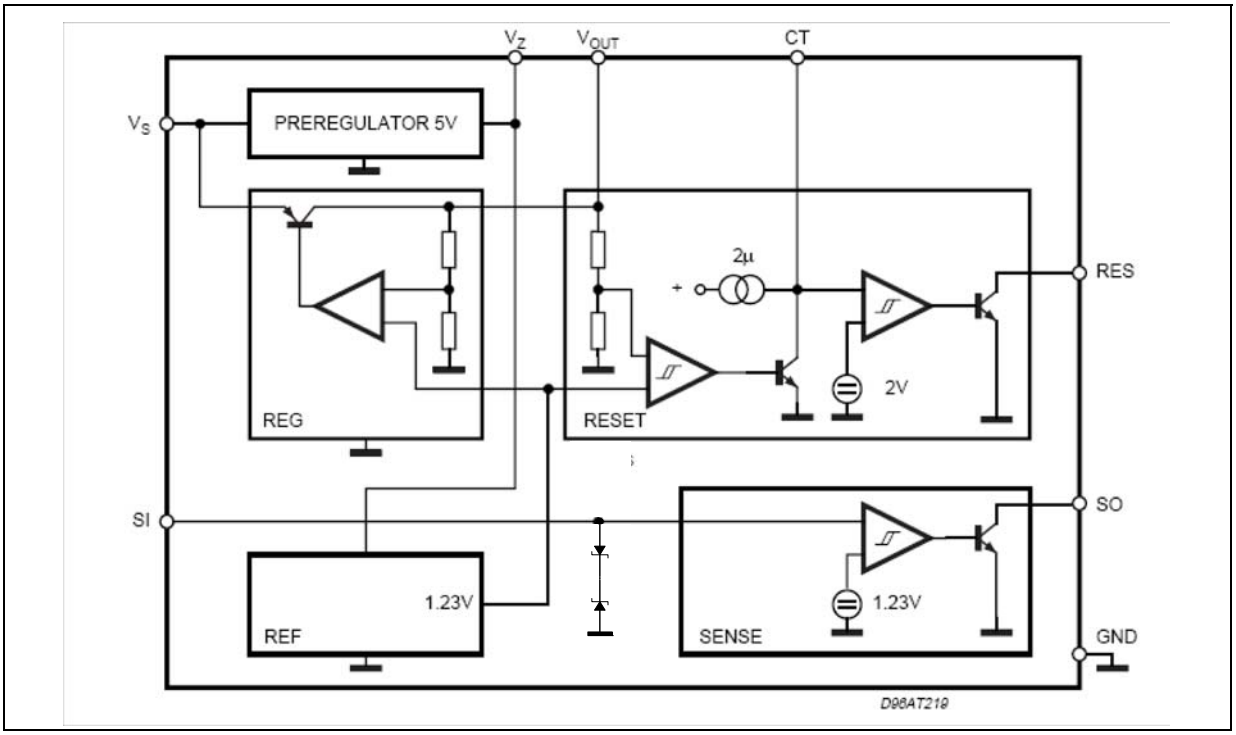

Note: The block diagram illustrates only a major internal device functionality and it is not intended to mimic any details of hardware design

Figure 2. Configuration diagram (top view)

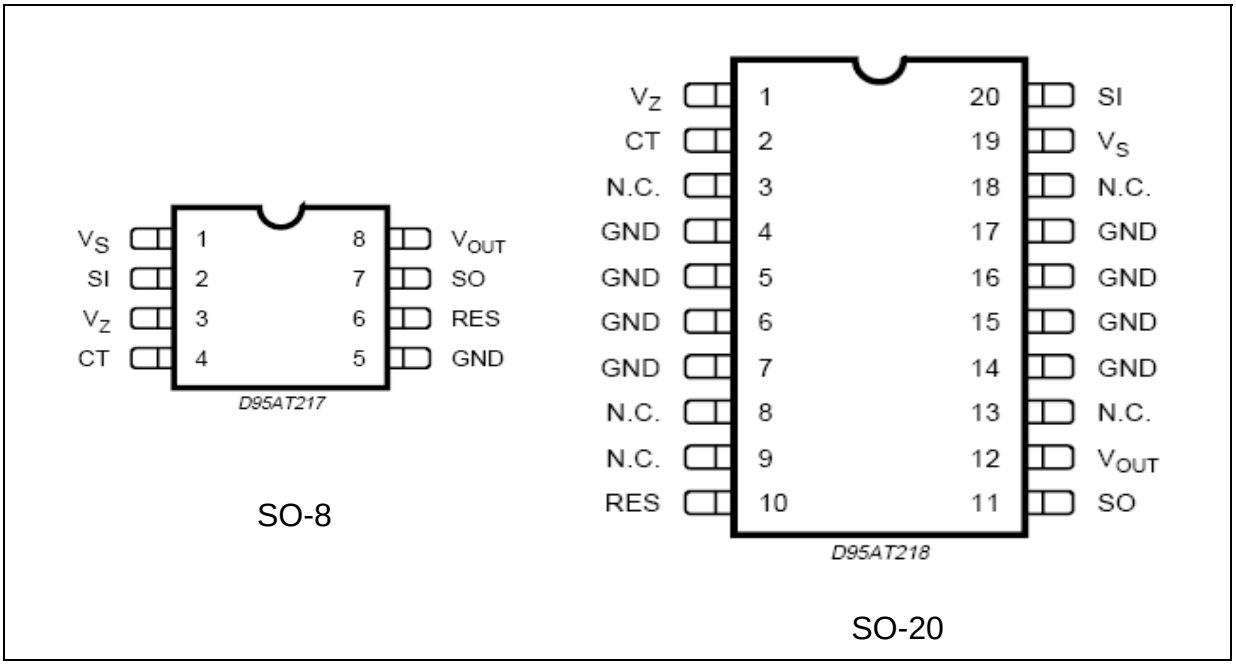

Table 2. Pin definitions and functions

Pin N°		Symbol	Function
SO-8	SO-20		
1	19	V_S	Input supply voltage. Block to GND via an external capacitor (see *Figure 3*).
2	20	S_I	Sense input pin to supervise input voltage. Connect via an external voltage divider connected to V_S and to GND.
3	1	V_Z	Preregulator output voltage. For details, see *Section 3.4: Preregulator*.
4	2	C_T	Reset pulse delay adjustment. Connecting this pin via a capacitor to GND
5	4, 5, 6, 7, 14, 15, 16, 17	GND	Ground reference
6	10	RES	Reset output. It is pulled down when the output voltage goes below V_{RT}.
7	11	S_O	Sense output. This open collector pin must be connected to V_{OUT} via an external resistor. It is pulled down whenever the S_I voltage becomes lower than an internal voltage.
8	12	V_{OUT}	Output voltage. Block to GND via an external capacitor (see *Figure 3*)
-	3, 8, 9, 13, 18	NC	Not connected pins

2 Electrical specifications

2.1 Absolute maximum ratings

Table 3. Absolute maximum ratings

Symbol	Parameter	Value	Unit
V_{SDC}	DC operating supply voltage	28	V
V_{STR}	Transient supply voltage (T < 1s)	40	V
I_O	Output current	Internally limited	
V_O	Output voltage	20	V
V_{RES}, V_{SO}	Output voltage	20	V
I_{RES}, I_{SO}	Output current	5	mA
V_{CT}	Reset delay voltage	7	V
V_{SIDC}	Sense input voltage	28	V
V_Z	Preregulator output voltage	7	V
I_Z	Preregulator output current	5	mA
T_J	Junction temperature	-40 to +150	°C
T_{stg}	Storage temperature range	-55 to +150	°C

Note: The circuit is ESD protected according to MIL-STD-883C.

2.2 Thermal data

Table 4. Thermal data

Symbol	Description	SO-8	SO20L	Unit
$R_{th\ j\text{-}amb}$	Thermal Resistance Junction-ambient (max)	200	50	°C/W
$R_{th\ j\text{-}pins}$	Thermal Resistance Junction-pins (max)		15	°C/W
TJSD	Thermal Shutdown Junction temperature	165		°C

2.3 Electrical characteristics

V_S = 14 V; -40 °C < T_j < 125 °C unless otherwise specified

Table 5. Electrical characteristics

Symbol	Parameter	Test condition	Min.	Typ.	Max.	Unit
V_O	Output voltage	T_J = 25 °C; I_O = 1 mA	4.95	5	5.05	V
V_O	Output voltage	6 V < V_{IN} < 28 V, 1 mA < I_O < 50 mA	4.90	5	5.10	V
V_O	Output voltage	V_{IN} = 40 V; T < 1 s; 5 mA < I_O < 100 mA	4.75		5.25	V
V_{DP}	Dropout voltage	I_O = 10 mA I_O = 50 mA I_O = 100 mA		0.1 0.2 0.3	0.25 0.4 0.5	V V V
V_{IO}	Input to output voltage difference in undervoltage condition	V_{IN} = 4 V, I_O = 35 mA			0.4	V
I_{outh}(1)	Max output leakage	V_{IN} = 25 V, V_O = 5.5 V	20	50	80	µA
V_{OL}	Line regulation	6 V < V_{IN} < 28 V; I_O = 1 mA			20	mV
V_{OLO}	Load regulation	1 mA < I_O < 100 mA			30	mV
I_{LIM}	Current limit	V_O = 4.5 V V_O = 4.5 V; T_J = 25 °C V_O = 0 V(2)	105 120	200 100	400 400	mA mA mA
I_{QSE}	Quiescent current	I_O = 0.3 mA; T_J < 100 °C		200	300	µA
I_Q	Quiescent current	I_O = 100 mA			5	mA

1. With this test we guarantee that with no output current the output voltage will not exceed 5.5V
2. Foldback characteristic

Table 6. Reset

Symbol	Parameter	Test condition	Min.	Typ.	Max.	Unit
V_{RT}	Reset threshold voltage			VO - 0.5V		V
V_{RTH}	Reset threshold hysteresis		50	100	200	mV
t_{RD}	Reset pulse delay	C_T = 100 nF; T_R ≥ 100 µs	55	100	180	ms
V_{RL}	Reset output low voltage	R_{RES} = 10 KΩ to V_O V_S ≥ 1.5V			0.4	V
I_{RH}	Reset output high leakage current	V_{RES} = 5 V			1	µA
V_{CTth}	Delay comparator threshold			2		V
$V_{CTth, hy}$	Delay comparator threshold hysteresis			100		mV

Table 7. Sense

Symbol	Parameter	Test condition	Min.	Typ.	Max.	Unit
V_{st}	Sense low threshold		1.16	1.23	1.35	V
V_{sth}	Sense threshold hysteresis		20	100	200	mV
V_{SL}	Sense output low voltage	$V_{SI} \leq 1.16$ V; $V_S \geq 3$ V R_{SO} = 10 KΩ to V_O			0.4	V
I_{SH}	Sense output leakage	V_{SO} = 5 V; $V_{SI} \geq 1.5$ V			1	µA
I_{SI}	Sense input current	V_{SI} = 0	-20	-8	-3	µA

Table 8. Preregulator

Symbol	Parameter	Test condition	Min.	Typ.	Max.	Unit
V_Z	Preregulator output voltage	I_Z = 10 µA	4.5	5	6	V
I_Z	Preregulator output current				10	µA

3 Application information

Figure 3. Application circuit

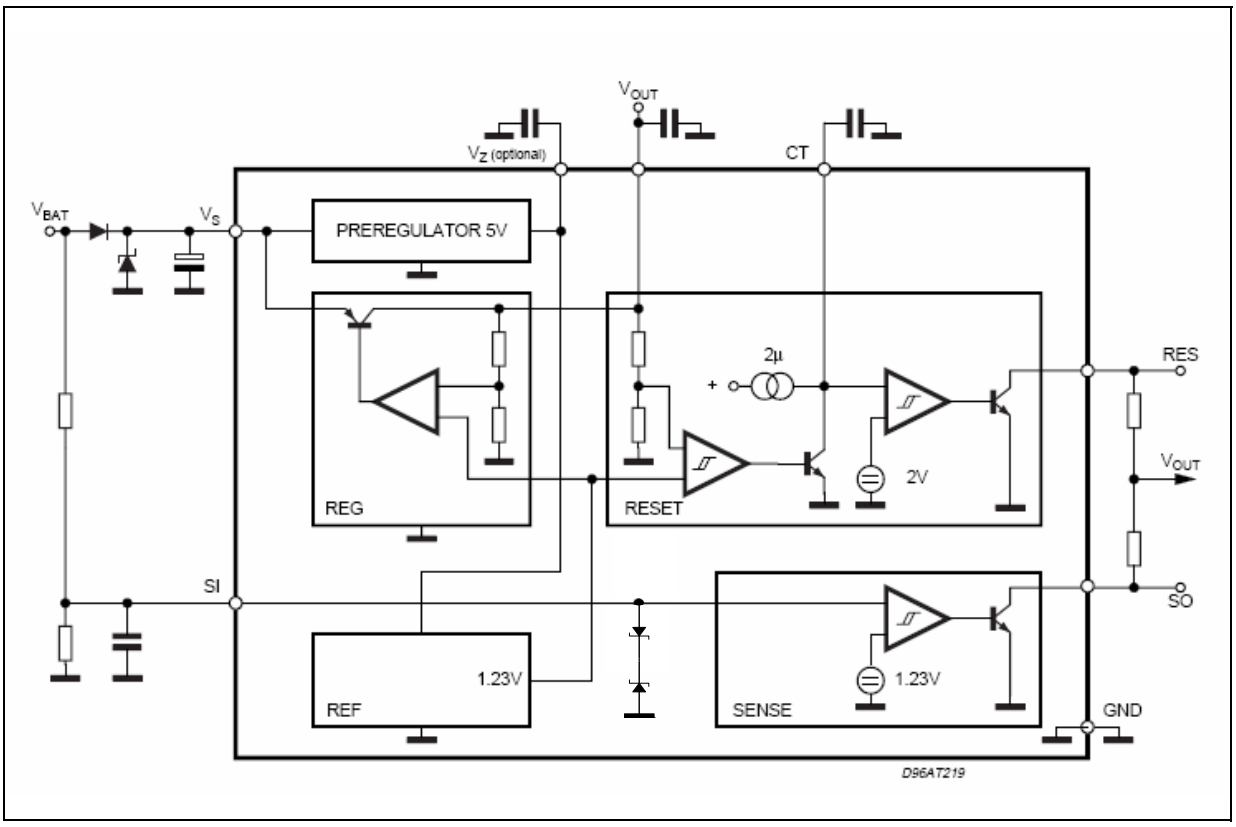

Note: For stability: $C_S \geq 1\mu F$, $C_O \geq 4.7\mu F$, ESR < 10Ω at 10KHz. Recommended for application: $C_S = C_O$ = 10 µF to 100 µF

3.1 Supply voltage transient

High supply voltage transients can cause a reset output signal disturbance. For supply voltages greater than 8V the circuit shows a high immunity of the reset output against supply transients of more than 100V/µs. For supply voltages less than 8V supply transients of more than 0.4V/µs can cause a reset signal disturbance.

To improve the transient behaviour for supply voltages less than 8V a capacitor at pin V_Z can be used.

This capacitor (C3 ≤ 1 µF) reduces also the output noise.

3.2 Functional description

The L4949ED-E and L4949EP-E are monolithic integrated voltage regulator, based on the STM modular voltage regulator approach. Several outstanding features and auxiliary functions are implemented to meet the requirements of supplying microprocessor systems in automotive applications. Nevertheless, it is suitable also in other applications where the

present functions are required. The modular approach of this device allows to get easily also other features and functions when required.

3.3 Voltage regulator

The voltage regulator uses an Isolated Collector Vertical PNP transistor as a regulating element.

Figure 4. Foldback characteristic of V_O

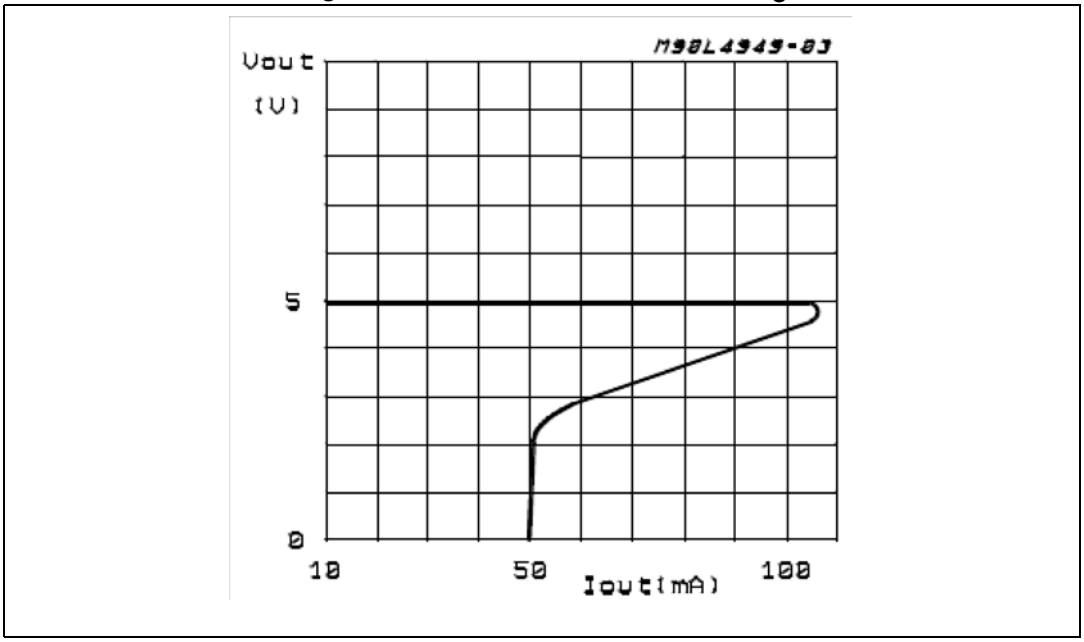

With this structure very low dropout voltage at currents up to 100mA is obtained. The dropout operation of the standby regulator is maintained down to 3V input supply voltage. The output voltage is regulated up to the transient input supply voltage of 40V. With this feature no functional interruption due to overvoltage pulses is generated. The typical curve showing the standby output voltage as a function of the input supply voltage is shown in *Figure 5*. The current consumption of the device (quiescent current) is less than 300 µA.

To reduce the quiescent current peak in the undervoltage region and to improve the transient response in this region, the dropout voltage is controlled, the quiescent current as a function of the supply input voltage is shown in *Figure 6*.

Figure 5. Output voltage vs input voltage

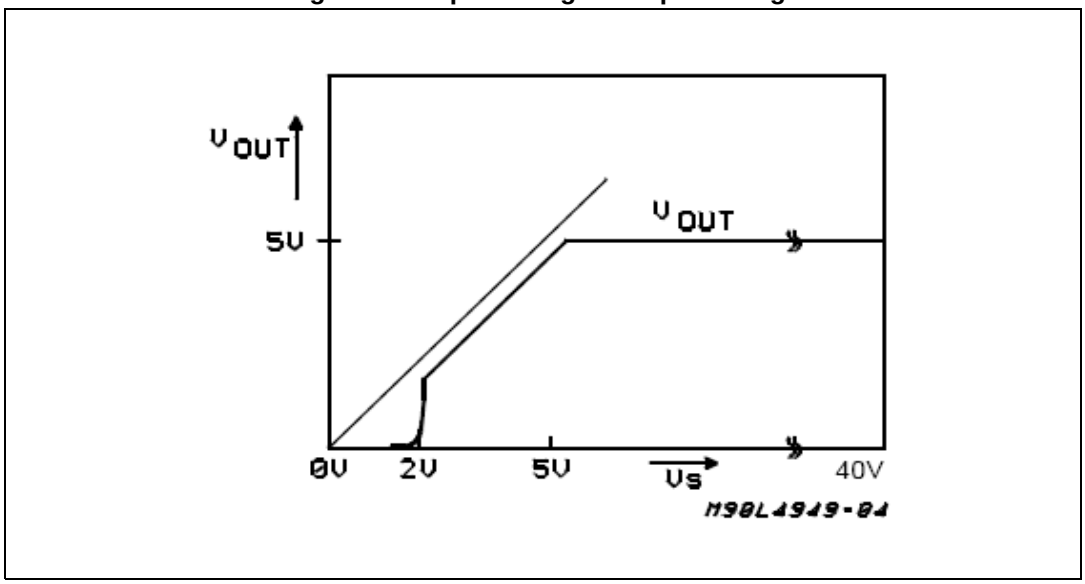

Figure 6. Quiescent current vs supply voltage

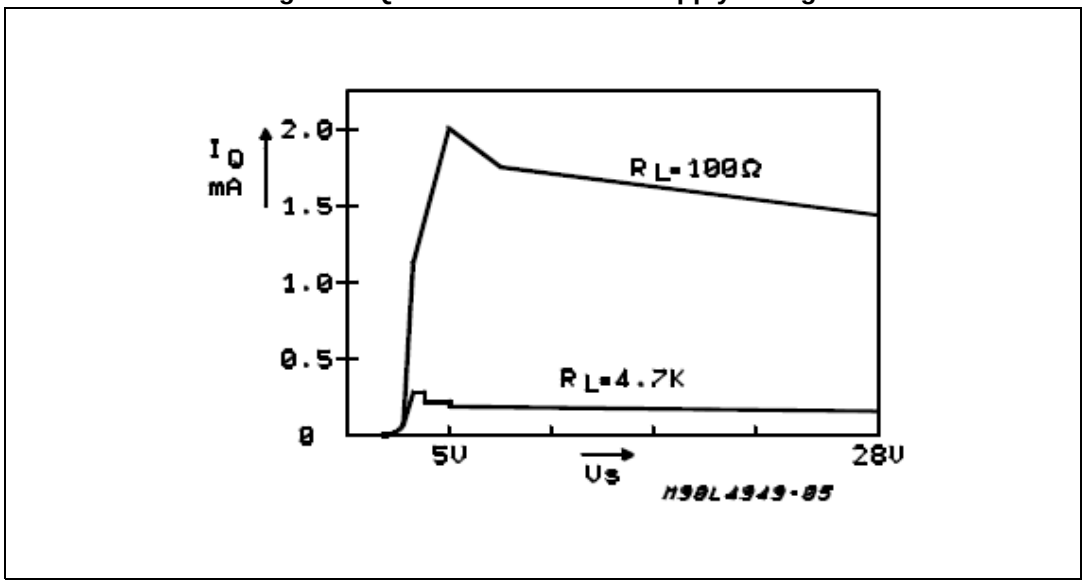

3.4 Preregulator

To improve the transient immunity a preregulator stabilizes the internal supply voltage to 5 V. This internal voltage is present at Pin 3 (V_Z). This voltage should not be used as an output because the output capability is very small (≤ 10 µA).

This output may be used as an option when a better transient behaviour for supply voltages less than 8 V is required (see also application note).

In this case a capacitor (100 nF - 1 µF) must be connected between pin V_Z and GND. If this feature is not used pin V_Z must be left open.

3.5 Reset circuit

The block circuit diagram of the reset circuit is shown in *Figure 7*. The reset circuit supervises the output voltage.

The reset threshold of 4.5 V is defined with the internal reference voltage and standby output divider.

The reset pulse delay time t_{RD}, is defined with the charge time of an external capacitor C_T:

$$t_{RD} = \frac{C_T \cdot 2V}{2\mu A}$$

The reaction time of the reset circuit originates from the discharge time limitation of the reset capacitor CT and is proportional to the value of CT.

The reaction time of the reset circuit increases the noise immunity. Standby output voltage drops below the reset threshold only a bit longer than the reaction time results in a shorter reset delay time.

The nominal reset delay time is generated for standby output voltage drops longer than approximately 50ms.

The typical reset output waveforms are shown in *Figure 8*.

3.6 Sense comparator

The sense comparator compares an input signal with an internal voltage reference of typical 1.23V. The use of an external voltage divider makes this comparator very flexible in the application.

It can be used to supervise the input voltage either before or after the protection diode and to give additional informations to the microprocessor like low voltage warnings.

Figure 7. Block circuit of reset circuit

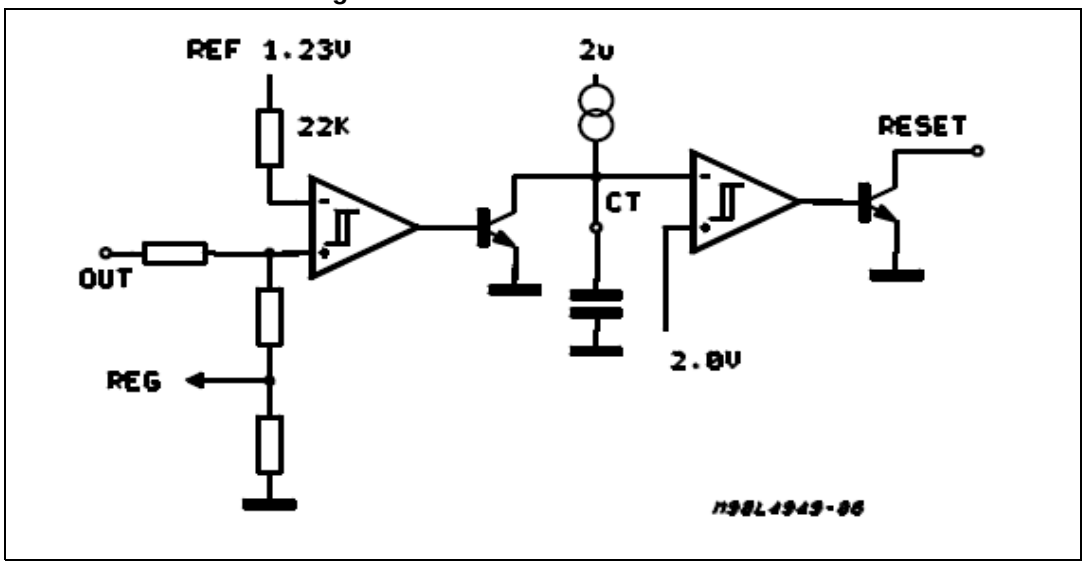

Figure 8. Waveforms

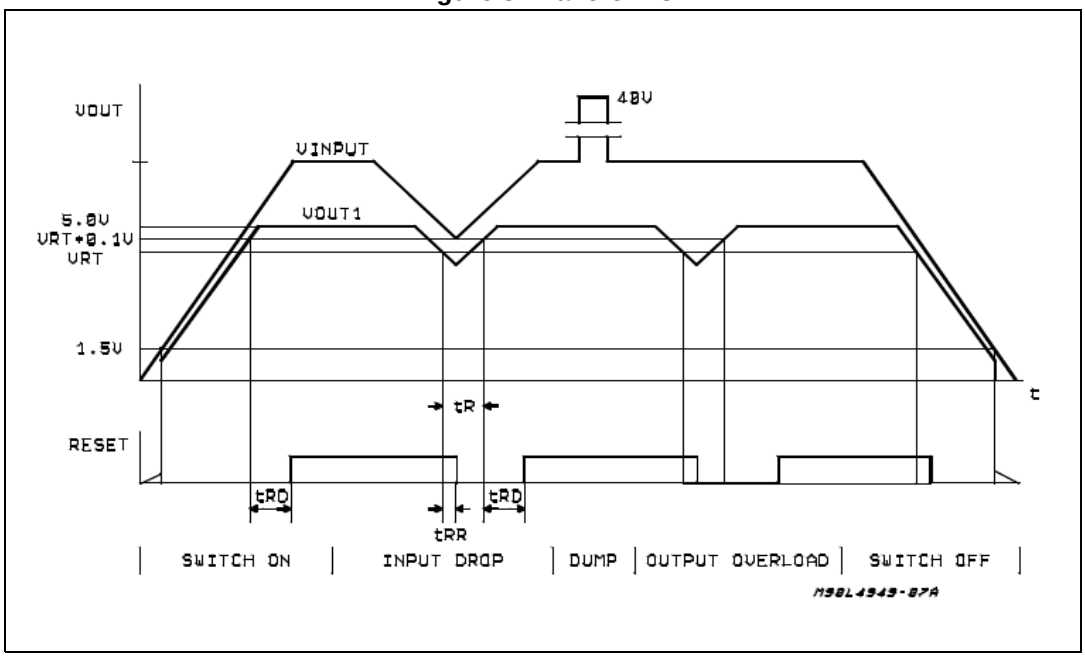

4 Package and packing information

4.1 ECOPACK® packages

In order to meet environmental requirements, ST offers these devices in different grades of ECOPACK® packages, depending on their level of environmental compliance. ECOPACK® specifications, grade definitions and product status are available at: www.st.com.

ECOPACK® is an ST trademark.

4.2 SO-8 TP package information

Table 9. SO-8 TP mechanical data

Dim.	mm		
	Min.	Typ.	Max.
A			1.75
a1	0.1		0.25
a2			1.65
a3	0.65		0.85
b	0.35		0.48
b1	0.19		0.25
C	0.25		0.5
c1	45° (typ.)		
D(1)	4.8		5.0
E	5.8		6.2
e		1.27	
e3		3.81	
F(1)	3.8		4.0
L	0.4		1.27
M			0.6
S	8° (max.)		

1. D and F do not include mold flash or protrusions. Mold flash or protrusions shall not exceed 0.15mm (.006inch).

Figure 9. SO-8 TP package dimensions

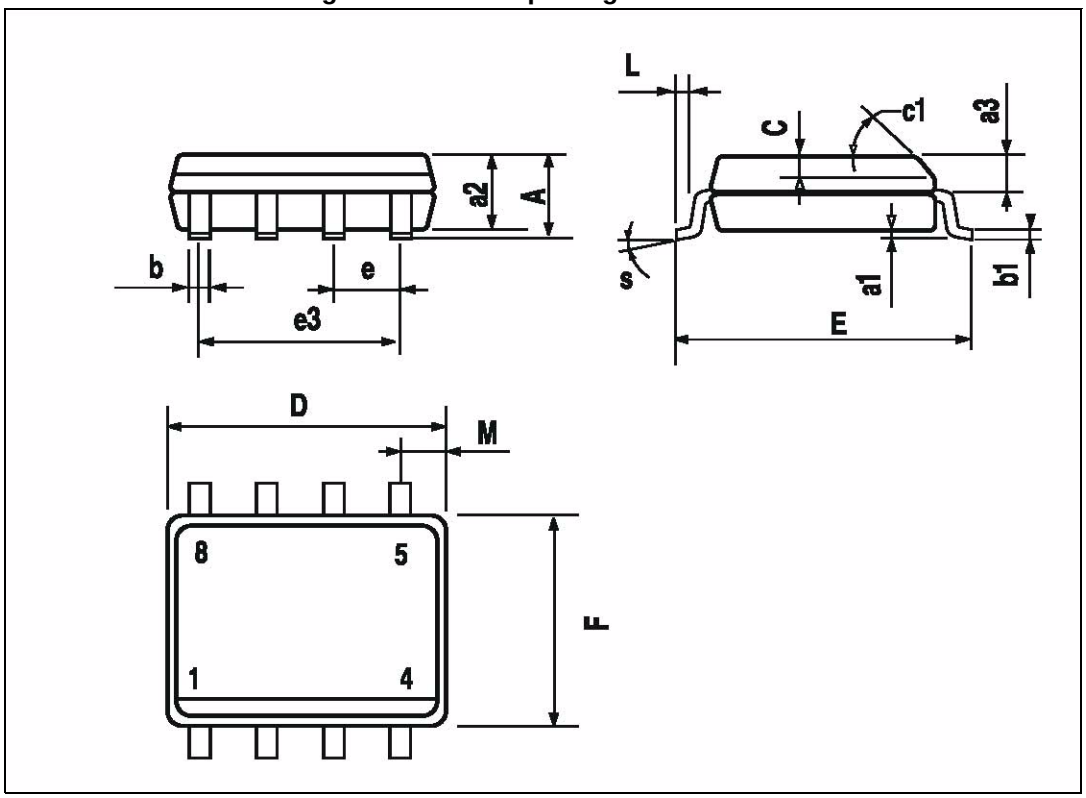

4.3 SO-20 TP package information

Table 10. SO-20 TP mechanical data

Dim.	mm		
	Min.	Typ.	Max.
A	2.35		2.65
A1	0.1		0.3
B	0.33		0.51
C	0.23		0.32
D	12.6		13
E	7.4		7.6
e		1.27	
H	10		10.65

Table 10. SO-20 TP mechanical data (continued)

Dim.	mm		
	Min.	Typ.	Max.
h	0.25		0.75
L	0.4		1.27
K	0 (min.)8 (max.)		

Figure 10. SO20 TP package dimensions

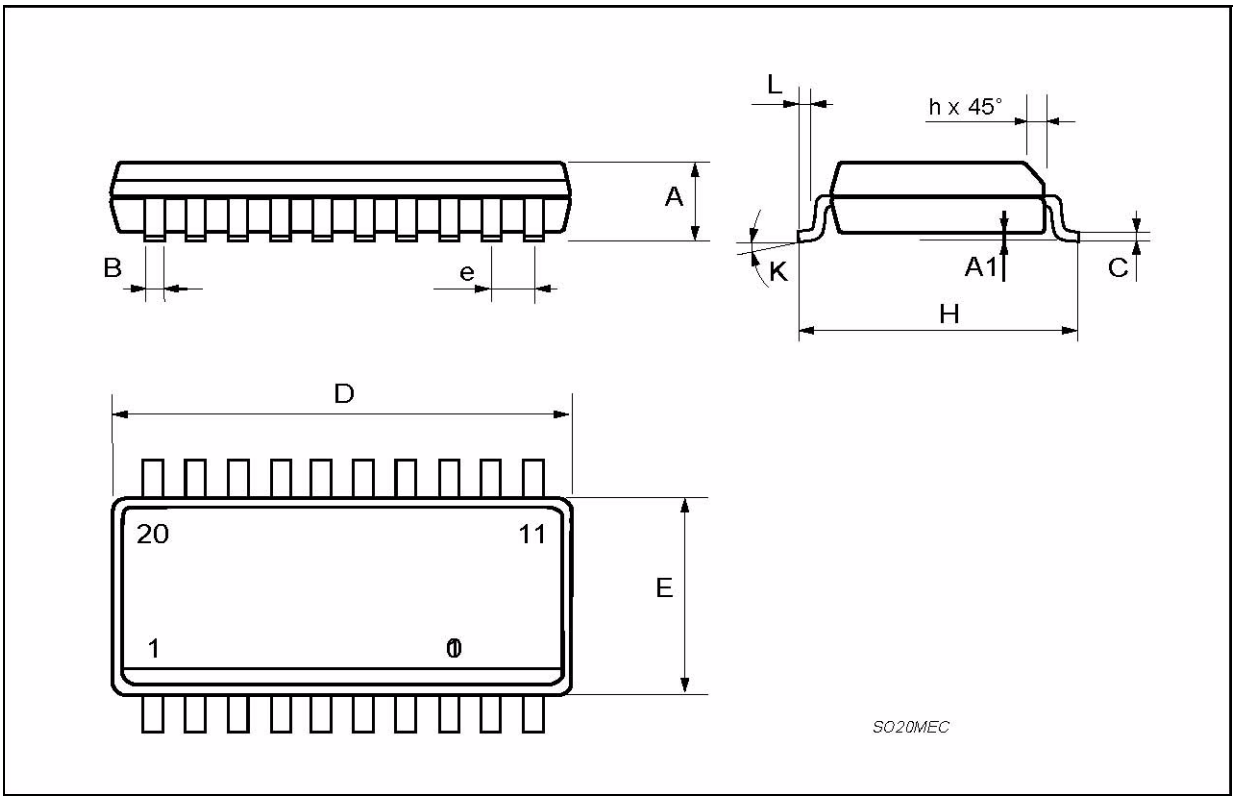

5 Revision history

Table 11. Document revision history

Date	Revision	Description of changes
24-Nov-2009	1	Initial release.
20-Sep-2013	2	Updated disclaimer.
28-Feb-2018	3	Removed tube version for SO-8 package.
24-Sep-2018	4	Updated *: Features*

IMPORTANT NOTICE – PLEASE READ CAREFULLY

STMicroelectronics NV and its subsidiaries (“ST”) reserve the right to make changes, corrections, enhancements, modifications, and improvements to ST products and/or to this document at any time without notice. Purchasers should obtain the latest relevant information on ST products before placing orders. ST products are sold pursuant to ST’s terms and conditions of sale in place at the time of order acknowledgement.

Purchasers are solely responsible for the choice, selection, and use of ST products and ST assumes no liability for application assistance or the design of Purchasers’ products.

No license, express or implied, to any intellectual property right is granted by ST herein.

Resale of ST products with provisions different from the information set forth herein shall void any warranty granted by ST for such product.

ST and the ST logo are trademarks of ST. All other product or service names are the property of their respective owners.

Information in this document supersedes and replaces information previously supplied in any prior versions of this document.

© 2018 STMicroelectronics – All rights reserved