Pb Free Plating Product

L4206S

20Amperes,600Volts Insulated Common Cathode Ultra Fast Recovery Rectifiers

APPLICATION

- Freewheeling, Snubber, Clamp
- Inversion Welder
- PFC
- Plating Power Supply
- Ultrasonic Cleaner and Welder
- Converter & Chopper
- UPS

PRODUCT FEATURE

- Ultrafast Recovery Time
- Soft Recovery Characteristics
- Low Recovery Loss
- Low Forward Voltage
- High Surge Current Capability
- Low Leakage Current

TO-3PF(TO-3PML)

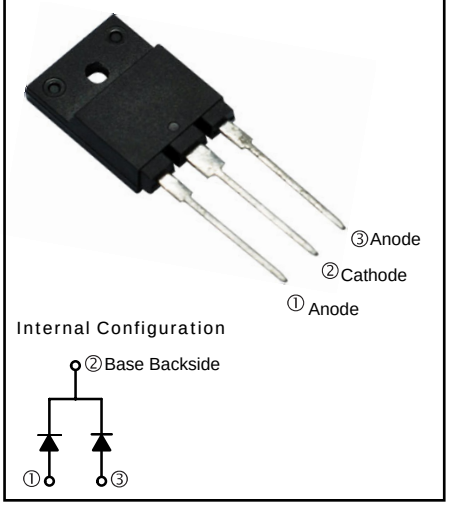

GENERAL DESCRIPTION

L4206S using the lastest FRED FAB process(planar passivation chip) with ultrafast and soft recovery characteristic.

Absolute Maximum Ratings

Parameter	Symbol	Test Conditions	Values	Units
Repetitive peak reverse voltage	V_{RRM}		600	V
Continuous forward current(total device)	$I_{F(AV)}$	Tc =110°C	20	A
Single pulse forward current(total device)	I_{FSM}	Tc =25°C	160	
Maximum repetitive forward current	I_{FRM}	Square wave, 20kHZ	60	
Operating junction	Tj		175	°C
Storage temperatures	Tstg		-55 to +175	°C

Electrical characteristics (Ta=25°C unless otherwise specified)

Parameter	Symbol	Test Conditions	Min	Typ.	Max.	Units
Breakdown voltage Blocking voltage	V_{BR}, V_R	I_R=100μA	600			V
Forward voltage (Per Diode)	V_F	I_F=10A		1.35	1.60	
		I_F=10A, Tj =125°C		1.10	1.40	
Reverse leakage current(Per Diode)	I_R	V_R= V_{RRM}			20	μA
		Tj=150°C, V_R=600V			200	
Reverse recovery time(Per Diode)	t_{rr}	I_F=0.5A, I_R=1A, I_{RR}=0.25A		35	45	ns
		I_F=1A,V_R=30V, di/*dt* =200A/us		27	35	

Thermal characteristics

Paramter	Symbol	Typ	Units
Junction-to-Case	$R_{\theta JC}$	1.2	℃/W

© 1995 Thinki Semiconductor Co., Ltd.

Download from alldatasheet.com

Electrical performance (typical)

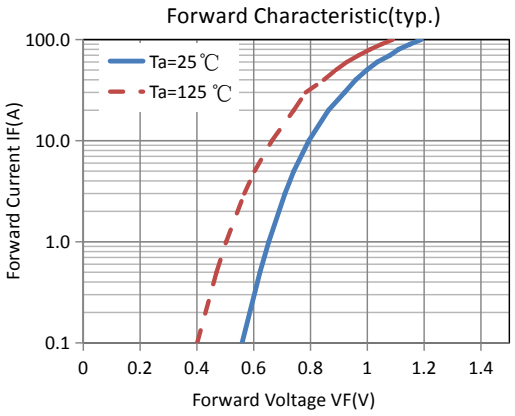

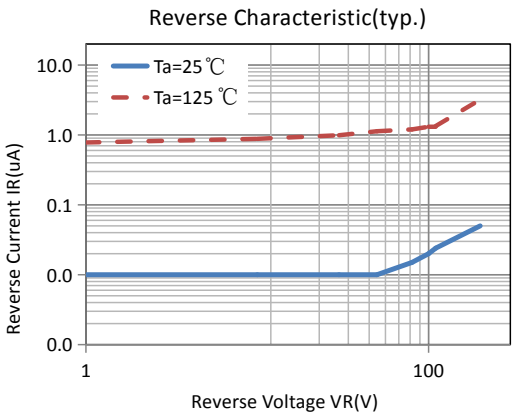

Package Information

TO-3PF PACKAGE

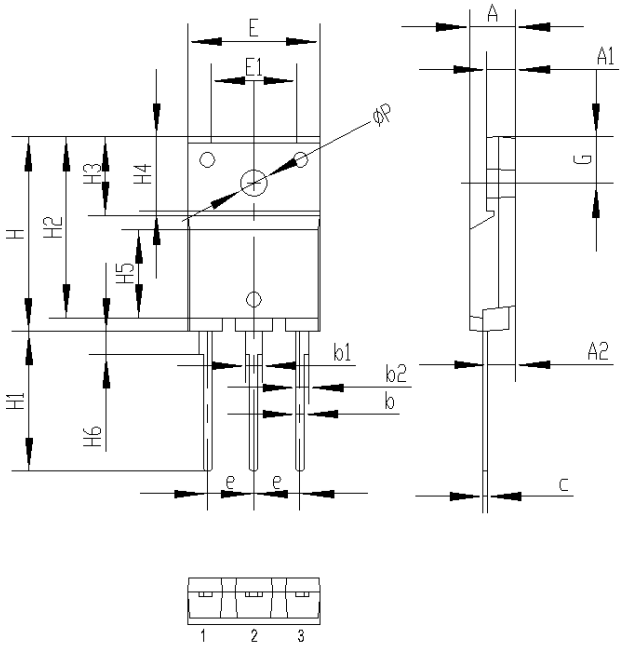

	mm		
	MIN	NOM	MAX
A	5.3	5.5	5.7
A1	3.25	3.45	3.65
A2	3.15	3.35	3.55
b	0.85	1.0	1.15
b1	1.85	2.0	2.15
b2	1.45	1.6	1.75
c	0.4	0.5	0.6
e	5.3	5.45	5.6
E	15.40	15.60	15.80
E1	10.00	10.20	10.40
H	22.80	23.00	23.20
H1	16.00	16.50	17.00
H2	21.20	21.40	21.60
H3	9.10	9.30	9.50
H4	8.55	8.75	8.95
H5	10.20	10.40	10.60
H6	2.55	2.70	2.85
G	5.3	5.5	5.7
ØP	3.05	3.2	3.35

© 1995 Thinki Semiconductor Co., Ltd.

http://www.thinkisemi.com.tw/

Download from alldatasheet.com