L1186

CMOS IC

600mA CMOS LDO

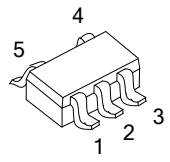

SOT-25

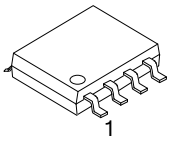

SOP-8

■ DESCRIPTION

The UTC **L1186** is a COMS positive linear regulator. One of its features is the very low quiescent current typical as low as 30μA and its dropout voltage is extremely low with 600mA output current.

The internal circuit includes thermal shutdown and current fold-back to prevent device failure when the circuit is operated in the bad conditions.

In application, the UTC **L1186** needs a low noise, regulated supply. For stable operation, the output capacitance value should be 2.2μF or more.

The UTC **L1186** is an ideal for battery applications, such as instrumentations, portable electronics, wireless devices, cordless phones, PC peripherals, and battery powered widgets.

■ FEATURES

* Accurate to Within 1.5%
* Quiescent Current: 30μA
* Internal Over-Temperature Shutdown
* With Current Limiting
* Internal Short Circuit Current Fold-Back
* With Noise Reduction Bypass Capacitor
* Has Power-Saving Shutdown Mode
* Very Low Temperature Coefficient

■ ORDERING INFORMATION

Ordering Number		Package	Packing
Lead Free	Halogen Free		
L1186L-xx-AF5-R	L1186G-xx-AF5-R	SOT-25	Tape Reel
L1186L-xx-S08-A-R	L1186G-xx-S08-A-R	SOP-8	Tape Reel
L1186L-xx-S08-B-R	L1186G-xx-S08-B-R	SOP-8	Tape Reel

Note: xx: Output Voltage, refer to Marking Information.

L1186L-xx-AF5-X-R (1)Packing Type (2)Pin Assignment (3)Package Type (4)Output Voltage Code (5)Lead Free	(1) R: Tape Reel (2) refer to Pin Configuration (FOR SOP-8) (3) AF5: SOT-25, S08: SOP-8 (4) xx: Refer to Marking Information (5) G: Halogen Free L:Lead Free

Copyright © 2011 Unisonic Technologies Co., Ltd

■ MARKING INFORMATION

PACKAGE	VOLTAGE CODE	MARKING
SOT-25	15 :1.5V 28 :2.8V AD:ADJ	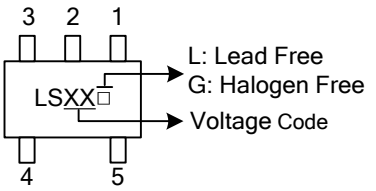
SOP-8		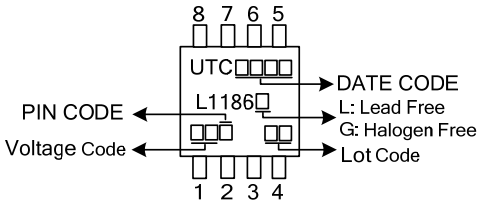

■ PIN CONFIGURATION

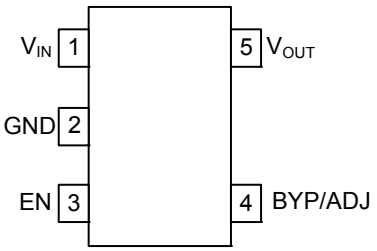

SOT-25

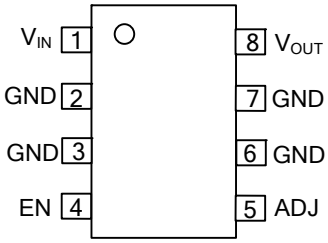

SOP-8(A)

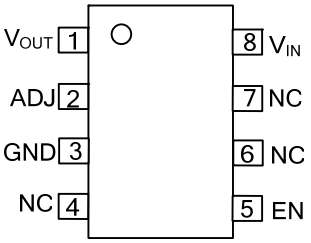

SOP-8(B)

■ PIN DESCRIPTION

PIN NO			PIN NAME	DESCRIPTION
SOT-25	SOP-8(A)	SOP-8(B)		
1	1	8	V_{IN}	Input for voltage input.
2	2,3,6,7	3	GND	Ground.
3	4	5	EN	Enable pin.
4	5	2	BYP/ADJ	Noise Reduction Bypass Capacitor/ Adjusted Voltage
5	8	1	V_{OUT}	Output voltage pin
		4,6,7	NC	No connection

■ BLOCK DIAGRAM

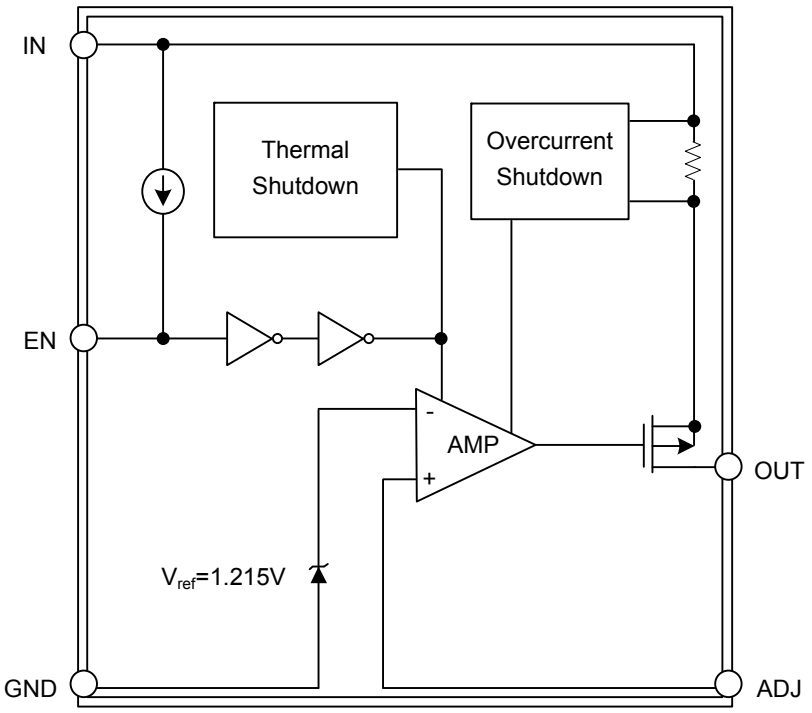

■ ABSOLUTE MAXIMUM RATING(T_a = 25°C, unless otherwise specified.)

PARAMETER		SYMBOL	RATINGS	UNIT
Input Voltage		V_{IN}	8	V
Output Voltage		V_{OUT}	GND-0.3 ~ V_{IN}+0.3	V
Output Current		I_{OUT}	$\frac{P_D}{V_{IN}-V_{OUT}}$	A
Power Dissipation	SOT-25	P_D	400	mW
	SOP-8		600	
Junction Temperature		T_J	150	°C
Operating Temperature		T_{OPR}	-40~+85	°C
Storage Temperature		T_{STG}	-65~+150	°C

Note: Absolute maximum ratings are those values beyond which the device could be permanently damaged. Absolute maximum ratings are stress ratings only and functional device operation is not implied.

■ THERMAL DATA

PARAMETER		SYMBOL	RATINGS	UNIT
Junction to Ambient	SOT-25	θ_{JA}	260	°C/W
	SOP-8		200	
Junction to Case (Note)	SOT-25	θ_{JC}	81	°C/W
	SOP-8		65	

Note: θ_{JC} on center of molding compound if IC has on tab

■ ELECTRICAL CHARACTERISTICS(T_a = 25°C, unless otherwise specified.)

Fixed Voltage

PARAMETER	SYMBOL	TEST CONDITIONS		MIN	TYP	MAX	UNIT
Input Voltage	V_{IN}			Note1		7	V
Output Voltage Accuracy	V_{OUT}	I_{OUT}=1mA		-1.5		1.5	%
Line Regulation	$\frac{\Delta V_{OUT}}{V_{OUT}}$	I_{OUT}=1mA	1.4V<V_{OUT}≤2.0V	-0.15		0.15	%
		V_{IN}=V_{OUT}+1~V_{OUT}+2	2.0V<V_{OUT}<4.0V	-0.1	0.02	0.1	%
Load Regulation	$\frac{\Delta V_{OUT}}{V_{OUT}}$	I_{OUT}=1mA~600 mA			0.2	1	%
Output Current	I_{OUT}	V_{OUT}>1.2V		600			mA
Current Limit	I_{LIMIT}	V_{OUT}>1.2V		600	800		mA
Short Circuit Current	I_{SC}	V_{OUT}<0.8V			300	600	mA
Quiescent Current	I_Q	I_{OUT}=0mA			30	50	μA
Ground Pin Current	I_{GND}	I_{OUT}=1mA~600mA			35		μA
Dropout Voltage	V_D	I_{OUT} =600mA	1.4V<$V_{O(NOM)}$≤2.0V			1400	mV
		V_{OUT}=$V_{O(NOM)}$-2.0%	2.0V<$V_{O(NOM)}$≤2.8V			800	mV
Over Temperature Shutdown	OTS				150		°C
Over Temperature Hysteresis	OTH				30		°C
Temperature Coefficient of Output Voltage	T_CV_O				30		ppm/°C
Power Supply Rejection	PSRR	I_{OUT} =100mA	f=1kHz		75		dB
		C_{OUT}=2.2μF ceramic	f=10kHz		55		dB
		C_{BYP}=0.01μF	f=100kHz		30		dB
Output Voltage Noise	eN	f=10Hz~100kHz, I_{OUT} =10mA C_{OUT}=2.2μF , C_{BYP}=0.1μF			30		μVrms
EN Input Threshold	V_{EH}	V_{IN}=2.7V~7V		2.0		V_{IN}	V
	V_{EL}	V_{IN}=2.7V~7V		0		0.4	V
EN Input Bias Current	I_{EH}	V_{EN}=V_{IN}, V_{IN}=2.7V~7V				0.1	μA
	I_{EL}	V_{EN}=0V, V_{IN}=2.7V~7V				0.5	μA
Shutdown Supply Current	I_{SD}	V_{IN}=5V, V_{OUT} =0V, V_{EN}<V_{EL}			0.5	1	μA
PG Leakage Current	I_{LC}	V_{PG}=7V				1	μA

■ ELECTRICAL CHARACTERISTICS (Cont.)

Adjusted Voltage

PARAMETER	SYMBOL	TEST CONDITIONS		MIN	TYP	MAX	UNIT
Input Voltage	V_{IN}			Note1		7	V
Reference Voltage	V_{REF}			1.196	1.215	1.234	V
Output Voltage Accuracy	V_{OUT}	I_{OUT}=1mA		-1.5		1.5	%
Line Regulation	$\frac{\Delta V_{OUT}}{V_{OUT}}$	$V_{IN}=V_{OUT}+V_D$~7V, I_{OUT}=1mA		-0.15		0.15	%
Load Regulation	$\frac{\Delta V_{OUT}}{V_{OUT}}$	I_{OUT}=1mA	1.4V<V_{OUT}≤2.0V	-0.15		0.15	%
		$V_{IN}=V_{OUT}+1$~$V_{OUT}+2$	2.0V<V_{OUT}<4.0V	-0.1	0.02	0.1	
Output Current	I_{OUT}	V_{OUT}>1.3V		600			mA
Current Limit	I_{LIMIT}	V_{OUT}>1.3V		600	800		mA
Short Circuit Current	I_{SC}	V_{OUT}<0.8V			300	600	mA
Adjusted Current	I_{ADJ}	I_{OUT}=0mA			30	50	μA
Ground Pin Current	I_{GND}	I_{OUT}=1mA~600mA			35		μA
Dropout Voltage	V_D	$V_{OUT}=V_{O(NOM)}$-2.0%, I_{OUT} =600mA				600	mV
Over Temperature Shutdown	OTS				150		°C
Over Temperature Hysteresis	OTH				30		°C
Temperature Coefficient of Output Voltage	T_CV_O				30		ppm/°C
Power Supply Rejection	PSRR	I_{OUT} =100mA	f=1kHz		40		dB
		C_{OUT}=2.2μF ceramic	f=10kHz		20		dB
		C_{BYP}=0.01μF	f=100kHz		15		dB
Output Voltage Noise	eN	f=10Hz~100kHz, I_{OUT} =10mA C_{OUT}=2.2μF , C_{BYP}=0.1μF			30		μVrms
EN Input Threshold	V_{EH}	V_{IN}=2.7V~7V		2.0		V_{IN}	V
	V_{EL}	V_{IN}=2.7V~7V		0		0.4	V
EN Input Bias Current	I_{EH}	$V_{EN}=V_{IN}$, V_{IN}=2.7V~7V				0.1	μA
	I_{EL}	V_{EN}=0V, V_{IN}=2.7V~7V				0.5	μA
Shutdown Supply Current	I_{SD}	V_{IN}=5V, V_{OUT} =0V, $V_{EN}<V_{EL}$			0.5	1	μA
PG Leakage Current	I_{LC}	V_{PG}=7V				1	μA

Notes: 1. $V_{IN(MIN)}=V_{OUT}+V_D$

2. To prevent the Short Circuit Current protection feature from being prematurely activated, the input voltage must be applied before a current source load is applied.

■ TYPICAL APPLICATION CIRCUIT

Fixed Voltage

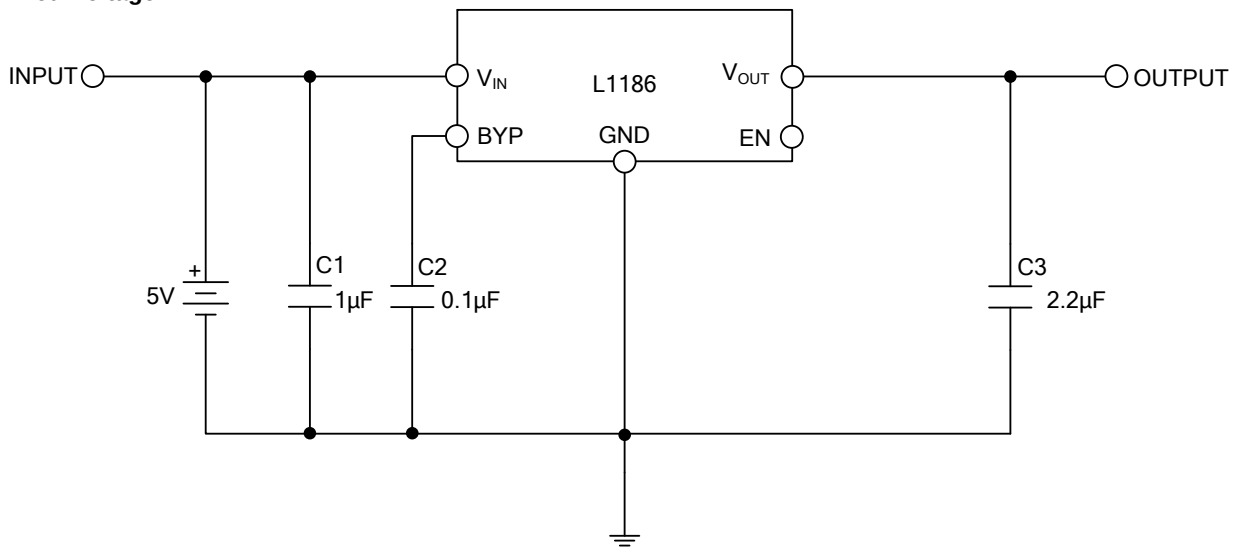

Adjusted Voltage

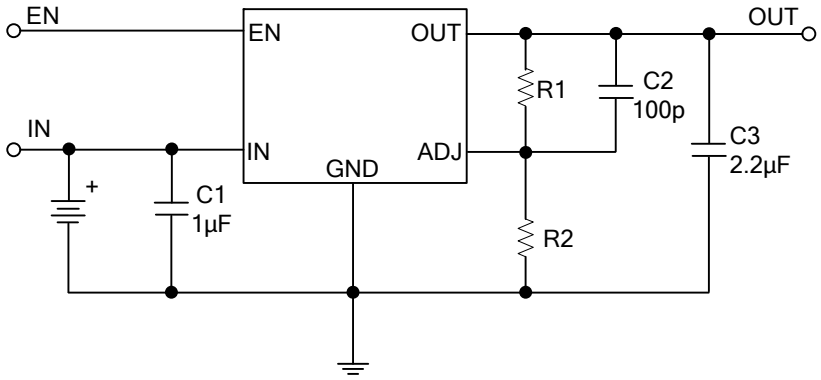

V_{OUT} = 1.215 (R1/R2 +1)
C2 is unnecessary if R1 or R2 < 20 KΩ
R_1 and R_2 use resistance value within 1% accuracy for correct for correct V_{OUT}

■ TYPICAL CHARACTERISTICS

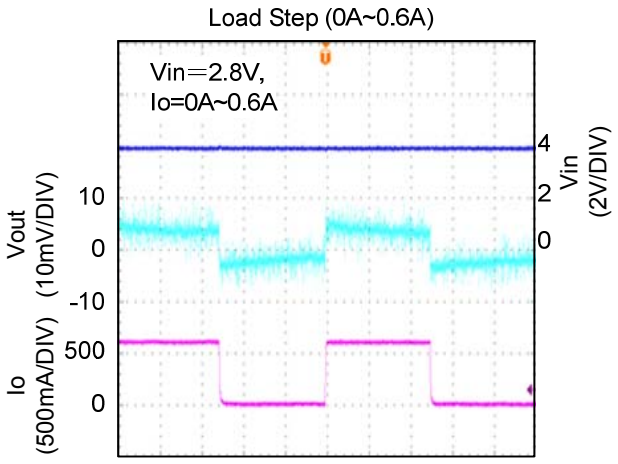

UTC assumes no responsibility for equipment failures that result from using products at values that exceed, even momentarily, rated values (such as maximum ratings, operating condition ranges, or other parameters) listed in products specifications of any and all UTC products described or contained herein. UTC products are not designed for use in life support appliances, devices or systems where malfunction of these products can be reasonably expected to result in personal injury. Reproduction in whole or in part is prohibited without the prior written consent of the copyright owner. The information presented in this document does not form part of any quotation or contract, is believed to be accurate and reliable and may be changed without notice.