Small Toroid RF Chokes

Miniature Two Lead Thru-hole Packages
Excellent Electrical Performance - High Q

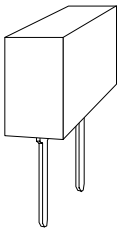

Applications Include
- Satellite Communications
- Microwave Equipment
- Broadcast TV
- Cable TV Systems
- Test Equipment
- AM / FM Radio
- Receivers / Transmitters
- Scanners

Electrical Specifications at 25° C

PARAMETER	MIN.	TYP.	MAX.	UNITS
Inductance[1]	312	390	468	µH
Q[2]		80		
DCR Pins 1-2		3.2		Ω
Self Resonance Frequency		3.8		MHz

1.Tested @ 100 kHz - 100 mV
2. @ 1MHz

Flammability: Materials used in the production of these units meet requirements of UL94-VO and IEC 695-2-2 needle flame test.

Dimensions in inches (mm)

Code	L	W	H
MT3	0.385 (9.78)	0.195 (4.95)	0.395 (10.03)

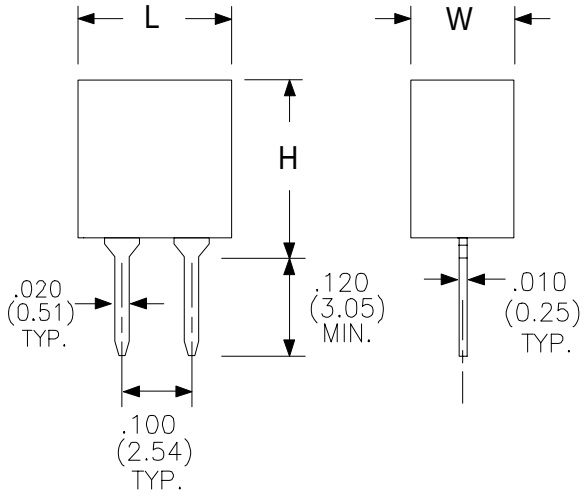

Schematic Diagram

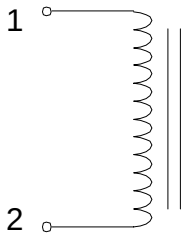

RHOMBUS P/N: **L-11782F**	
CUST P/N:	NAME:
DATE: 02/02/00	SHEET: 1 OF 1

Rhombus Industries Inc.
Transformers & Magnetic Products

www.rhombus-ind.com

15801 Chemical Lane,
Huntington Beach, CA 92649-1595
Phone: (714) 898-0960 • FAX: (714) 896-0971