CURRENT SENSE INDUCTOR

DESIGNED FOR
SWITCHING POWER SUPPLY APPLICATIONS

FREQUENCY RANGE 20kHz OR GREATER

HOLE THRU CENTER FOR PRIMARY WINDING.

PARAMETER	MIN.	MAX.	UNITS
Secondary Inductance	20		mHy
Secondary DCR		1.4	Ω
Primary unipolar rating		300	AμS
Secondary Turns	99	101	
Hi-Pot	2500		V
1 turn primary peak sense current is 20 amps max. with 40% duty cycle.			

Test Conditions:
Inductance tested at $1V_{RMS}$ and 15.75 kHz

SCHEMATIC

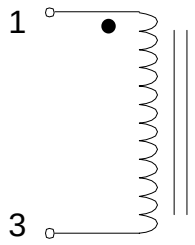

Dimensions
in inches (mm)

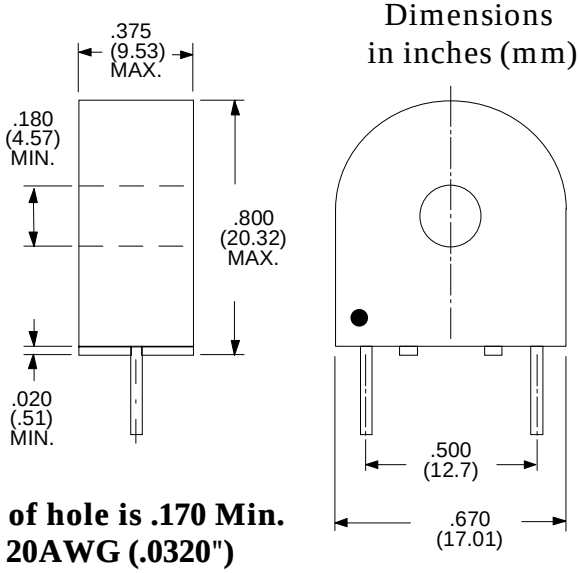

1) Diameter of hole is .170 Min.
2) Leads are 20AWG (.0320")
3) Lead length is .170 Min.
Dot indicates pin #1

RHOMBUS P/N: **L-11002**	
CUST P/N:	NAME:
DATE: **12/22/93**	SHEET: 1 OF 1

Rhombus
Industries Inc.
Transformers & Magnetic Products

15801 Chemical Lane, Huntington Beach, CA 92649
Phone: (714) 898-0960
FAX: (714) 896-0971