Kionix®	**± 2.75g Tri-axis Analog Accelerometer Specifications**	**PART NUMBER:** **KXTH5-4325** **Rev. 2** **Feb-2011**

Product Description



The KXTH5-4325 is a Tri-axis, silicon micromachined accelerometer with a full-scale output range of +/-2.75g (27 m/s/s). The sense element is fabricated using Kionix's proprietary plasma micromachining process technology. Acceleration sensing is based on the principle of a differential capacitance arising from acceleration-induced motion of the sense element, which further utilizes common mode cancellation to decrease errors from process variation, temperature, and environmental stress. The sense element is hermetically sealed at the wafer level by bonding a second silicon lid wafer to the device using a glass frit. A separate ASIC device packaged with the sense element provides signal conditioning and self-test. The accelerometer is delivered in a 3 x 5 x 0.9mm Land Grid Array (LGA) plastic package operating from a 1.8 – 3.6 V DC supply. The KXTH5 features a factory programmable low pass filter.

There are 2 factory programmable modes of operation for the KXTH5:

Mode 00 – The PD pin must be **high** for normal operation and **low** for power shutdown.

Mode 01 – The PD pin must be **low** for normal operation and **high** for power shutdown.

The KXTH5-4325 is factory programmed to be in MODE 01.

36 Thornwood Dr. – Ithaca, NY 14850
tel: 607-257-1080 – fax:607-257-1146
www.kionix.com - info@kionix.com

© 2010 Kionix – All Rights Reserved

Kionix®	**± 2.75g Tri-axis Analog Accelerometer Specifications**	**PART NUMBER:** **KXTH5-4325** **Rev. 2** **Feb-2011**

Functional Diagram

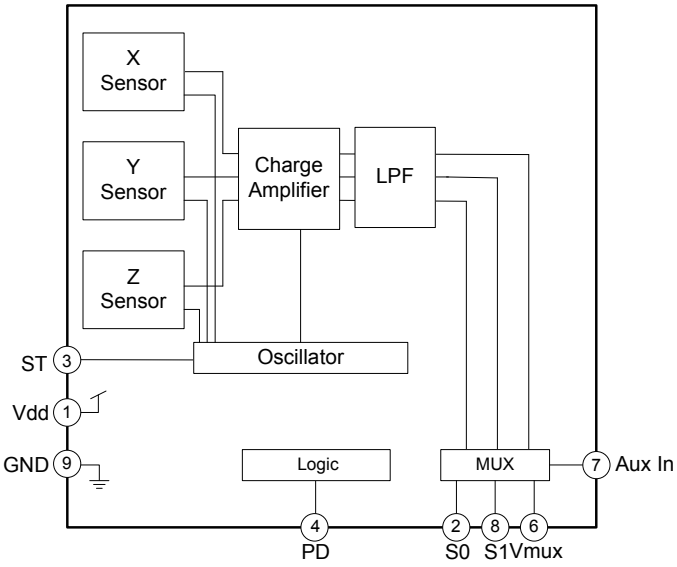

36 Thornwood Dr. – Ithaca, NY 14850
tel: 607-257-1080 – fax:607-257-1146
www.kionix.com - info@kionix.com

© 2010 Kionix – All Rights Reserved

Kionix®	**± 2.75g Tri-axis Analog Accelerometer Specifications**	**PART NUMBER:** **KXTH5-4325** **Rev. 2** **Feb-2011**

Product Specifications

Table 1. Mechanical

(specifications are for operation at 2.5V and T = 25C unless stated otherwise)

Parameters	Units	Min	Typical	Max
Operating Temperature Range	ºC	-40	-	85
Zero-g Offset	V	1.177	1.25	1.323
Zero-g Offset Variation from RT over Temp.	mg/ºC		0.6	
Sensitivity	mV/g	346	364	382
Sensitivity Variation from RT over Temp.	%/ºC		0.01 (xy) 0.04 (z)	
Offset Ratiometric Error (V_{dd} = 2.5V ± 5%)	%		0.1	
Sensitivity Ratiometric Error (V_{dd} = 2.5V ± 5%)	%		0.3	
Self Test Output change on Activation	g		1.5 (x) 1.4 (y) 1 (z)	
Non-Linearity	% of FS		0.1	
Cross Axis Sensitivity	%		2	
Noise Density (on filter pins)	µg / √Hz		150	

36 Thornwood Dr. – Ithaca, NY 14850
tel: 607-257-1080 – fax:607-257-1146
www.kionix.com - info@kionix.com

© 2010 Kionix – All Rights Reserved

Table 2. Electrical

(specifications are for operation at 2.5V and T = 25C unless stated otherwise)

Parameters		Units	Min	Typical	Max
Supply Voltage (V_{dd})	Operating	V	1.8	2.5	3.6
Current Consumption	Operating (full power)	µA	150	350	550
	Standby	µA		5	
Input Low Voltage		V			0.2 * V_{dd}
Input High Voltage[1]		V	0.6 * V_{dd}		
Power Up Time[2]		ms	-	5*R_{out}*C	-
Mux Switching Time[3]		µs			5
Bandwidth (-3dB)[4]		Hz	800	1000	1200

Notes:

1. Input High Voltage on Pin ST is 0.7 * $V_{dd.}$
2. Power up time is determined by 5 times the RC time constant of the factory programmed or user defined low pass filter.
3. Mux Switching Time is defined as a transition from 10% to 90% with a 10pF load.

4. Factory programmable to have a switched capacitor low pass filter at 2kHz, 1kHz, 500Hz, 100Hz, 50Hz, or no low pass filter. Optionally, the user can define with external capacitors. Maximum defined by the frequency response of the sensors.

36 Thornwood Dr. – Ithaca, NY 14850
tel: 607-257-1080 – fax:607-257-1146
www.kionix.com - info@kionix.com
© 2010 Kionix – All Rights Reserved

Table 3. Environmental

Parameters		Units	Min	Typical	Max
Supply Voltage (V_{dd})	Absolute Limits	V	-0.3	-	6.0
Operating Temperature Range		ºC	-40	-	85
Storage Temperature Range		ºC	-55	-	150
Mech. Shock (powered and unpowered)		g	-	-	5000 for 0.5ms 10000 for 0.2ms
ESD	HBM	V	-	-	3000



Caution: ESD Sensitive and Mechanical Shock Sensitive Component, improper handling can cause permanent damage to the device.



This product conforms to Directive 2002/95/EC of the European Parliament and of the Council of the European Union (RoHS). Specifically, this product does not contain lead, mercury, cadmium, hexavalent chromium, polybrominated biphenyls (PBB), or polybrominated diphenyl ethers (PBDE) above the maximum concentration values (MCV) by weight in any of its homogenous materials. Homogenous materials are "of uniform composition throughout."

HF

This product is halogen-free per IEC 61249-2-21. Specifically, the materials used in this product contain a maximum total halogen content of 1500 ppm with less than 900-ppm bromine and less than 900-ppm chlorine.

Soldering

Soldering recommendations are available upon request or from www.kionix.com.

36 Thornwood Dr. – Ithaca, NY 14850
tel: 607-257-1080 – fax:607-257-1146
www.kionix.com - info@kionix.com

© 2010 Kionix – All Rights Reserved

Application Schematic

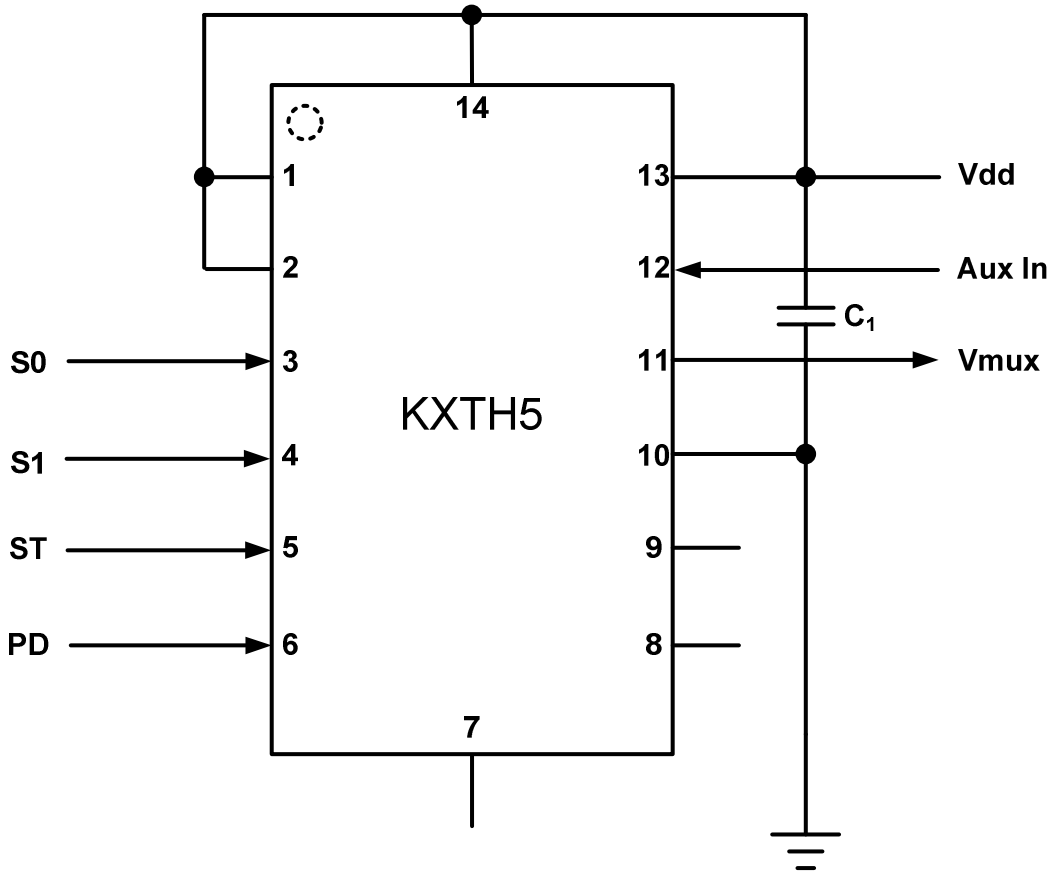

Table 4. KXTH5 Pad Descriptions

Pad	Name	Description
1	Vdd	The power supply input. Decouple this pin to ground with a 0.1uF ceramic capacitor (C_1).
2	NC	Not Connected Internally (can be connected to Vdd or GND)
3	S0	MUX selector 0 (See Output Select Table).
4	S1	MUX selector 1 (See Output Select Table).
5	ST	Self Test: **High** - Device is in self-test mode; **Low** - Normal operation
6	PD	Power shutdown: **Low** - Normal operation; **High** - Device is in standby, power down mode
7	RES	Reserved: Can be connected to GND or left not connected (floated)
8	RES	Reserved: Can be connected to GND or left not connected (floated)
9	RES	Reserved: Can be connected to GND or left not connected (floated)
10	GND	Ground
11	Vmux	Multiplexed analog output.
12	Aux In	Auxiliary input for multiplexer. Connect to Vdd or Ground if not used.
13	Vdd	The power supply input. Decouple this pin to ground with a 0.1uF ceramic capacitor (C_1).
14	Vdd	The power supply input. Decouple this pin to ground with a 0.1uF ceramic capacitor (C_1).

36 Thornwood Dr. – Ithaca, NY 14850
tel: 607-257-1080 – fax:607-257-1146
www.kionix.com - info@kionix.com

© 2010 Kionix – All Rights Reserved

Application Design Equations

The bandwidth is determined by a factory programmable switched capacitor filter. The filter can be set at the factory to be 2kHz, 1kHz, 500Hz, 100Hz, 50Hz, or no low pass filter. Alternatively, bandwidth can be reduced by addition of a capacitor on the output pins 5, 6, and 7 according to the equation:

$$C_2 = C_3 = C_4 = \frac{4.97x10^{-6}}{f_{BW}}$$

USING THE MULTIPLEXED OUTPUT OF THE KXTH5

Multiplexer Data Select

The KXTH5 features an integrated 4-channel multiplexer. This feature reduces system MCU requirements to only 1 ADC and 2 digital I/O's. The KXTH5 uses two select inputs (S0, S1) to control the data flow from Vmux. When a microprocessor toggles the select inputs, the desired output is attained based on the select table. Note that logic 0 is GND and logic 1 is Vdd.

S1	S0	Vmux
0	0	X Output
0	1	Y Output
1	0	Z Output
1	1	Aux In

Output Select Table

Data Sampling Rate

When operating in its multiplexed mode, the KXTH5 has the ability to achieve very high data sampling rates. Internally, the sensor elements (X, Y, and Z) are sequentially sampled in a "round robin" fashion at a rate of 32 kHz per axis. Combine this high sensor element sampling rate with the short 5 µs settling time of the integrated multiplexer, and the user can achieve a performance very close to that of the 3 separate analog outputs. This is more than sufficient to eliminate any aliasing in the final application since the KXTH5 will be operating with a typical bandwidth of ~50Hz and a maximum of 1000Hz.

© 2010 Kionix – All Rights Reserved

Test Specifications

***Special Characteristics**:*

These characteristics have been identified as being critical to the customer. Every part is tested to verify its conformance to specification prior to shipment.

Table 5. Test Specifications

Parameter	Specification	Test Conditions
Zero-g Offset @ RT	1.25 +/- 0.0728 V	25C, Vdd = 2.5 V
Sensitivity @ RT	364 +/- 18 mV/g	25C, Vdd = 2.5 V
Current Consumption -- Operating	150 <= Idd <= 550 uA	25C, Vdd = 2.5 V

36 Thornwood Dr. – Ithaca, NY 14850
tel: 607-257-1080 – fax:607-257-1146
www.kionix.com - info@kionix.com

© 2010 Kionix – All Rights Reserved

Kionix®	**± 2.75g Tri-axis Analog Accelerometer Specifications**	**PART NUMBER:** **KXTH5-4325** **Rev. 2** **Feb-2011**

Package Dimensions and Orientation

3 x 5 x 0.9 mm LGA

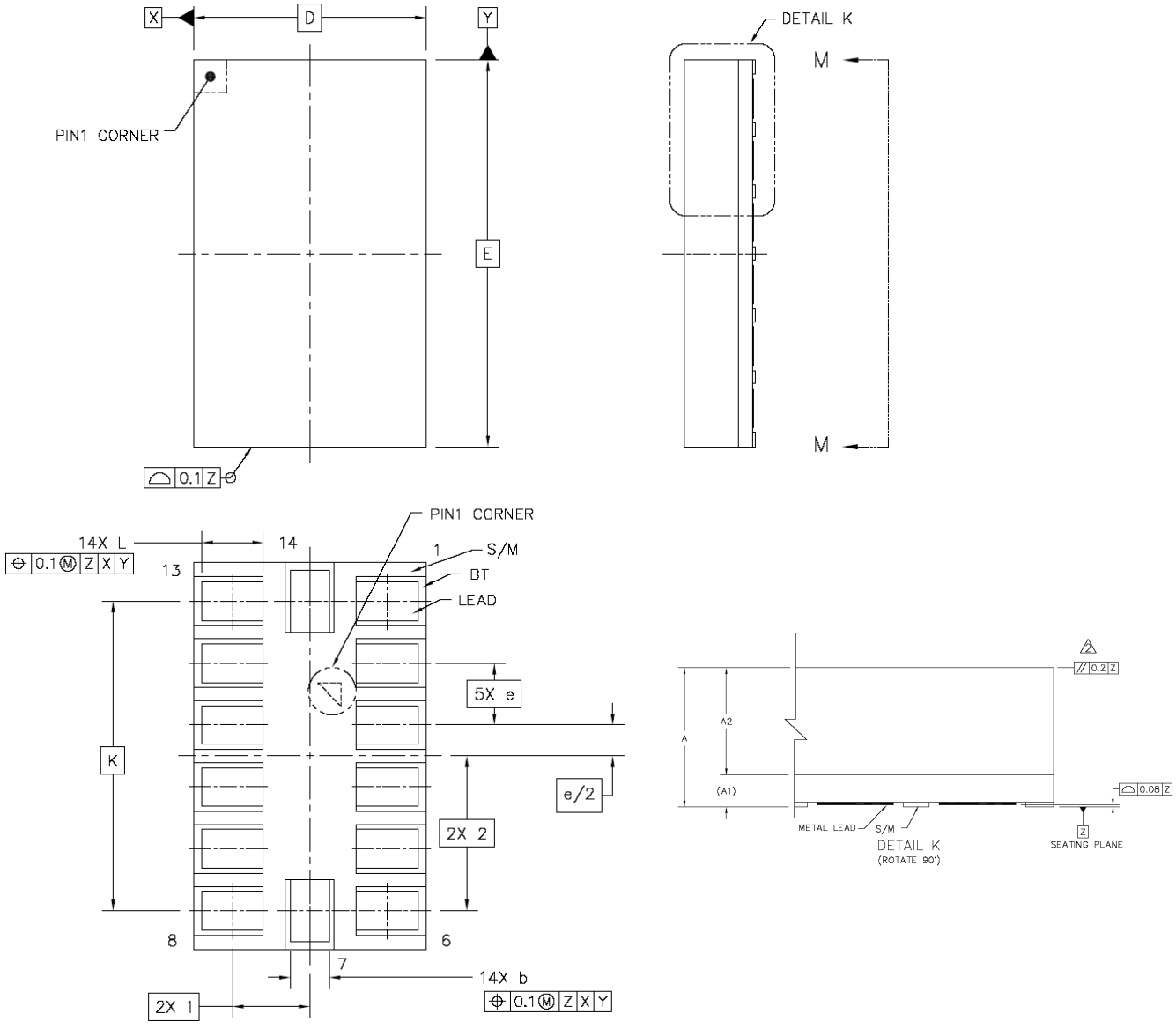

36 Thornwood Dr. – Ithaca, NY 14850
tel: 607-257-1080 – fax:607-257-1146
www.kionix.com - info@kionix.com

© 2010 Kionix – All Rights Reserved

Kionix®	**± 2.75g Tri-axis Analog Accelerometer Specifications**	**PART NUMBER:** **KXTH5-4325** **Rev. 2** **Feb-2011**

Dimension	mm			inch		
	Min	Nom	Max	Min	Nom	Max
A	---	0.91	1.0	---	0.036	0.039
A1		0.21 REF			0.008 REF	
A2	0.66	0.7	0.74	0.026	0.028	0.029
b	0.45	0.5	0.55	0.018	0.020	0.022
D	2.8	3.0	3.2	0.110	0.118	0.126
E	4.8	5.0	5.2	0.189	0.197	0.205
K	3.9	4.0	4.1	0.153	0.157	0.161
e	0.78	0.8	0.82	0.030	0.031	0.032
L	0.75	0.8	0.85	0.029	0.031	0.033

All dimensions and tolerances conform to ASME Y14.5M-1994

Orientation

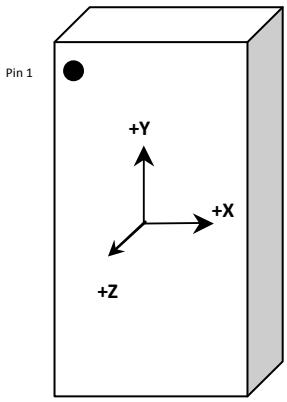

When device is accelerated in +X, +Y or +Z direction, the corresponding output will increase.

36 Thornwood Dr. – Ithaca, NY 14850
tel: 607-257-1080 – fax:607-257-1146
www.kionix.com - info@kionix.com

© 2010 Kionix – All Rights Reserved

Kionix®	**± 2.75g Tri-axis Analog Accelerometer Specifications**	**PART NUMBER:** **KXTH5-4325** **Rev. 2** **Feb-2011**

Static X/Y/Z Output Response versus Orientation to Earth's surface (1-g):

Position	1	2	3	4	5	6
Diagram					Top 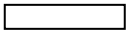 Bottom	Bottom 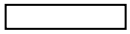 Top
X	1.25 V	1.614 V	1.25 V	0.886 V	1.25 V	1.25 V
Y	1.614 V	1.25 V	0.886 V	1.25 V	1.25 V	1.25 V
Z	1.25 V	1.25 V	1.25 V	1.25 V	1.614 V	0.886 V
X-Polarity	**0**	**+**	**0**	**-**	**0**	**0**
Y-Polarity	**+**	**0**	**-**	**0**	**0**	**0**
Z-Polarity	**0**	**0**	**0**	**0**	**+**	**-**

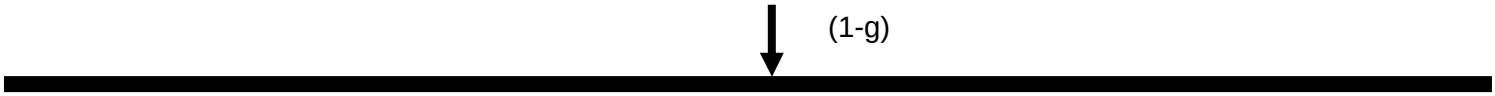

36 Thornwood Dr. – Ithaca, NY 14850
tel: 607-257-1080 – fax:607-257-1146
www.kionix.com - info@kionix.com

© 2010 Kionix – All Rights Reserved

Kionix®	**± 2.75g Tri-axis Analog Accelerometer Specifications**	**PART NUMBER:** **KXTH5-4325** **Rev. 2** **Feb-2011**

Revision History

REVISION	DESCRIPTION	DATE
1	Initial Production Release.	20-Jan-2011
2	Corrected Input High Voltages in Table 2	10-Feb-2011

"Kionix" is a registered trademark of Kionix, Inc. Products described herein are protected by patents issued or pending. No license is granted by implication or otherwise under any patent or other rights of Kionix. The information contained herein is believed to be accurate and reliable but is not guaranteed. Kionix does not assume responsibility for its use or distribution. Kionix also reserves the right to change product specifications or discontinue this product at any time without prior notice. This publication supersedes and replaces all information previously supplied.

36 Thornwood Dr. – Ithaca, NY 14850
tel: 607-257-1080 – fax:607-257-1146
www.kionix.com - info@kionix.com

© 2010 Kionix – All Rights Reserved

Mouser Electronics

Authorized Distributor

Click to View Pricing, Inventory, Delivery & Lifecycle Information:

Kionix:
KXTH5-4325