2D Drawing	IGES	STEP	3D PDF
Solder Profile	CofC RoHS Compliant	CofC REACH Compliant	UL Plastic File
Certificate of Origin	Check Stock	Request a Sample	Send Us An Email

Generated Part Number

KUSB67X-SMTTH-CS4-B30TR

Part Number Builder

KUSB67X-SMTTH	–	CS4	B	30	TR
Series		Type	Insulator Color	Plating	Packaging

Series
KUSB67X-SMTTH - USB Type C, IP67 rated, SMT & Thru Hole Leads

Type
CS4 - C Type

Insulator Color Option
B - Black

Plating Options
Blank - Gold Flash
30 - 30µ" Gold Plating

Packaging
TR - Tape and Reel

Contact Kycon for more options

Universal Serial Bus: KUSB67X-SMTTH-CS4
Type C®, USB 3.2 Socket. IP67 Rated

Product Features
USB Version 3.2 Gen 2 - 10Gbps
IP67 Rated
Hybrid SMT and Through Hole
Leads with Through Hole Shield Tabs

Performance Specifications
Materials and Finish
Housing
High Temperature Thermoplastic, UL94V-0 Rated, Black Color
Shield
Stainless Steel, Nickel Plated
Contact Material
Copper Alloy
Contact plating
Gold on Contact Area, Tin plated on Solder tails, all over Nickel Underplate

Electrical Characteristics
Rated Current
5.0A Inclusive (1.25A Ea.) For Pins A4, A9, B4,and B9 (VBUS), 1.25A For Pin B5 (VCONN)
6.25A Inclusive For Pins A1, A12, B1, B12 (GND) and Shield
0.25A For All Other Pins
Rated Voltage
30V
Insulation Resistance
100 Megohms Min. at 100V DC
Contact Resistance
40 milliohms Max.
Dielectric Withstanding Voltage
100V AC RMS for 1 Minute

Mechanical Characteristics
Insertion Force
5N - 20N
Withdrawal Force
6N - 20N
Durability
10000 Mating Cycles Min.
Operating Temperature
-40°C to +85°C

KUSB67X-SMTTH
Dimensions in mm

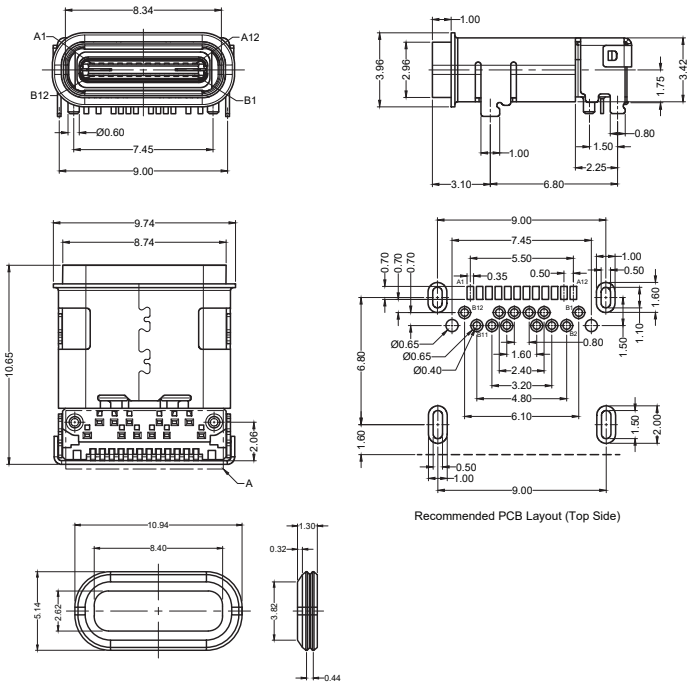

*KUSB67X-SMTTH-Gasket included