cosmo

KTLP3502 Series

8PIN RANDOM-PHASE TRIAC DRIVER PHOTOCOUPLER

Description

The KTLP3502 series consist of a GaAs infrared emitting diode optically coupled to an non-zero-crossing silicon bilateral TRIAC and a main output power TRIAC. These devices isolate low voltage logic from 115 VAC lines to provide random phase control of high current TRIACs or thyristors. These devices feature greatly enhanced static dv/dt capability to ensure stable switching performance of inductive loads.

Schematic

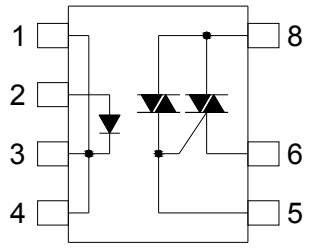

1. Cathode
2. Anode
3. Cathode
4. Cathode
5. Gate
6. T1
8. T2

Features

1. Pb free and RoHS compliant
2. 400V peak blocking voltage
3. On-State R.M.S Current 0.5A.
4. Simplifies logic control of 115 VAC power
5. Non zero voltage crossing
6. Isolation voltage between input and output (Viso：5300Vms)
7. MSL class 1
8. Agency Approvals：
   - UL Approved (No. E169586): UL1577
   - c-UL Approved (No. E169586)
   - VDE Approved (No. 40020973): DIN EN60747-5-5

Applications

- TRIAC driver
- Programmable controllers
- AC-output module
- Solid state relay
- Isolated interface between high voltage AC devices and lower voltage DC control circuitry
- Switching motors, fans, heaters, solenoids and valves
- Phase or power control in applications, such as lighting and temperature control equipment

● Outside Dimension

Unit：mm

1. Dual-in-line type.

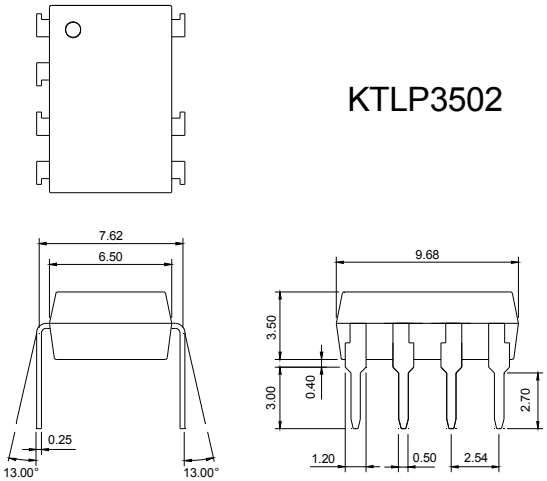

2. Surface mount type.

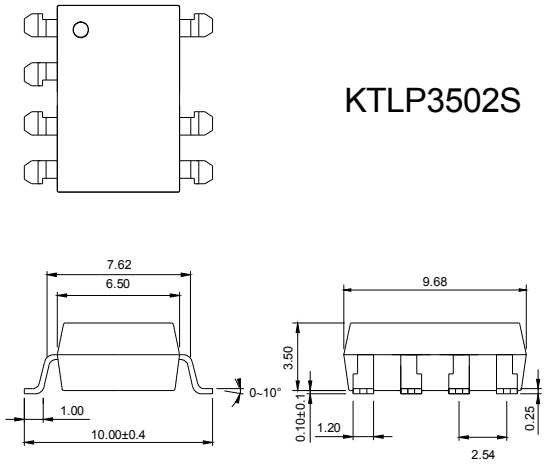

3. Long creepage distance type.

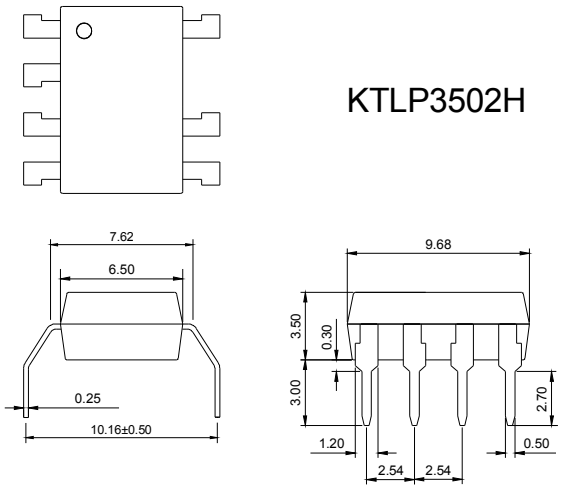

4. Long creepage distance for surface mount type.

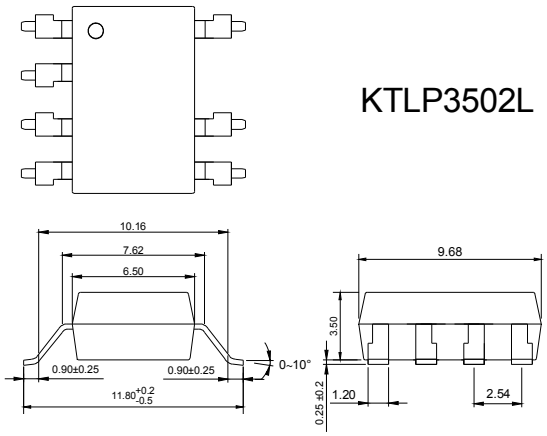

TOLERANCE：±0.2mm

● Device Marking

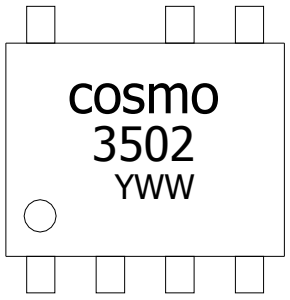

Notes：

cosmo
3502
YWW　Y：Year code / W：Week code

● Absolute Maximum Ratings

(Ta=25℃)

Parameter		Symbol	Rating	Unit
Input	Forward current	I_F	50	mA
	Peak forward current	I_{FM}	1	A
	Reverse voltage	V_R	6	V
	Power dissipation	P_D	70	mW
Output	Off-state output terminal voltage	V_{DRM}	400	V_{PEAK}
	On-state R.M.S. current	$I_{T(RMS)}$	0.5	A
	Peak repetitive surge current (60Hz , Peak)	I_{TSM}	5	A
Isolation voltage 1 minute		V_{iso}	5300	Vrms
Operating temperature		T_{opr}	-40 to +115	℃
Storage temperature		T_{stg}	-50 to +125	℃
Soldering temperature 10 seconds		T_{sol}	260	℃

● Electro-optical Characteristics

(Ta=25℃)

Parameter		Symbol	Conditions	Min.	Typ.	Max.	Unit
Input	Forward voltage	V_F	I_F=10mA	-	1.2	1.4	V
	Reverse current	I_R	V_R=4V	-	-	10	μA
Output	Peak blocking current	I_{DRM}	V_{DRM} Rated	-	-	100	μA
	On-state voltage	V_{TM}	I_{TM}=0.5A	-	-	3	V
Transfer charac-teristics	Holding current	I_H		-	-	25	mA
	Critical rate of rise of off-state voltage	dv/dt	V_{DRM}=(1/$\sqrt{2}$)*Rated	-	1000	-	V/μs
	Isolation resistance	R_{iso}	DC500V	$5x10^{10}$	-	-	Ω
	Minimum trigger current	I_{FT}	Main terminal voltage=3V	-	-	10	mA

Fig.1 Forward Current e vs. Ambient Temperature

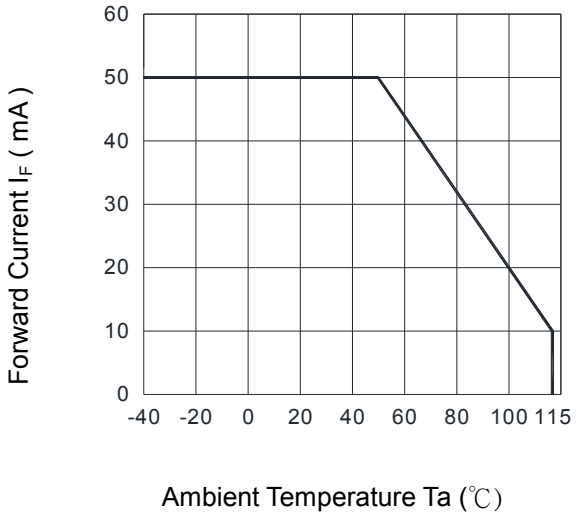

Fig.2 On-State R.M.S. Current vs. Ambient Temperature

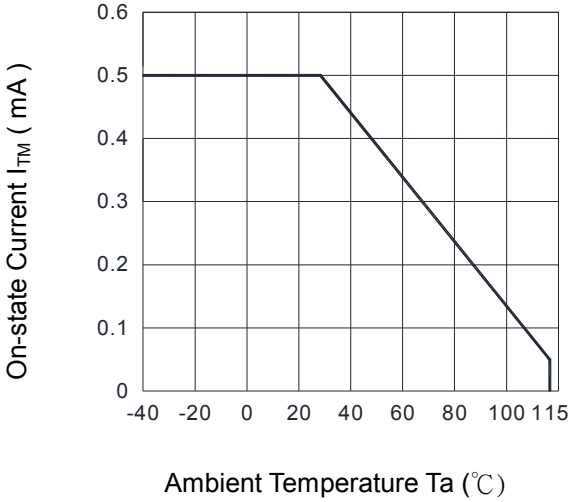

Fig.3 Peak Forward Current vs. Duty Ratio

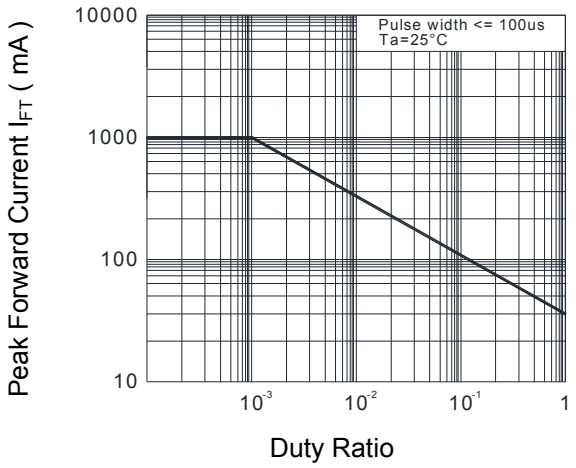

Fig.4 Forward Current vs. Forward Voltage

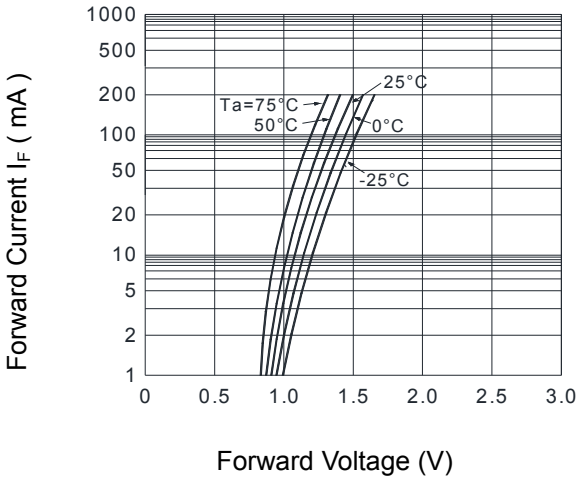

Fig.5 Trigger Current vs. Ambient Temperature

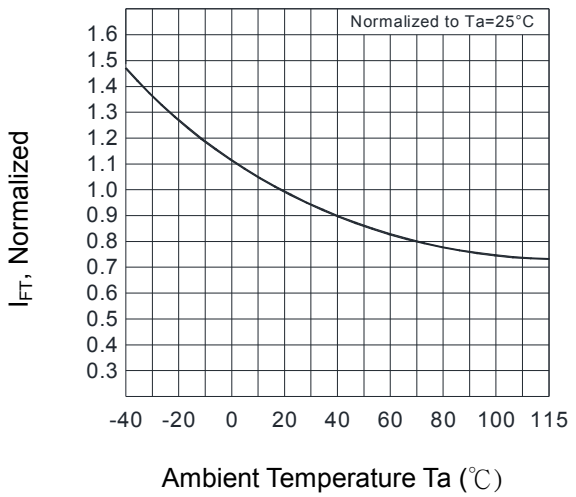

Fig.6 Leakage with LED off vs. Ambient Temperature

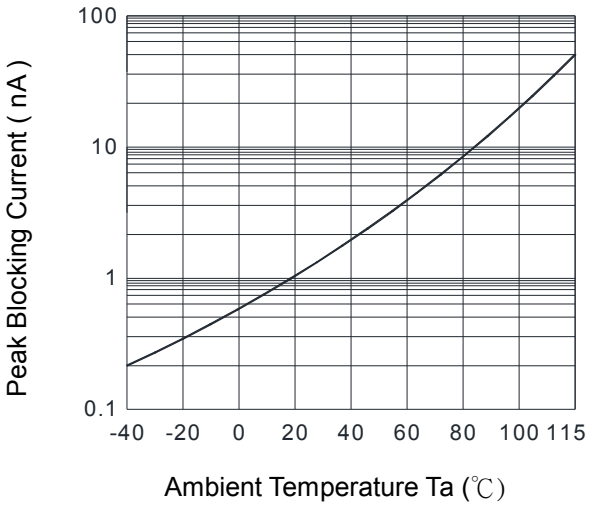

Fig.7 On-state Characteristics

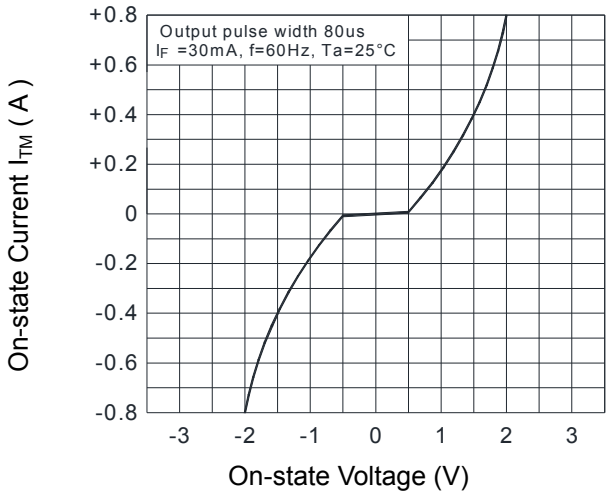

● Recommended Soldering Conditions

(a) Infrared reflow soldering：

- ■ Peak reflow soldering： 260℃ or below (package surface temperature)
- ■ Time of peak reflow temperature： 10 sec
- ■ Time of temperature higher than 230℃： 30-60 sec
- ■ Time to preheat temperature from 180~190℃： 60-120 sec
- ■ Time(s) of reflow： Two
- ■ Flux： Rosin flux containing small amount of chlorine (The flux with a maximum chlorine content of 0.2 Wt% is recommended.)

Recommended Temperature Profile of Infrared Reflow

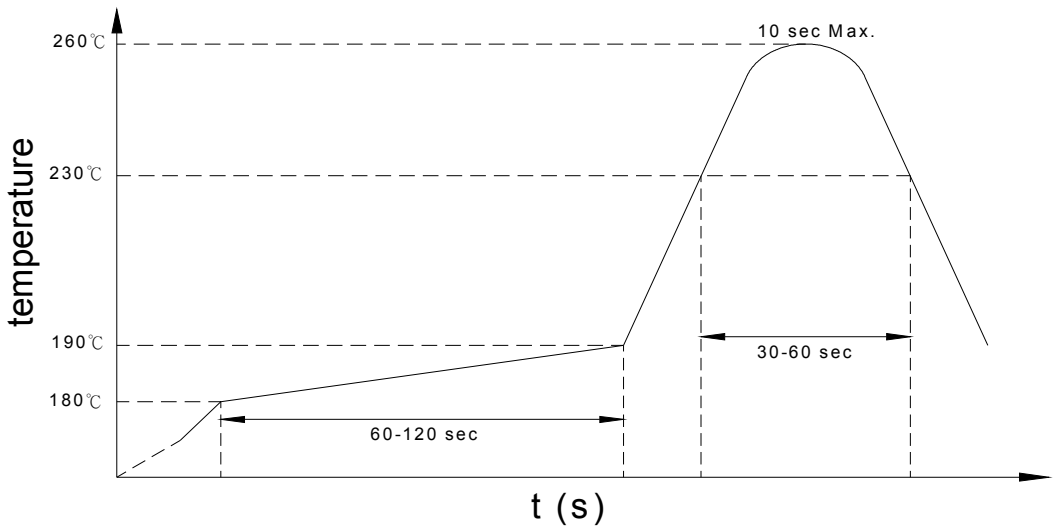

(a) Wave soldering：

- ■ Temperature： 260℃ or below (molten solder temperature)
- ■ Time： 10 seconds or less
- ■ Preheating conditions： 120℃ or below (package surface temperature)
- ■ Time(s) of reflow： One
- ■ Flux： Rosin flux containing small amount of chlorine (The flux with a maximum chlorine content of 0.2 Wt% is recommended.)

(a) Cautions：

- ■ Fluxes： Avoid removing the residual flux with freon-based and chlorine-based cleaning solvent.
- ■ Avoid shorting between portion of frame and leads.

● Numbering System

KTLP3502 X (Y)

Notes:

KTLP3502 = Part No.

X = Lead form option (blank、S、H、L)

Y = Tape and reel option (TL、TR、TLD、TRU)

Option	Description	Packing quantity
S (TL)	surface mount type package + TL tape & reel option	1000 units per reel
S (TR)	surface mount type package + TR tape & reel option	1000 units per reel
L (TLD)	long creepage distance for surface mount type package + TLD tape & reel option	800 units per reel
L (TRU)	long creepage distance for surface mount type package + TRU tape & reel option	800 units per reel

● Recommended Pad Layout for Surface Mount Lead Form

1. Surface mount type.

8-pin SMD

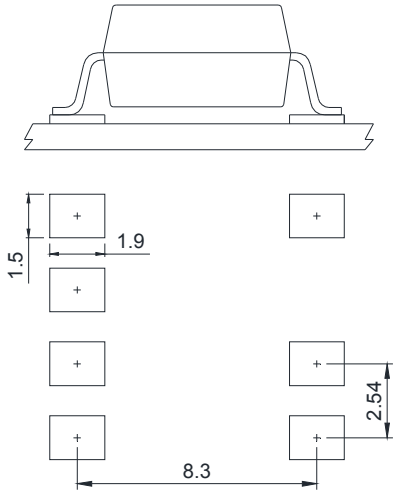

2. Long creepage distance for surface mount type.

8-pin L

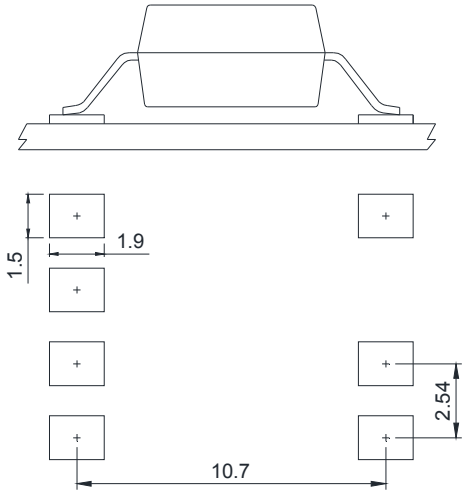

Unit：mm

● SMD Carrier Tape & Reel

unit：mm

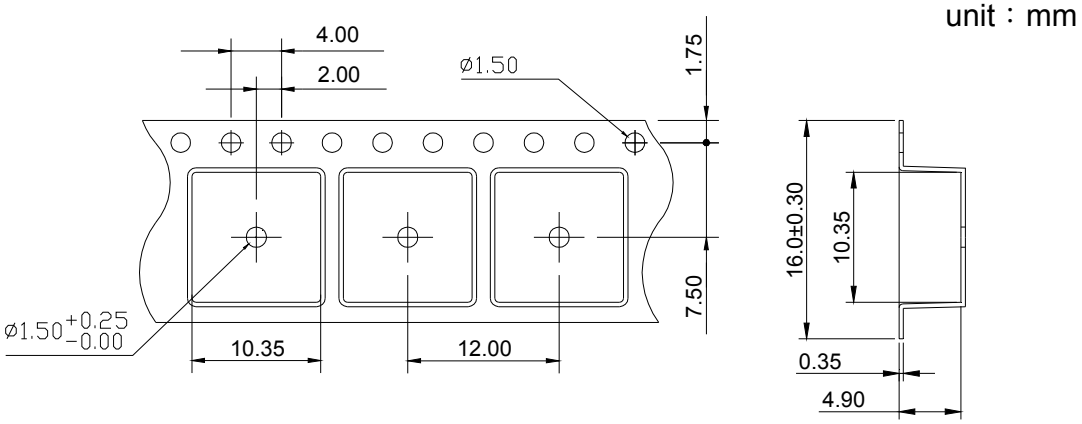

TOLERANCE：±0.2mm

TL

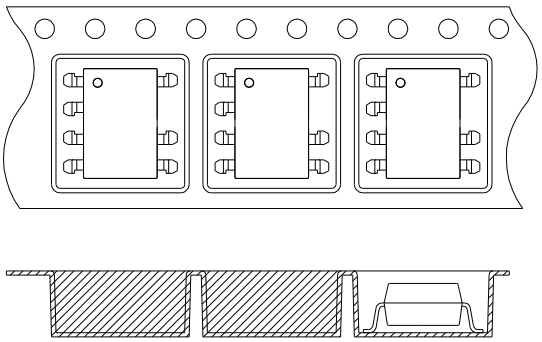

Direction of feed from reel

TR

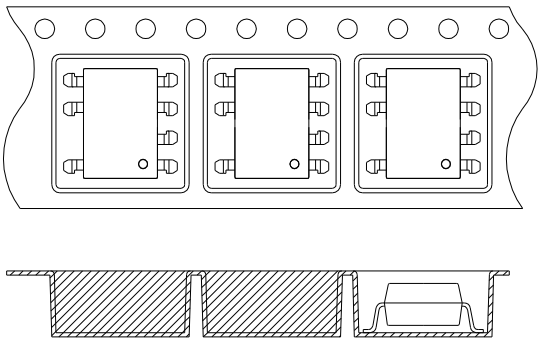

Direction of feed from reel

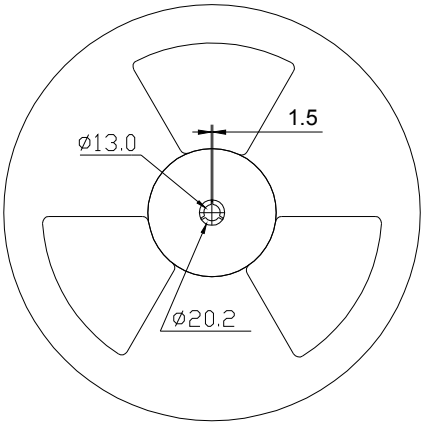

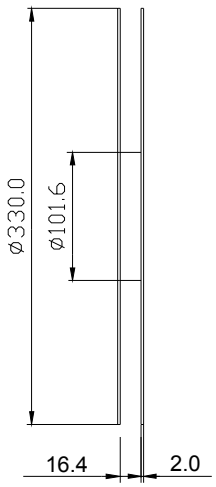

● L Carrier Tape & Reel

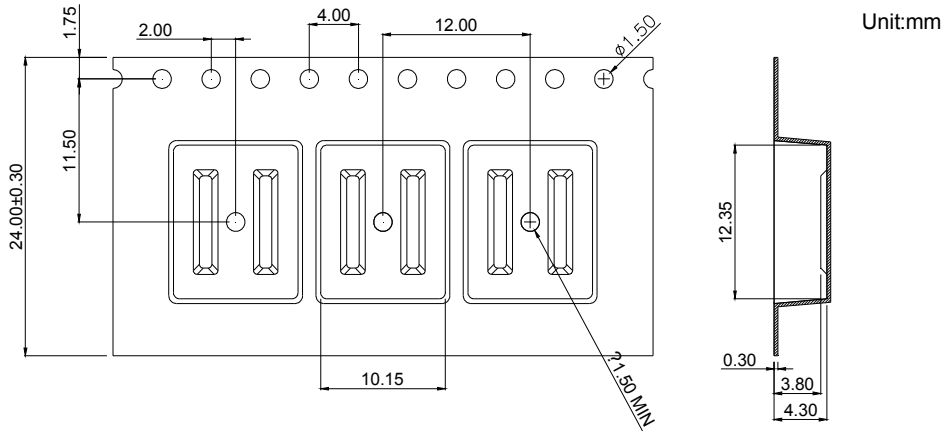

TOLERANCE：±0.2mm

TLD

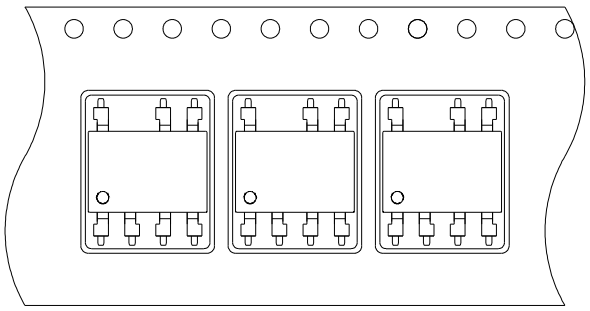

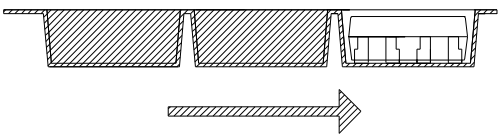

Direction of feed from reel

TRU

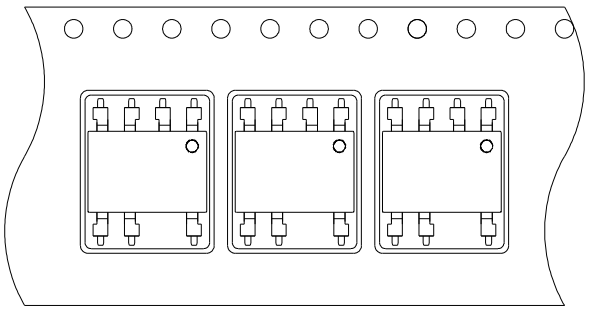

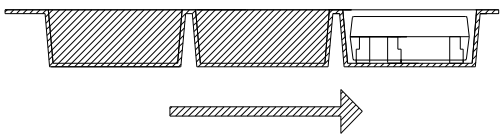

Direction of feed from reel

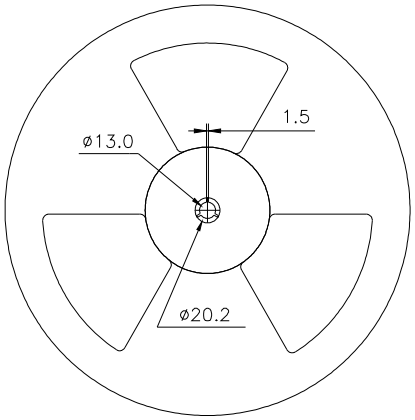

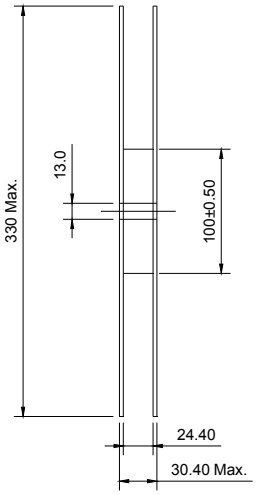

Application Notice

The content of datasheet is the guidance for product use only. cosmo takes no responsibility to the accuracy of the information provided here. For continuously improving all of products, including quality, reliability, function...etc., cosmo reserves the right to change the specification, characteristics, data, materials, and structure of products without notice. Please contact with cosmo to obtain the latest specification.

It would be required to comply with the absolute maximum ratings listed in the specification. cosmo has no liability and responsibility to the damage caused by improper use of the products.

cosmo products are intended to be designed for use in general electronics application list below:

a. Personal computer
b. OA machine
c. Audio / Video
d. Instrumentation
e. Electrical application
f. Measurement equipment
g. Consumer electronics
h. Telecommunication

cosmo devices shall not be used or related with equipment requiring higher level of quality / reliability, or malfunction, or failure which may cause loss of human life, bodily injury, includes, without limitation:

a. Medical and other life supporting equipments
b. Space application
c. Telecommunication equipment (trunk lines)
d. Nuclear power control
e. Equipment used for automotive vehicles, trains, ships...etc.

This publication is the property of cosmo. No part of this publication may be reproduced or copied in any form or any means electronically or mechanically for any purpose, in whole or in part without any written permission expressed from cosmo.