KPTD-3216EC HIGH EFFICIENCY RED

KPTD-3216SGC SUPER BRIGHT GREEN

KPTD-3216YC YELLOW

Features

- 3.2mmx1.6mm SMT LED, 1.8mm THICKNESS.
- LOW POWER CONSUMPTION.
- WIDE VIEWING ANGLE.
- IDEAL FOR BACKLIGHT AND INDICATOR.
- VARIOUS COLORS AND LENS TYPES AVAILABLE.
- PACKAGE : 2000PCS / REEL.

Description

The High Efficiency Red source color devices are made with Gallium Arsenide Phosphide on Gallium Phosphide Orange Light Emitting Diode.

The Super Bright Green source color devices are made with Gallium Phosphide Green Light Emitting Diode.

The Yellow source color devices are made with Gallium Arsenide Phosphide on Gallium Phosphide Yellow Light Emitting Diode.

Package Dimensions

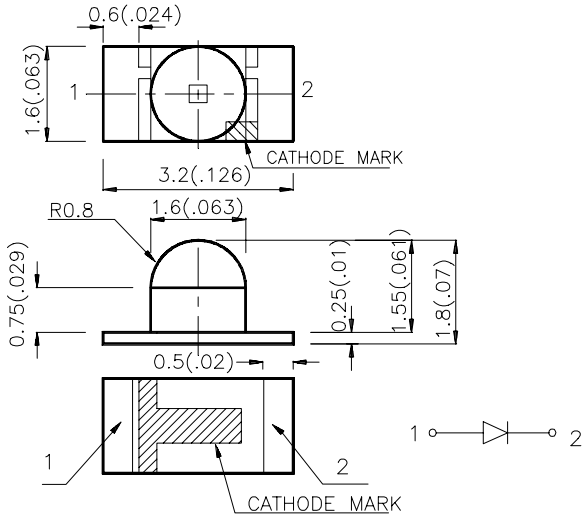

Notes:
1. All dimensions are in millimeters (inches).
2. Tolerance is ±0.2(0.0079") unless otherwise noted.
3. Lead spacing is measured where the lead emerge package.
4. Specifications are subject to change without notice.

Selection Guide

Part No.	Dice	Lens Type	Iv (mcd) @ 20 mA		Viewing Angle
			Min.	Typ.	2θ1/2
KPTD-3216EC	HIGH EFFICIENCY RED(GaAsP/GaP)	WATER CLEAR	10	50	40°
KPTD-3216SGC	SUPER BRIGHT GREEN (GaP)	WATER CLEAR	5	20	40°
KPTD-3216YC	YELLOW (GaAsP/GaP)	WATER CLEAR	3	30	40°

Note:
1. θ1/2 is the angle from optical centerline where the luminous intensity is 1/2 the optical centerline value.

Electrical / Optical Characteristics at T_A=25°C

Symbol	Parameter	Device	Typ.	Max.	Units	Test Conditions
λpeak	Peak Wavelength	High Efficiency Red Super Bright Green Yellow	627 565 590		nm	IF=20mA
λ D	Dominate Wavelength	High Efficiency Red Super Bright Green Yellow	625 568 588		nm	IF=20mA
Δλ1/2	Spectral Line Halfwidth	High Efficiency Red Super Bright Green Yellow	45 30 35		nm	IF=20mA
C	Capacitance	High Efficiency Red Super Bright Green Yellow	15 15 20		pF	VF=0V;f=1MHz
V_F	Forward Voltage	High Efficiency Red Super Bright Green Yellow	2.0 2.2 2.1	2.5 2.5 2.5	V	IF=20mA
I_R	Reverse Current	High Efficiency Red Super Bright Green Yellow		10	uA	VR = 5V

Absolute Maximum Ratings at T_A=25°C

Parameter	High Efficiency red	Super Bright Green	Yellow	Units
Power dissipation	105	105	105	mW
DC Forward Current	30	25	30	mA
Peak Forward Current [1]	160	140	140	mA
Reverse Voltage	5	5	5	V
Operating Temperature	-40°C To +85°C			
Storage Temperature	-40°C To +85°C			

Note:
1. 1/10 Duty Cycle, 0.1ms Pulse Width.

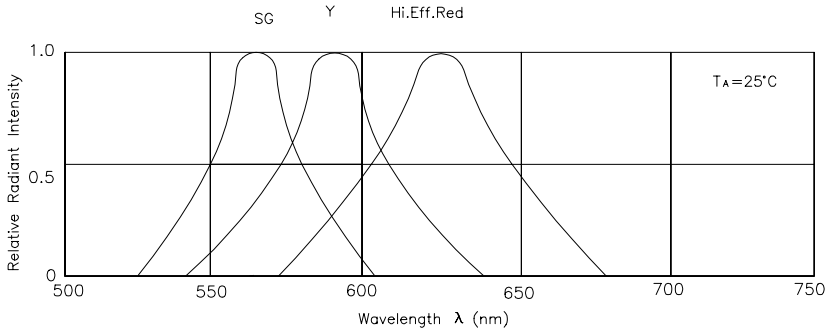

RELATIVE INTENSITY Vs. WAVELENGTH

High Efficiency Red KPTD-3216EC

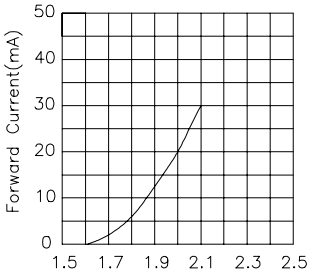

FORWARD CURRENT Vs
FORWARD VOLTAGE

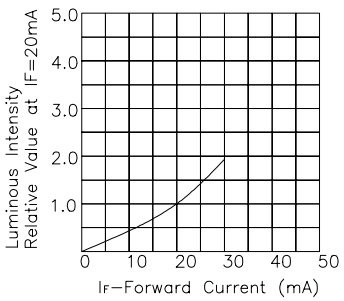

LUMINOUS INTENSITY Vs.
FORWARD CURRENT

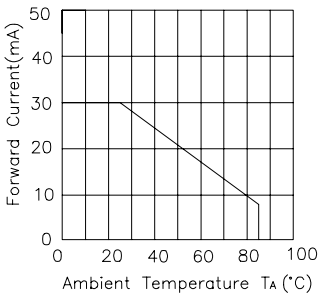

FORWARD CURRENT
DERATING CURVE

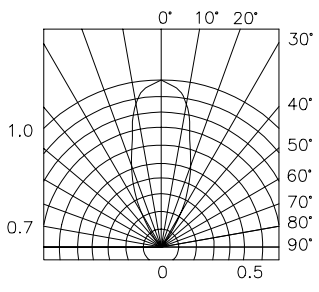

SPATIAL DISTRIBUTION

Super Bright Green KPTD-3216SGC

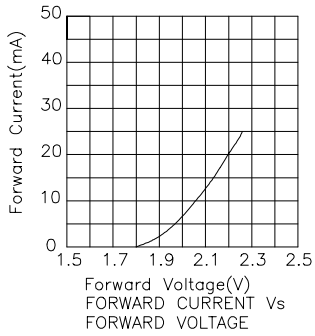

FORWARD CURRENT Vs
FORWARD VOLTAGE

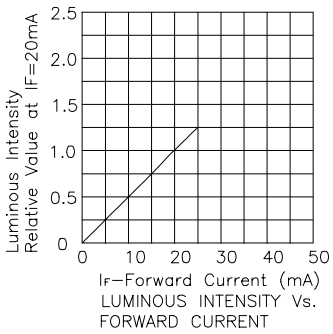

LUMINOUS INTENSITY Vs.
FORWARD CURRENT

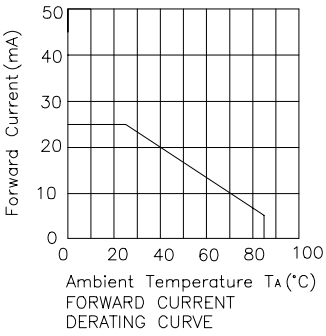

FORWARD CURRENT
DERATING CURVE

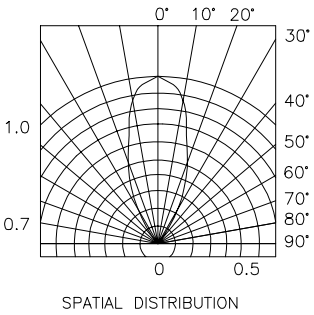

SPATIAL DISTRIBUTION

Yellow KPTD-3216YC

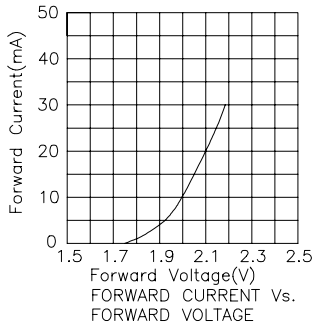

FORWARD CURRENT Vs.
FORWARD VOLTAGE

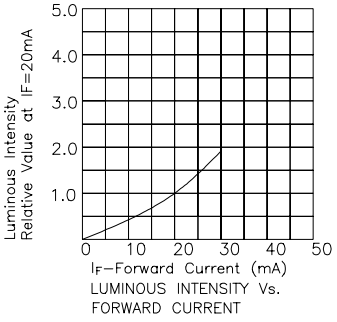

LUMINOUS INTENSITY Vs.
FORWARD CURRENT

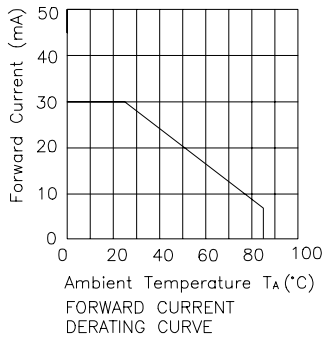

FORWARD CURRENT
DERATING CURVE

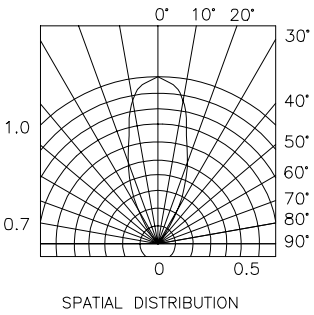

SPATIAL DISTRIBUTION

KPTD-3216
SMT Reflow Soldering Instructions

Number of reflow process shall be less than 2 times and cooling process to normal temperature is required between first and second soldering process.

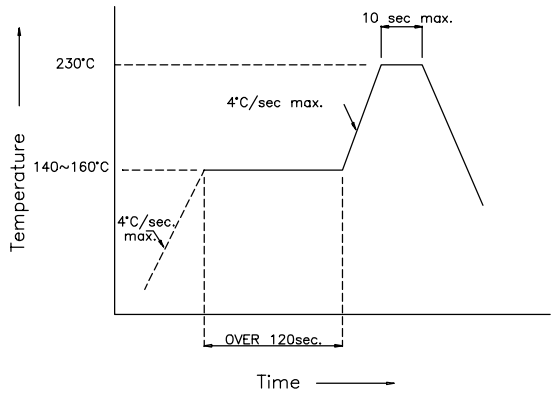

Recommended Soldering Pattern
(Units : mm)

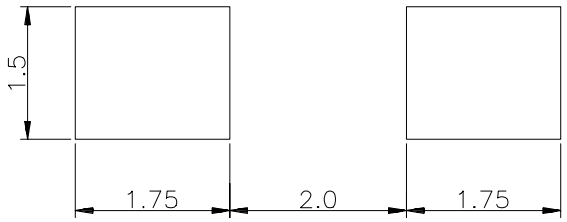

Tape Specifications
(Units : mm)

