November 2007

Absolute Pressure Sensor

KP123

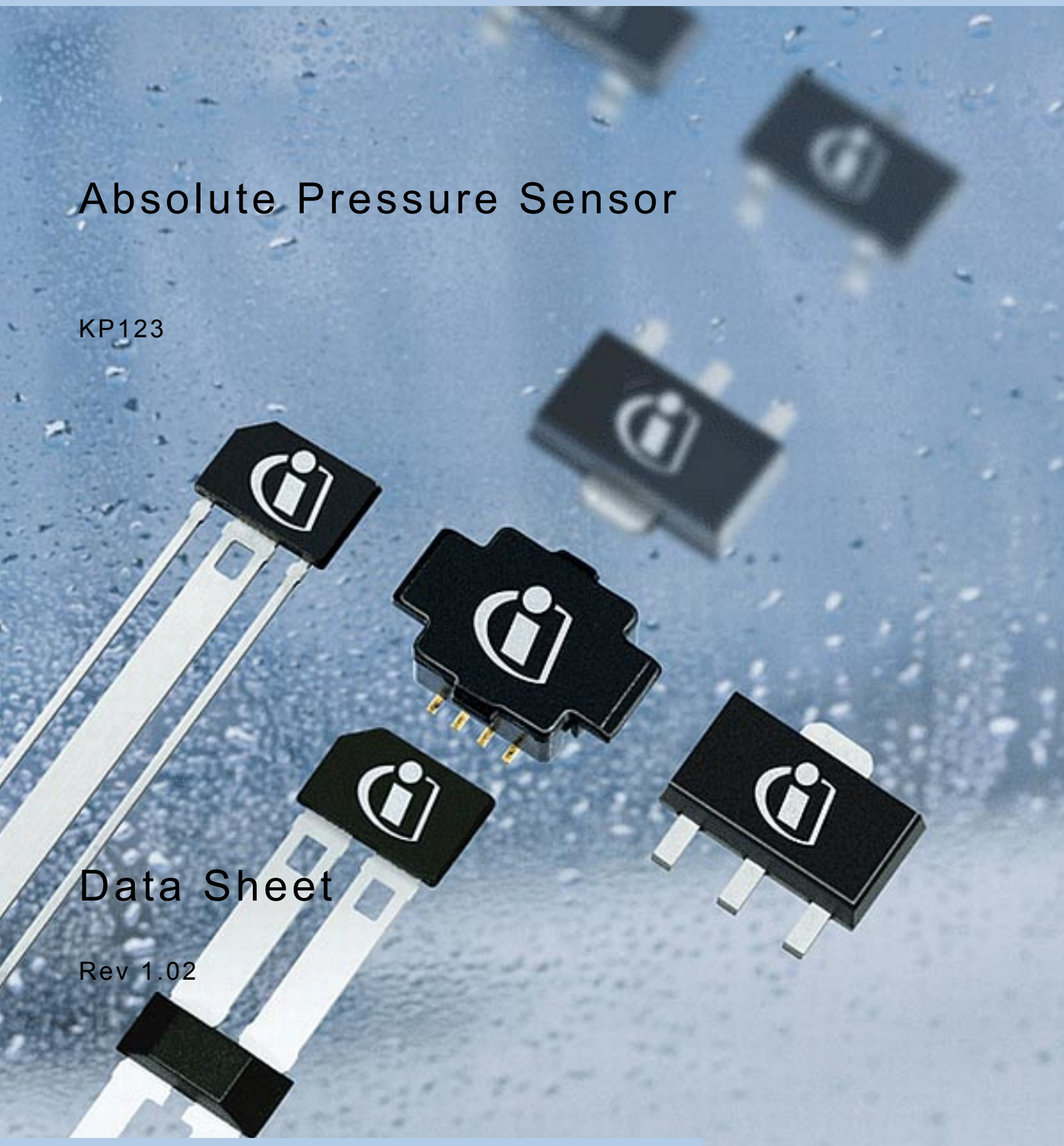

Data Sheet

Rev 1.02

Sense & Control

Never stop thinking

Edition 2007-11-23

Published by
Infineon Technologies AG
81726 München, Germany

© 2007 Infineon Technologies AG
All Rights Reserved.

Legal Disclaimer

The information given in this document shall in no event be regarded as a guarantee of conditions or characteristics. With respect to any examples or hints given herein, any typical values stated herein and/or any information regarding the application of the device, Infineon Technologies hereby disclaims any and all warranties and liabilities of any kind, including without limitation, warranties of non-infringement of intellectual property rights of any third party.

Information

For further information on technology, delivery terms and conditions and prices, please contact the nearest Infineon Technologies Office (**www.infineon.com**).

Warnings

Due to technical requirements, components may contain dangerous substances. For information on the types in question, please contact the nearest Infineon Technologies Office.

Infineon Technologies components may be used in life-support devices or systems only with the express written approval of Infineon Technologies, if a failure of such components can reasonably be expected to cause the failure of that life-support device or system or to affect the safety or effectiveness of that device or system. Life support devices or systems are intended to be implanted in the human body or to support and/or maintain and sustain and/or protect human life. If they fail, it is reasonable to assume that the health of the user or other persons may be endangered.

1 Overview . . . 5
1.1 Features . . . 5
1.2 Product Description . . . 5
2 Pin Configuration . . . 6
3 Functional Block Diagram . . . 7
4 Functional Description . . . 8
4.1 Sensor . . . 8
4.2 Transfer Function . . . 9
5 Electrical Characteristics . . . 10
5.1 Absolute Maximum Ratings . . . 10
5.2 Operating Range . . . 11
5.3 Sensor Characteristics . . . 12
5.4 Electrical Details . . . 13
5.4.1 Output Voltage versus Load . . . 13
5.4.2 Timings . . . 14
6 Accuracy . . . 15
6.1 Supply Voltage Influence (Ratiometric Error) . . . 15
6.2 Overall Accuracy . . . 16
7 Application Circuit . . . 17
8 Package . . . 18
9 Package Outlines . . . 19
9.1 Package Dimensions . . . 19
9.2 Cap dimensions . . . 20
9.3 Footprint . . . 21
10 EMC Requirements . . . 22
10.1 EM Immunity by Direct Power Injection . . . 22
10.2 EM Immunity by Electrical Fast Transients . . . 22
11 Identification Code . . . 23

Absolute Pressure Sensor

Revision History: 2007-11-23, Rev 1.02

Previous Version: Rev 0.1	
Page	**Subjects (major changes since last revision)**
Page 5	Feature “green” package added.
Page 5	Paragraph about pressure range rephrased.
Page 10	ESD robustness corrected.
Page 10 Page 11	Symbol for input pressure range (max and operating) added/changed.
Page 12	Junction temperature added.
Page 15	Definition ratiometric error rephrased. Formula added.
Page 17 Page 23	Misspelling corrected.
Page 19	Drawing updated.
Page 19	“Green” compliancy added in package chapter.
Page 22	Chapter EMC added.
Page 23	Chapter identification code added.
Previous Version: Rev 0.9	
Page 17	Changes in recommended application circuit.
Page 18 Page 19	Reorganization of chapters package outlines and cap.
Previous Version: Rev 1.0	
Page 6	Changes according to application circuit for GND connection and digital PINs.
Previous Version: Rev 1.01	
Page 12	Correction of sensor characteristics output referred noise.

We Listen to Your Comments

Any information within this document that you feel is wrong, unclear or missing at all?
Your feedback will help us to continuously improve the quality of this document.
Please send your proposal (including a reference to this document) to:

sensors@infineon.com

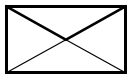

1 Overview

1.1 Features

- Ratiometric analog output
- Calibrated transfer function
- High accuracy over a large temperature range
- Typical error ± 1.5% Full Scale Range
- “Green” 8-pin SMD housing
- On Board Diagnostics (OBD) for broken wire detection

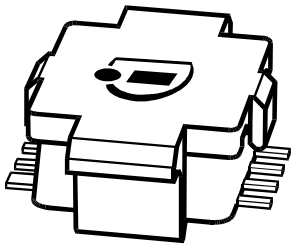

PG-DSOF-8-12
with cap

1.2 Product Description

The KP123 is a miniaturized Absolute Pressure Sensor IC based on the capacitive principle. It is surface micromachined with a monolithic integrated signal conditioning circuit implemented in BiCMOS standard technology. Because the KP123 is a high-precision IC for cost-critical solutions, the chip is packaged in a “green” low-cost SMD housing. The sensor is developed for measurement of barometric air pressure (BAP).

High accuracy and high sensitivity enable the deployment of this device in consumer applications.

The calibrated transfer function converts a pressure range from 15 kPa to 115 kPa into an analog output voltage between 0.2 V and 4.7 V.

Product Name	Product Type	Ordering Code	Package
KP123	Absolute Pressure Sensor	SP000239576	PG-DSOF-8-12

2 Pin Configuration

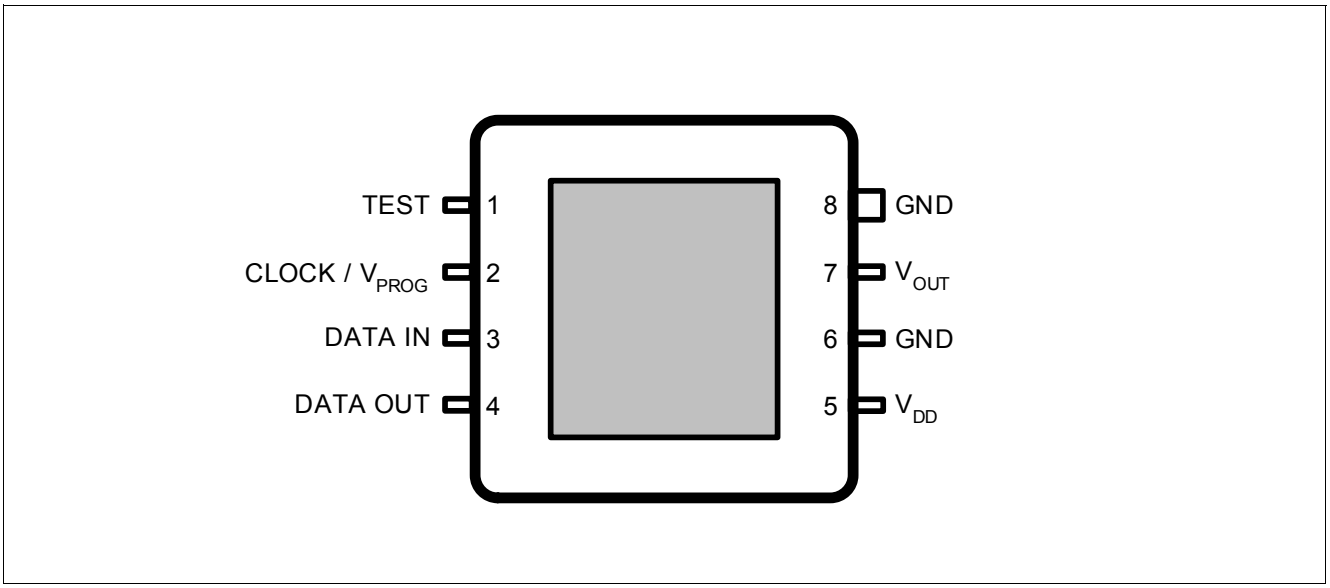

Figure 1 Pin Configuration (top view, figure not to scale)

Table 1 Pin Definitions and Functions

Pin No.	Name	Function
1	TEST	Test pin [1]
2	CLOCK / V_{PROG}	External Clock for Communication / Programming Voltage [1]
3	DATA IN	Serial data input pin [1]
4	DATA OUT	Serial data output pin [1]
5	V_{DD}	Supply Voltage
6	GND	0 Volt circuit ground potential [2]
7	V_{OUT}	Analog pressure signal output
8	GND	Alternative ground pin [2]

1) Digital pins are used only during calibration and test. It is recommended to leave these PINs floating.

2) It is recommended to connect both GND PINs.

3 Functional Block Diagram

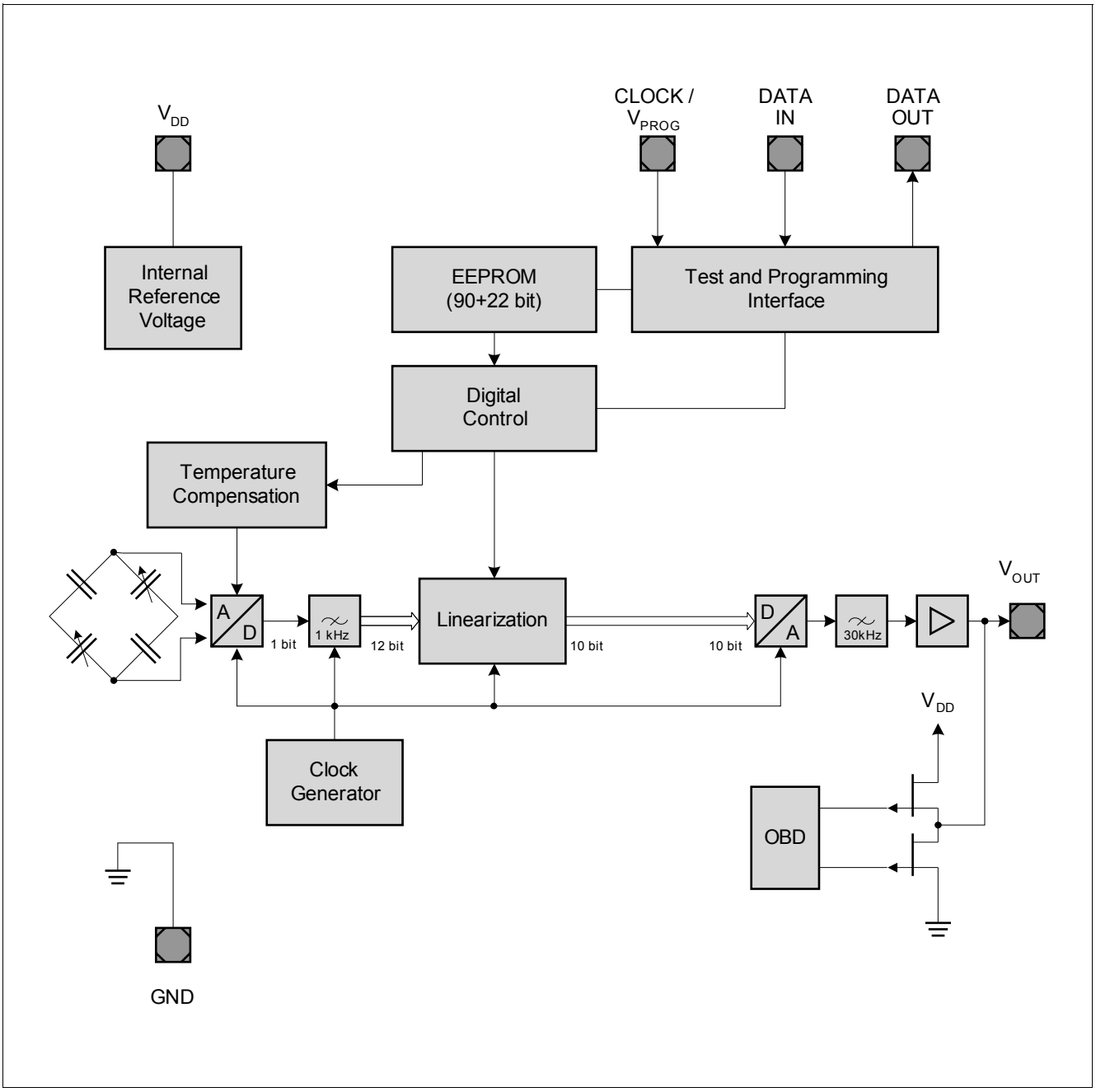

Figure 2 Block Diagram

4 Functional Description

4.1 Sensor

Pressure is detected in a capacitive way by an array of surface micromachined sensor cells.

The sensor cell output is amplified, temperature compensated and linearized to obtain an output voltage that is proportional to the applied pressure.

The transfer function for linearization is calculated in the digital part of the sensor using third order polynomial calculation.

The transfer function is given by the following parameters:

- Minimum and maximum rated pressure
- Voltage at minimum rated pressure
- Voltage at maximum rated pressure
- Sensitivity

The output is analog and ratiometric with respect to the supply voltage.

All parameters needed for the complete calibration algorithm — such as offset, gain, temperature coefficients of offset and gain, and linearization parameters — are determined after assembly. The parameters are stored in internal registers in the EEPROM of the chip.

On Board Diagnostics

When the chip is not powered properly, the JFET transistors of the On Board Diagnostics (OBD) stage are self-conducting. For example, if the GND connection is interrupted, the output is drawn strongly to V_{DD}. The microcontroller can set a limit for valid output signals. In the case of an error, the output voltages will be too close to the V_{DD} or GND potential.

4.2 Transfer Function

The KP123 device is fully calibrated on delivery. The sensor has a linear transfer function between the applied pressure and the output signal:

$$V_{OUT} = V_{DD} \times (a \times P + b)$$

The output is ratiometric.

Gain **a** and Offset **b** are determined during calibration in order to create the required transfer function.

Standard Transfer Function

The following calibration is adjusted with the parameters **a** and **b**:

Table 2 Transfer Function (End Points)

Pressure			Output Voltage @ $V_{DD} = V_{DD;TYP}$		
Symbol	**Values**	**Unit**	**Symbol**	**Values**	**Unit**
$P_{IN,MIN}$	15	kPa	$V_{OUT,MIN}$	0.2	V
$P_{IN,MAX}$	115		$V_{OUT,MAX}$	4.7	

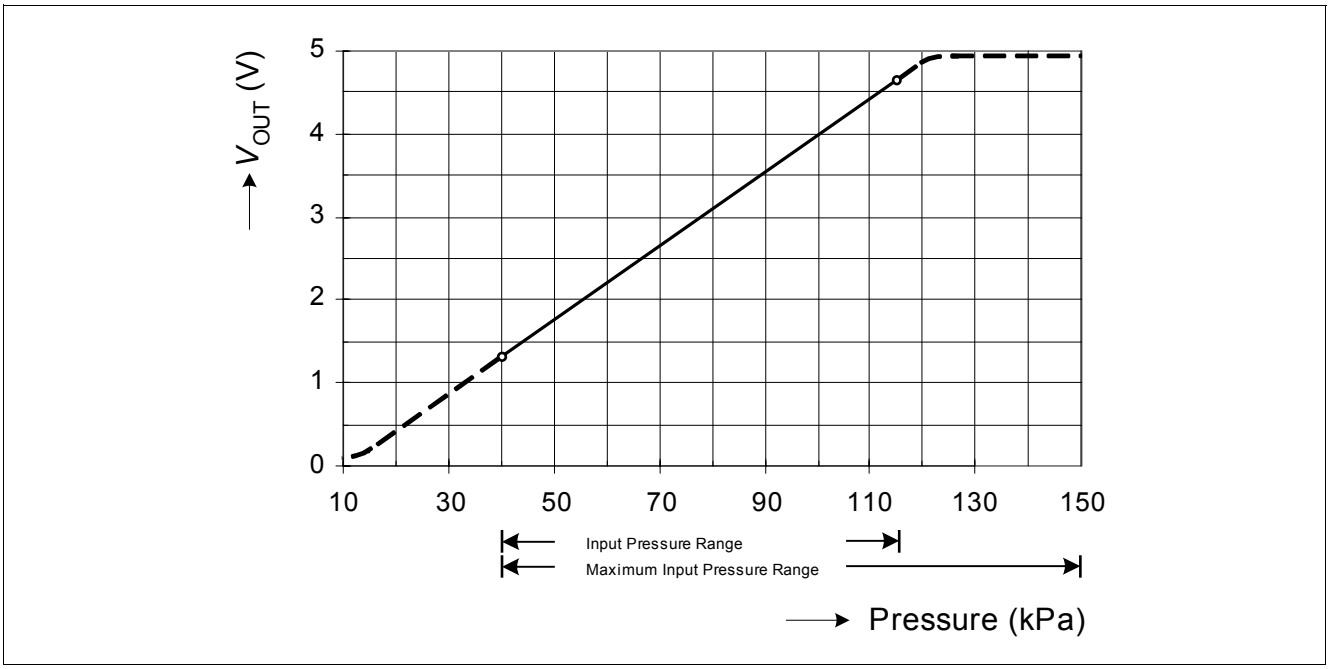

Figure 3 Transfer Function

Note: The application circuitry determines the current driven by the device and thus has an impact on the diagnostic ranges.

5 Electrical Characteristics

5.1 Absolute Maximum Ratings

Table 3 Absolute Maximum Ratings

Parameter	Symbol	Values			Unit	Note / Test Condition
		Min.	Typ.	Max.		
Supply voltage	V_{DD}	– 0.3	–	6.5	V	
		–	–	16.5		1h @ 70°C
		– 6.5 [1]	–	–		for max. 5 minutes
Output voltage	V_{OUT}	– 0.3	–	V_{DD}+ 0.3	V	
Maximum ambient temperature	T_A	– 20		100	°C	
Storage temperature	T_S	– 60		150	°C	
Maximum input pressure range	P_{MAX}	40 5.8	–	600 87	kPa psi	for max. 5 minutes
		40 5.8	–	150 21.75	kPa psi	
Voltage at CLOCK / V_{PROG} Pin	V_{CLK}	–	–	20	V	
Voltage at data pins (DATA IN, DATA OUT)	V_{DATA}	–	–	5.0	V	
ESD robustness [2]	$V_{ESD, HBM}$	–	–	± 2	kV	Analog pins: V_{DD}, Vout, GND
		–	–	± 2	kV	Digital pins: CLOCK / V_{PROG}, DATA OUT, DATA IN

1) Reverse polarity; I_{DD} < 300mA

2) HBM: 1.5kΩ, 100pF; according to EIA/JESD22-A114-B (covers MIL STD 883D)

Attention: Stresses above the max. values listed here may cause permanent damage to the device. Exposure to absolute maximum rating conditions for extended periods may affect device reliability. Maximum ratings are absolute ratings; exceeding only one of these values may cause irreversible damage to the integrated circuit.

5.2 Operating Range

The following operating conditions must not be exceeded in order to ensure correct operation of the device.

All parameters specified in the following sections refer to these operating conditions, unless otherwise noticed.

Table 4 Operating Range

Parameter	Symbol	Values			Unit	Note / Test Condition
		Min.	Typ.	Max.		
Supply voltage	V_{DD}	4.5	5	5.5	V	V_{OUT} is ratiometric to V_{DD}
Output current[1)]	I_{OUT}	– 1	–	1	mA	
Maximum ambient temperature	T_A	– 20		100	°C	
Input pressure range	P_{IN}	40 5.8		115 16.7	kPa psi	

1) Negative values: Current into device (pull-up resistor used).
Positive values: Current out of the device (pull-down resistor used).

5.3 Sensor Characteristics

Table 5 Sensor Characteristics

Parameter	Symbol	Values			Unit	Note / Test Condition
		Min.	Typ.	Max.		
Output Voltage Range	V_{OUT_R}	0.10		4.85	V	More information in chapter "Electrical Details" on Page 13
Sensitivity	S	–	45	–	mV/ kPa	
Supply current	I_{DD}	–	8	10	mA	1)
Overall Accuracy Error	Err	–	± 1.5	–	%	FSS (Full Scale Span) 2)
Ratiometric Error	E_{RAT}	–25	–	25	mV	3)
Output referred noise	V_{NOISE}	–	–	2.5	mV_{RMS}	@ f > 1kHz 4))
		–	–	1.8		@ f < 1kHz
Response time 5)	t_R	–	1.8	–	ms	10% to 90% of the final output value
Stabilization time 5)	t_S	–	–	10	ms	For full accuracy
Power up time 5)	t_{UP}	–	–	5	ms	90% of the final output value
Broken wire: diagnosis response time 6)	t_{OBD}	–	–	1	ms	
OBD Transistor On Resistance	R_{DSON}	–	–	160	Ω	V_{OUT} to V_{DD} or V_{OUT} to GND, @ 25°C
Junction temperature7)	T_j	– 10.2		109.8	°C	
Thermal resistance	$R_{thj\text{-}amb}$		245		K/W	

1) A peak supply current of up to 22 mA is possible during power up.
2) More details in chapter "Overall Accuracy" on Page 16
3) More details in "Supply Voltage Influence (Ratiometric Error)" on Page 15
4) 200 measurements in sequence, bandwidth limited to 40kHz
5) More details in "Timings" on Page 14
6) In the event of a broken wire (broken V_{DD} line or broken GND line), the output changes to certain voltage levels within the broken wire response time.
7) $T_{junction} = T_{ambient} + \Delta T_{c,j}$ (in steady-state condition, typical operation conditions)

5.4 Electrical Details

5.4.1 Output Voltage versus Load

The output voltage limits depend on:

- the value of the external load resistor
- the connection mode (pull-up or pull-down)

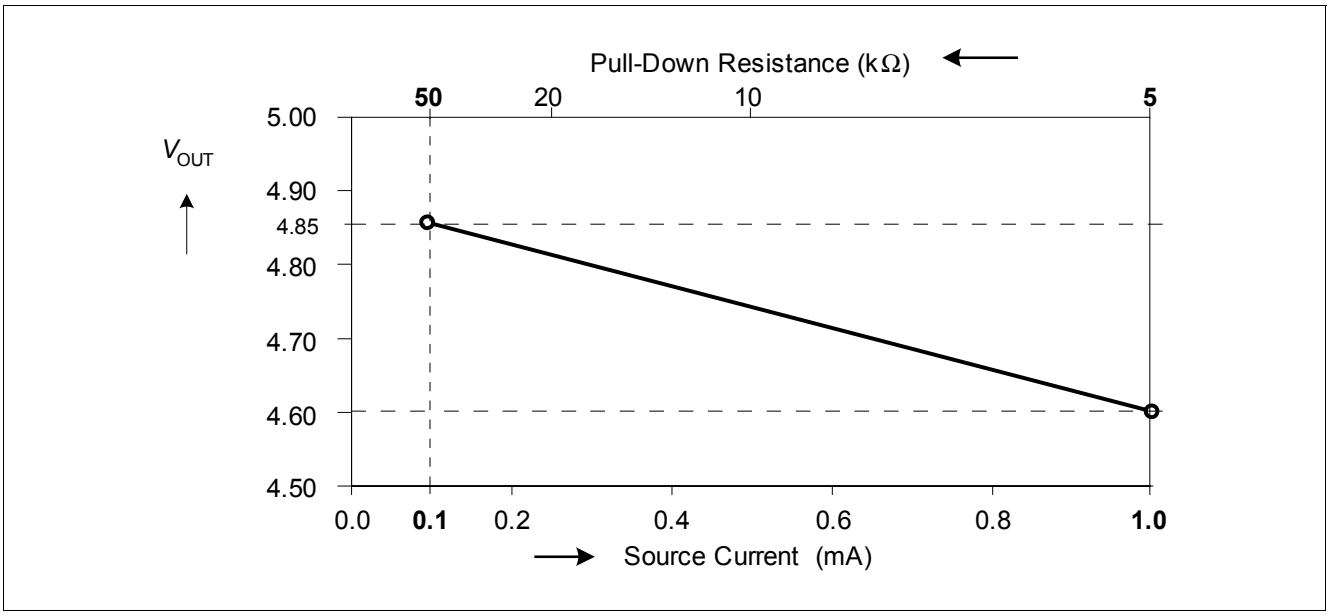

Figure 4 Maximum Output Voltage Limit at Maximum Rated Pressure with Pull-Down Load

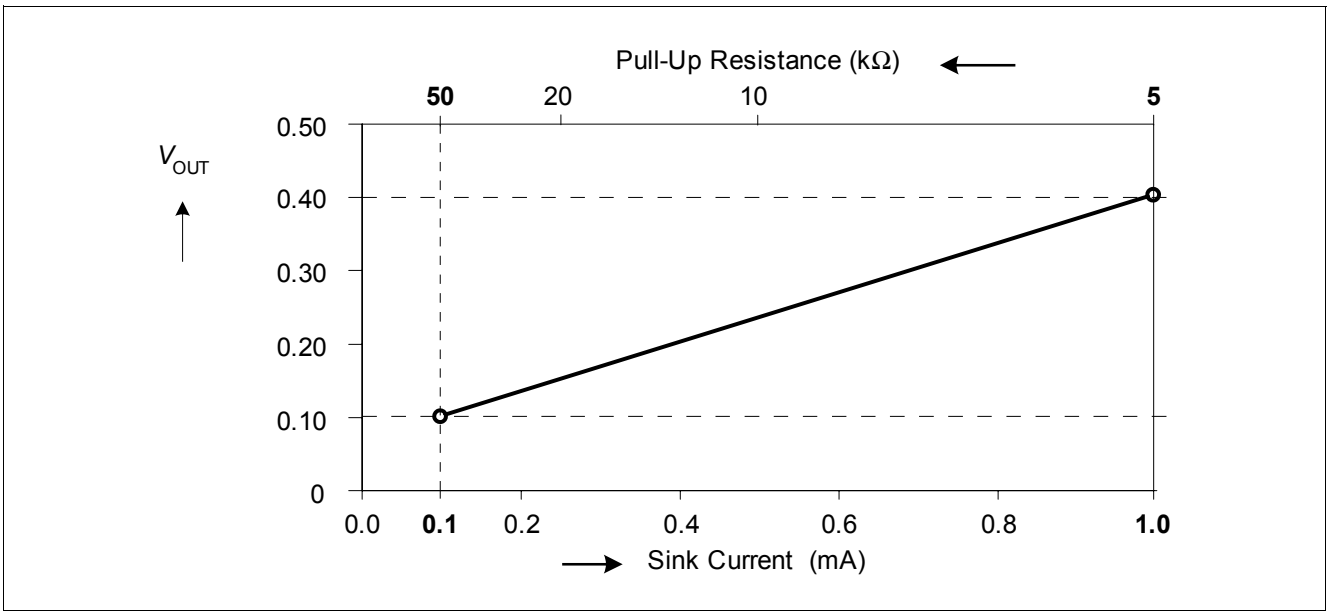

Figure 5 Minimum Output Voltage Limit at Minimum Rated Pressure with Pull-Up Load

Note: The values in the diagrams are valid for the entire specified temperature range.

5.4.2 Timings

Power-up Time

The power-on time t_{UP} is defined as the maximum time between the supply voltage reaching its operating range and the output voltage reaching 90% of its final value.

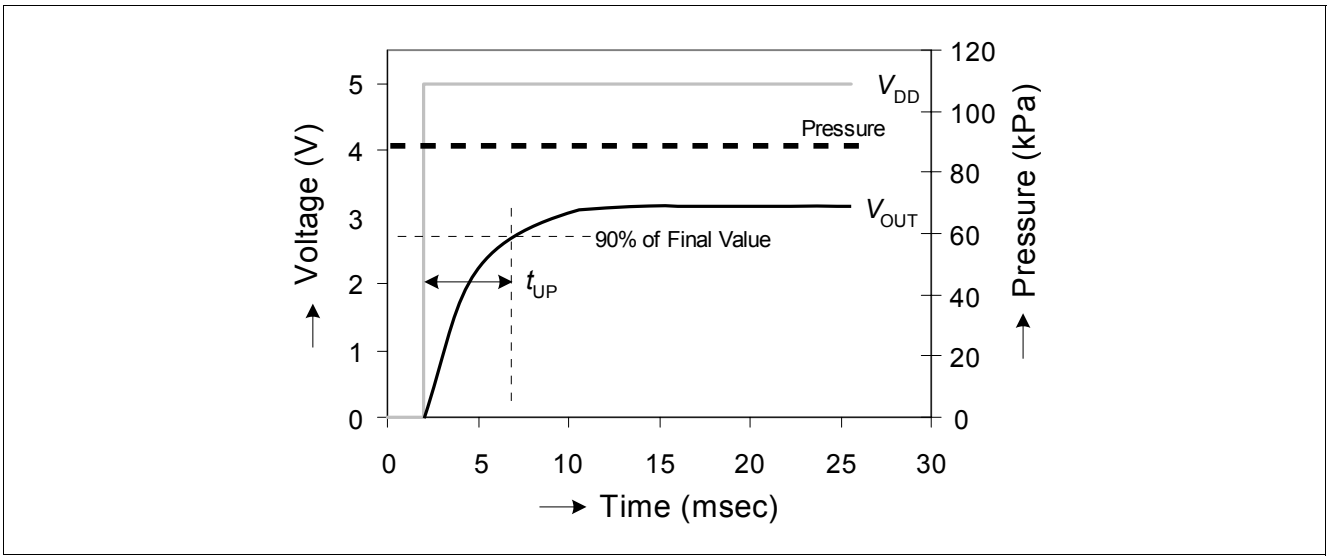

Figure 6 Power-up Time

Response Time and Stabilization Time

The Response Time t_R is defined as the time for the incremental output change to go from 10% to 90% of its final value after a specified pressure step.

The Stabilization Time t_S is defined as the time required for the output voltage to meet the specified accuracy after the pressure has been stabilized.

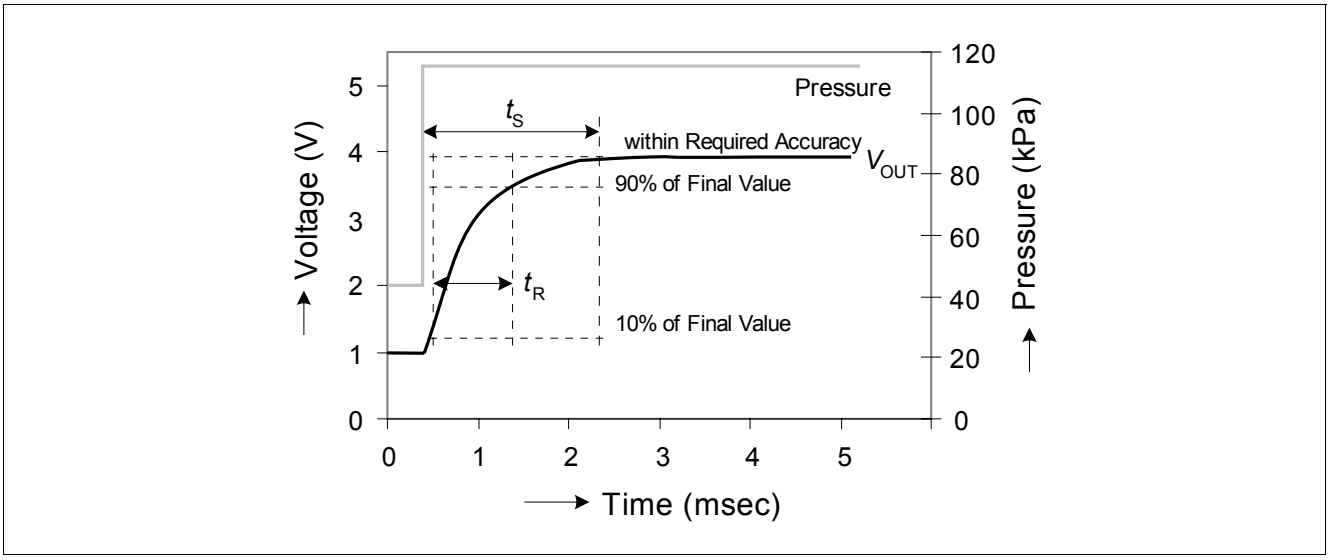

Figure 7 Response Time and Stabilization Time

6 Accuracy

The accuracy of the KP123 sensor is influenced by the supply voltage (ratiometric error) and by pressure, temperature and aging. The specified value represents the theoretical value, when the actual pressure is multiplied with the transfer function, see **Figure 3**. The error equals the deviation between the measured output voltage value and the specified output voltage value.

6.1 Supply Voltage Influence (Ratiometric Error)

Definition

Ideally, the sensor is ratiometric – the output (V_{OUT}) scales by the same ratio that V_{DD} increases or decreases. The ratiometric error is defined as the difference between the ratio that V_{DD} changed and the ratio that V_{OUT} changed, expressed as a percentage:

$$E_{RAT}(\%) = \frac{V_{OUT}(@V_{DD}) - V_{OUT}(@5V) \times \frac{V_{DD}}{5V}}{5V} \times 100\%$$

The output voltage V_{OUT} is ratiometric to V_{DD}, within the range provided in **Table 2**.
V_{DD} must be within the operating range specified in **Table 4**.

Table 6 Ratiometric Error

Supply Voltage (V)	Max. Ratiometric Error (% of $V_{DD,TYP}$)
$V_{DD,MIN}$	± 0.5
$V_{DD,TYP}$	0
$V_{DD,MAX}$	± 0.5

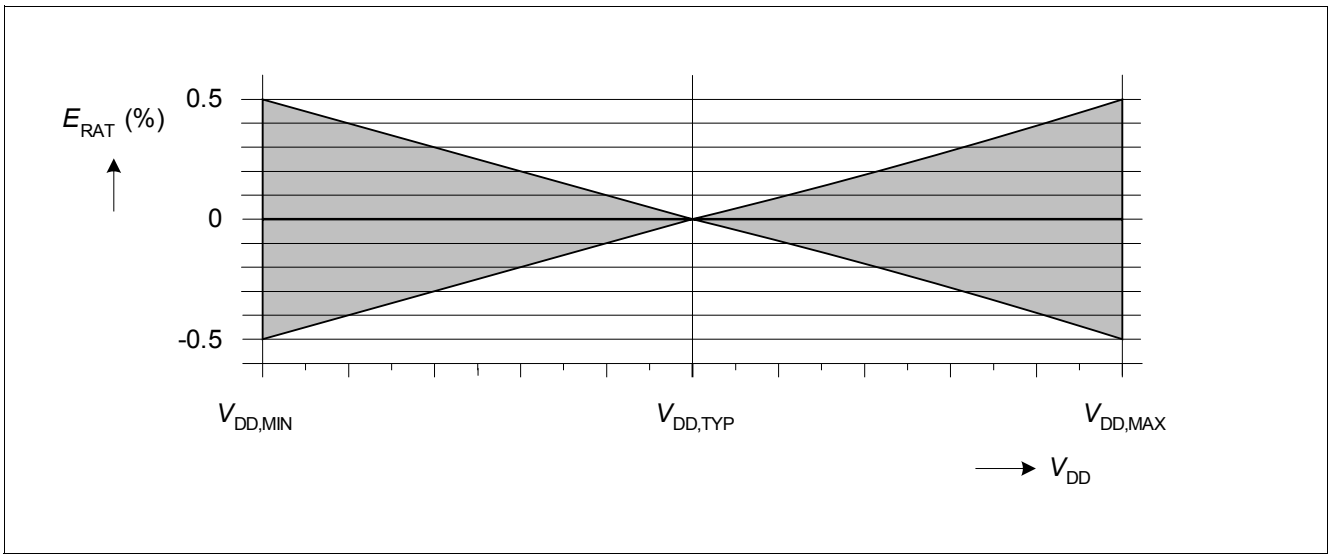

Figure 8 Ratiometric Error

6.2 Overall Accuracy

Overall accuracy covers the entire pressure and temperature range from all sources of error including the following:

- **Pressure**:
  Output deviation from target transfer function over the specified pressure range.
- **Temperature**:
  Output deviation over the temperature range.
- **Aging**
  All drifting parameters during operating time.

Note: Ratiometric signal error is not included in the overall accuracy. For error measurements, the supply voltage must have the nominal value ($V_{DD} = V_{DD,TYP}$).

The error band is determined by three continuous lines through four relevant break points:

Table 7 Accuracy

Temperature Point (°C)	Typical Error (kPa)	Error Multiplier
– 20	± 4.5	3
0	± 1.5	1
85	± 1.5	1
100	± 2.625	1.75

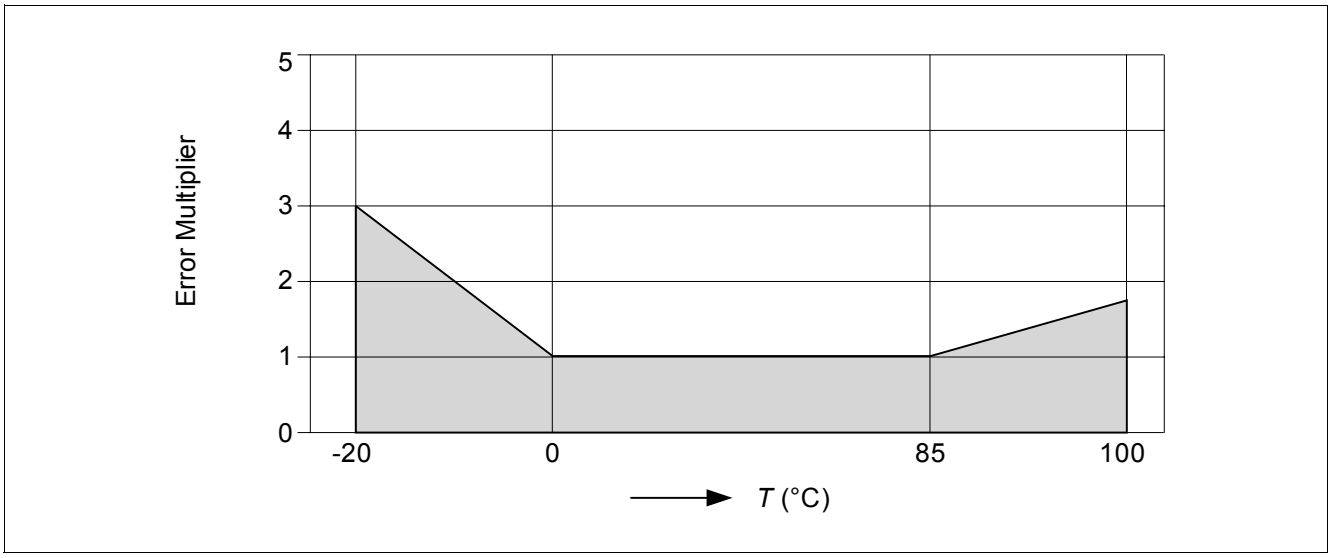

Figure 9 Error Multiplier over Temperature

7 Application Circuit

It is recommended to protect the KP123 pressure sensor IC against overload voltage and electro-magnetic interference (as shown in **Figure 10**).

The output circuitry acts as a low-pass decoupling filter between the sensor IC output and the A/D input of the microcontroller.

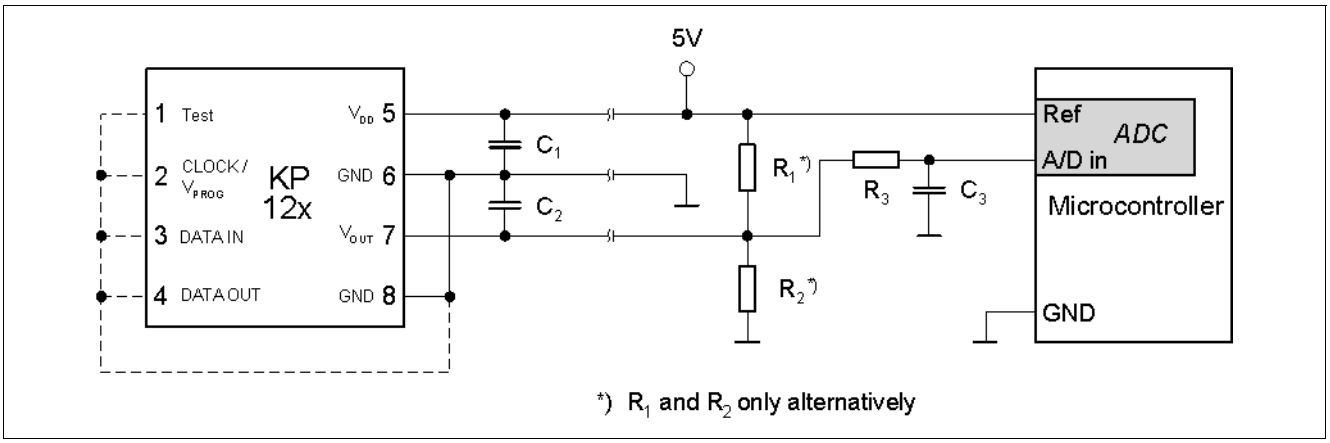

Figure 10 Application Circuitry for Evaluation

Note: It is recommended to leave digital PINs CLOCK/V_{PROG}, DATA IN and DATA OUT floating. If these PINs are grounded, it is recommended to connect both GND PINs.

Table 8 Component Values

Component	Symbol	Values			Unit	Note
		Min.	Typ.	Max.		
Pull-Up Resistor	R_1	5	59	100	kΩ	Only 1 resistor allowed
Pull-Down Resistor	R_2	5	59	100	kΩ	
Low Pass Resistor	R_3	3.9	22	100	kΩ	
Supply Blocking Capacitor	C_1	10	100	100	nF	
Output Blocking Capacitor	C_2	0	100	100	nF	
Low Pass Capacitor	C_3	10	100	100	nF	

Note: The value of load resistor R_1 or R_2 determines the current driven by the device.

8 Package

As well as using “green” materials, the P**G**-DSOF-8-12 package is optimized regarding mechanical stress influences. The package fulfills the solder conditions for lead-free board assembly.

In the application it is recommended to ensure that the same pressure is applied to the whole package.

The KP123 is supplied with a removable plastic cap (refer to **Figure 12**). The flat surface of this cap on top of the package allows handling with standard pick-and-place tools.

After soldering the device to the printed circuit board (PCB), the cap on the PG-DSOF-8-12 may be removed. When removing the protective cap, care should be taken to avoid damage to the device.

In some applications, such as for barometric measurements, it may be appropriate to leave the protective cap on the package after the soldering process. Damage to the gel is prevented. The four splits in the cap side allow a sufficient pressure coupling.

9 Package Outlines

9.1 Package Dimensions

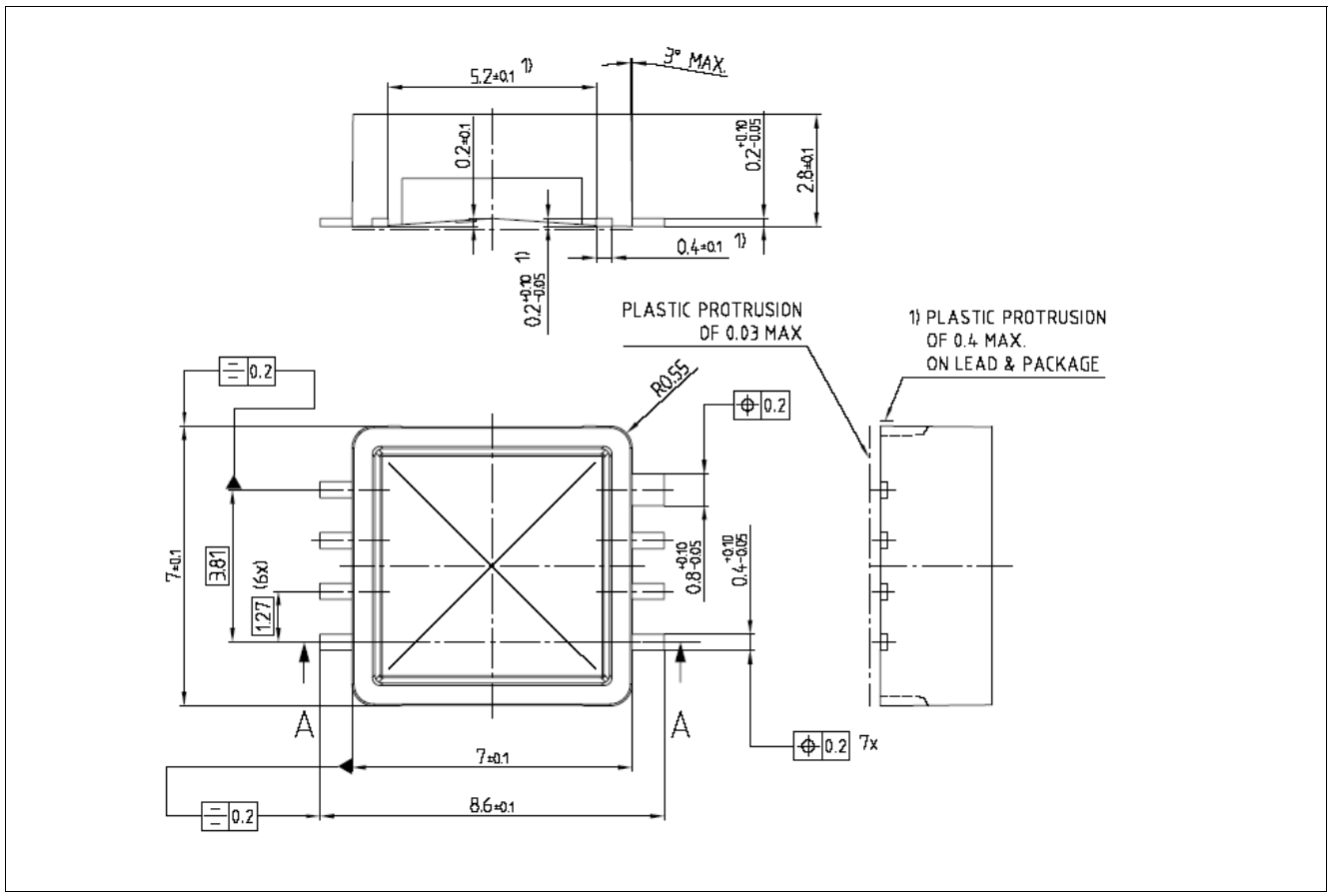

Figure 11 Package

9.2 Cap dimensions

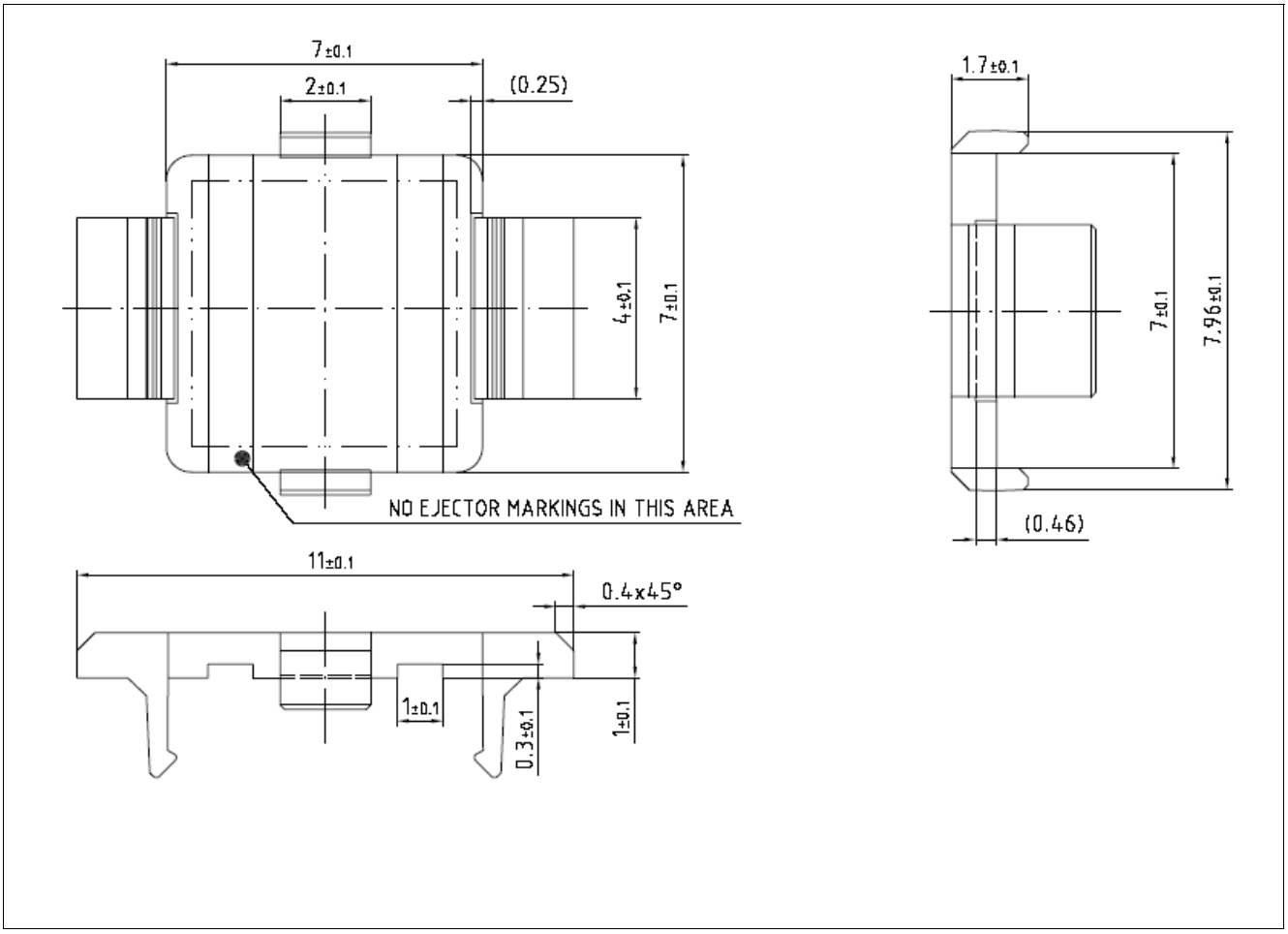

Figure 12 Cap Dimensions

9.3 Footprint

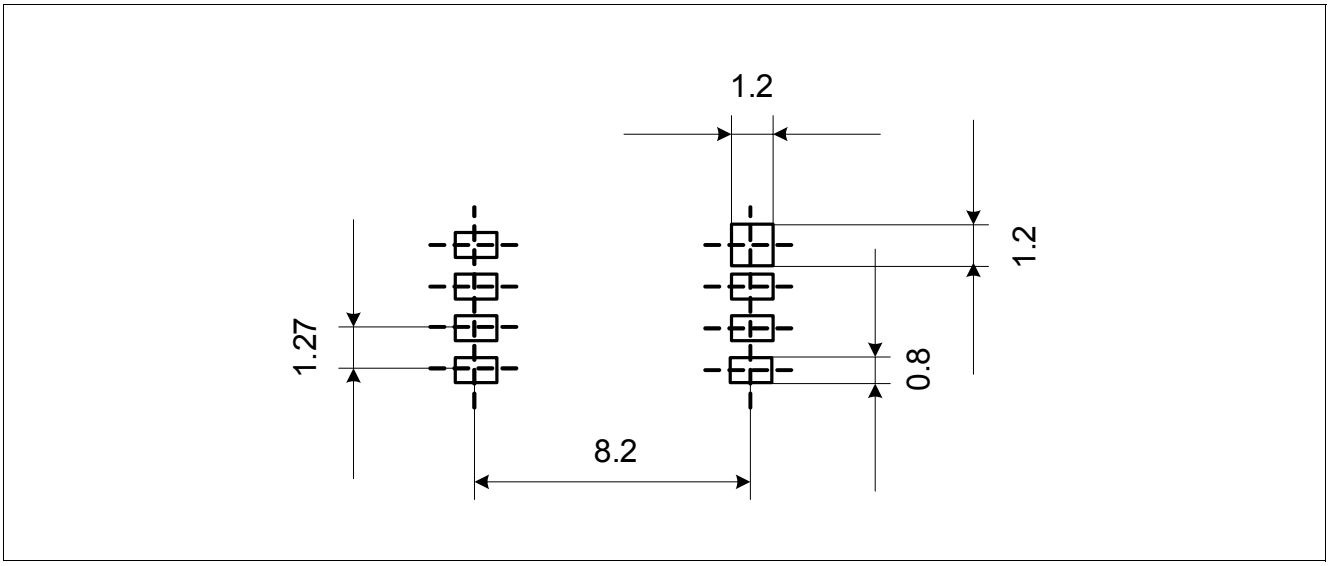

Figure 13 Footprint

10 EMC Requirements

10.1 EM Immunity by Direct Power Injection

The KP123 test is compliant to EMC requirements for Direct Power Injection (DPI) described in

- ISO 11452-7 11-95
- IEC 62132-3 01-00.

10.2 EM Immunity by Electrical Fast Transients

The KP123 test is compliant to EMC requirements for Electrical Fast Transients (EFT) according to the hardware set up shown in **Figure 14**, which is based on

- ISO 7637-1 08-00
- ISO/CD 7637-2 02-99
- ISO 7637-3 11-95

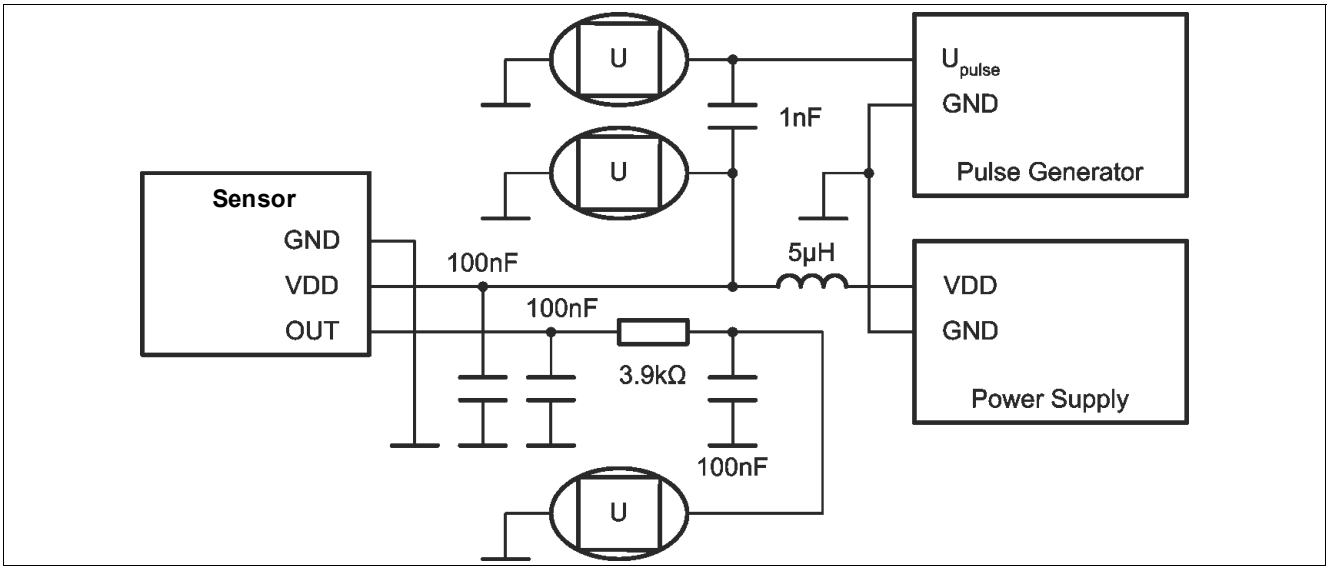

Figure 14 Hardware Set Up for Electrical Fast Transients

11 Identification Code

The identification code is provided in a machine-readable format. The date and sales code are provided in human-readable format.

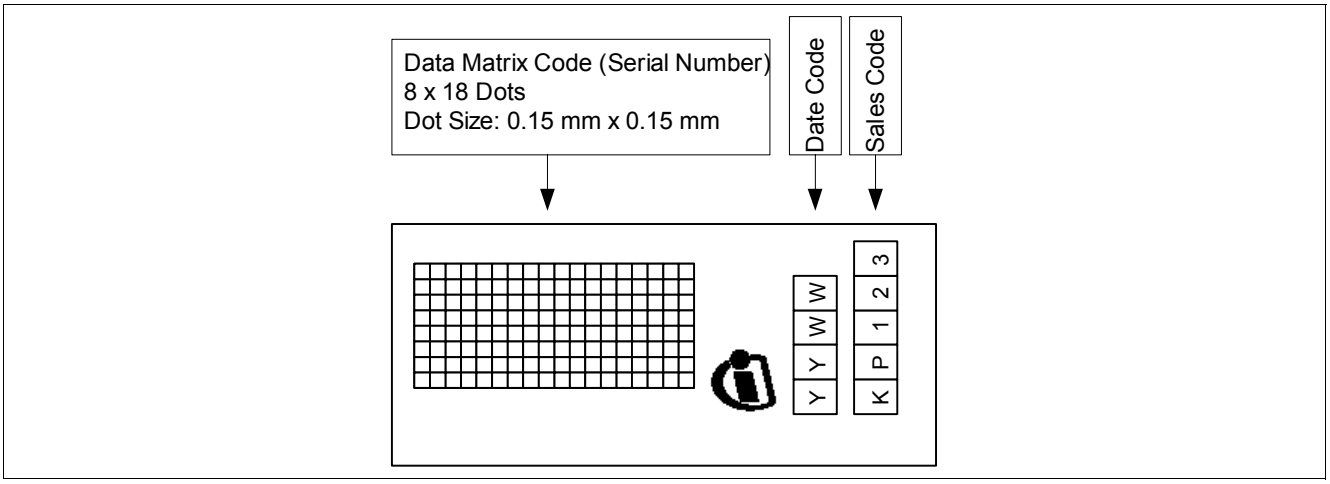

Figure 15 Sensor Identification Code

The marking for the KP123 is on the same side of the package as pin 8.

Date code definition:

WW: work week (1…53)

YY: year (06…99)

Data Matrix Code: 8 x 18 Dots, Dot Size: 0.15 mm x 0.15 mm

www.infineon.com

Published by Infineon Technologies AG