## Final Control Elements

## VALVE POSITIONER

(for 24 V AC motor)

Functions & Features

- Solid-state valve positioner
- Direct drive of 24 V AC motor
- Split control
- Direct or reverse action
- Output circuit designed with no mechanical contact ensures long lasting reliability
- Feedback potentiometer 100 Ω – 10 kΩ

Typical Applications

- Proportional position control for electric valves or dampers in air conditioning systems

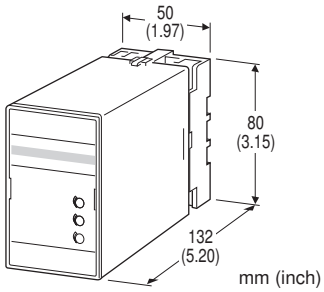


## MODEL: KMP–[1]–[2][3]

## ORDERING INFORMATION

· Code number: KMP-[1]-[2][3]

Specify a code from below for each of [1] through [3].
(e.g. KMP-1-B/Q)

- Specify the specification for option code /Q
(e.g. /C01/S01)

## [1] I/O CHARACTERISTICS

**Current**

1: 4 – 20 mA DC (Input resistance 62.5 Ω)
2: 4 – 20 mA DC (Input resistance 62.5 Ω)
3: 4 – 12 mA DC (Input resistance 62.5 Ω)
4: 12 – 20 mA DC (Input resistance 62.5 Ω)

**Voltage**

V1: 0 – 10 V DC (Input resistance 10 kΩ min.)

See the graph on the General Specification section.

## FEEDBACK RESISTANCE

Total resistance 100 Ω – 10 kΩ

## OUTPUT

24 V AC switch

## [2] POWER INPUT

**AC Power**

B: 100 V AC
C: 110 V AC
D: 115 V AC
F: 120 V AC
G: 200 V AC
H: 220 V AC
J: 240 V AC

## [3] OPTIONS

blank: none
/Q: With options (specify the specification)

**SPECIFICATIONS OF OPTION: Q (multiple selections)**

**COATING (For the detail, refer to M-System's web site.)**

/C01: Silicone coating
/C02: Polyurethane coating
/C03: Rubber coating

**TERMINAL SCREW MATERIAL**

/S01: Stainless steel

## GENERAL SPECIFICATIONS

Construction: Plug-in
Connection: M3.5 screw terminals
Screw terminal: Chromated steel (standard) or stainless steel
Housing material: Flame-resistant resin (black)
Sensitivity adjustment: 0 – 20 % of total feedback resistance at 0 % side; 70 – 100 % at 100 % side (front)
Deadband adjustment: 2 – 20 % (front)
Isolation: Input to output to power

- **Setpoint Signal and position characteristics**

1, 2, 3, 4 and V1 in the graph are I/O characteristics model suffix codes.

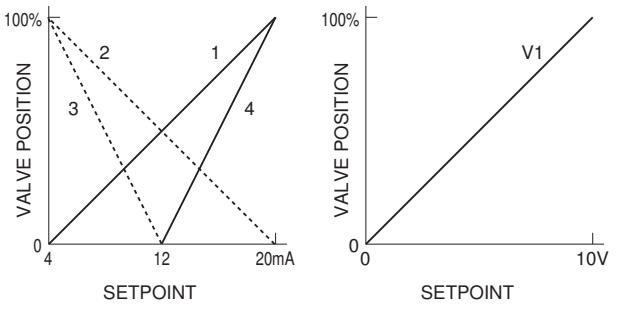

## INPUT SPECIFICATIONS

■ **Setpoint Signal**

**Input resistance**:Input resistor incorporated (current input)

■ **Feedback Potentiometer**: 100 Ω – 10 kΩ

**Minimum span**: 50 % of total resistance

**Excitation**: 0.5 V DC

## OUTPUT SPECIFICATIONS

**Rated load**: 24 V AC @ 1 A max.

**Voltage drop**: 6 V @ 1 A

(OFF duration must be longer than ON duration. ON duration at the maximum of 15 minutes.)

•**Output Operation** (terminal No. in parentheses)

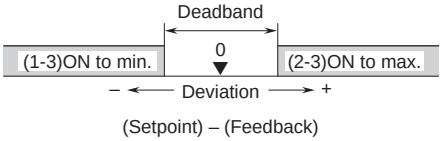


## INSTALLATION

**Power input**

•**AC**: Operational voltage range: rating ±10 %, 50/60 ±2 Hz, approx. ≤ 4 VA

**Operating temperature**: -5 to +55°C (23 to 131°F)

**Operating humidity**: 30 to 90 %RH (non-condensing)

**Mounting**: Surface or DIN rail

**Weight**: 300 g (0.66 lb)

## PERFORMANCE in percentage of span

**Accuracy**: ±0.3 %

**Insulation resistance**: ≥ 100 MΩ with 500 V DC

**Dielectric strength**: 1000 V AC @1 minute
(input to output to power)
2000 V AC @1 minute
(input or output or power to ground)

## EXTERNAL VIEW

■ **KMP–1, 2, V1**

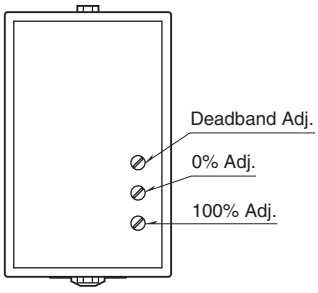


■ **KMP–3, 4**

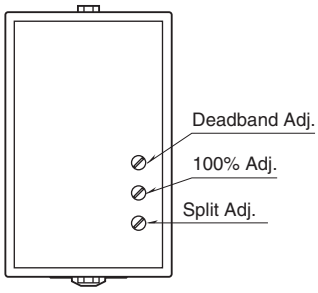

## EXTERNAL DIMENSIONS & TERMINAL ASSIGNMENTS unit: mm (inch)

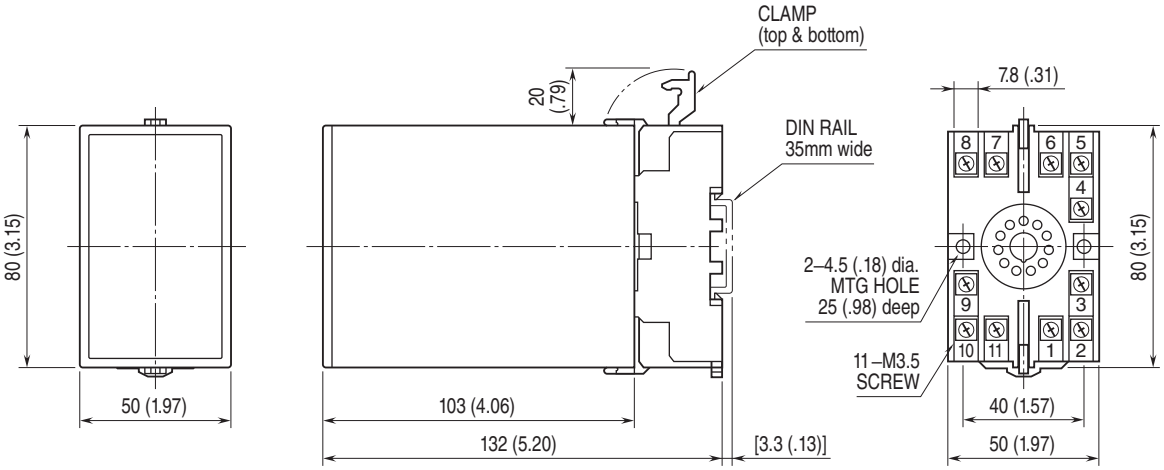


• When mounting, no extra space is needed between units.

## SCHEMATIC CIRCUITRY & CONNECTION DIAGRAM

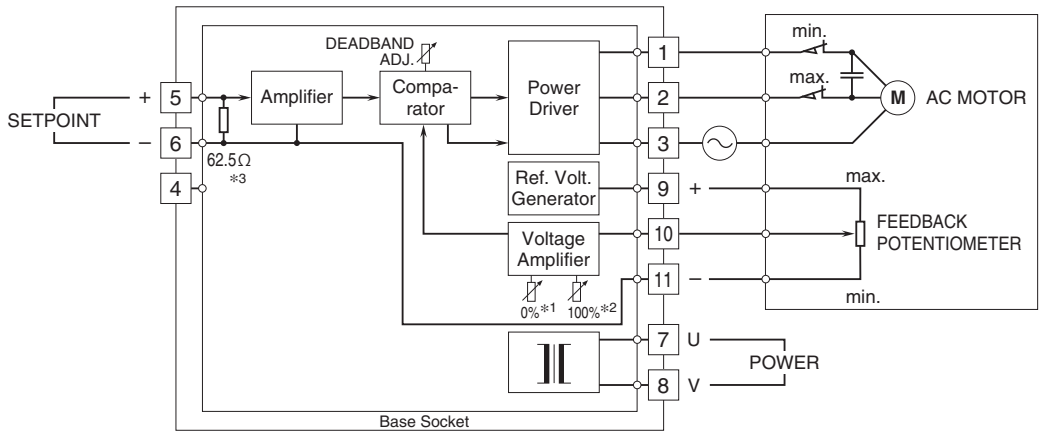


*1. 100% side with KMP-3 or KMP-4.
*2. Split adj. with KMP-3 or KMP-4.
*3. Incorporated with KMP-1, 2, 3 or 4

## TERMINOLOGY

**•Split Control**

Control in which two or more output signals are generated according to different functions by one input signal.

[Example] Control of two valves in different actions in order to keep temperature steady: one for cold water and another for hot water.

Use a reverse acting Model KMP-2 (-3) for hot water, and a direct acting Model KMP-1 (-4, -V1) for cold water. When setpoint signal increases, the hot water valve is actuated to open, while the cold water valve is actuated to close. When setpoint signal decreases, the two valves move to opposite directions.

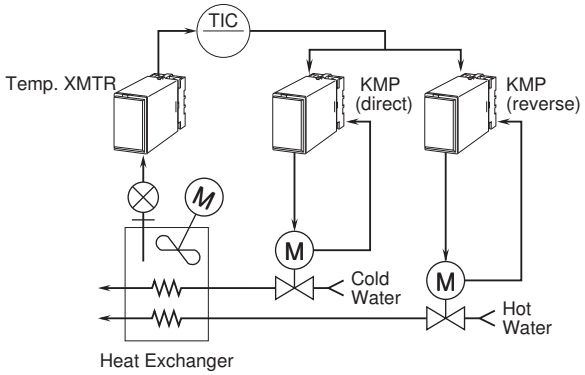


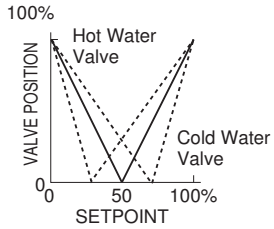


⚠ Specifications are subject to change without notice.