

KMA221

Programmable angle sensor

Rev. 1 — 16 July 2013 Product data sheet

1. Product profile

1.1 General description

The KMA221 is a magnetic angle sensor module. The MagnetoResistive (MR) sensor bridges, the mixed signal Integrated Circuit (IC) and the required capacitors are integrated into a single package.

This angular measurement module KMA221 is pre-programmed, pre-calibrated and therefore, ready to use.

The KMA221 allows user-specific adjustments of angular range, zero angle and clamping voltages. The settings are stored permanently in a non-volatile memory.

1.2 Features and benefits

- High precision sensor for magnetic angular measurement
- Single package sensor module with integrated filters for improved ElectroMagnetic Compatibility (EMC)
- Automotive qualified in accordance with AEC-Q100 Rev-G
- Programmable user adjustments, including zero angle and angular range
- Fail-safe non-volatile memory with write protection using lock bit
- Independent from magnetic field strength above 35 kA/m
- Ready to use without external components
- High temperature range up to 160 °C
- Analog ratiometric output voltage
- Overvoltage protection up to 16 V
- Programming via One-Wire Interface (OWI)
- User-programmable 32-bit identifier
- Magnet-loss, power-loss and broken bond wire detection
- Factory calibrated

2. Pinning information

Table 1. Pinning

Pin	Symbol	Description	Simplified outline
1	OUT/DATA	analog output or data interface	
2	GND	ground	
3	V_{DD}	supply voltage	
4	n.c.	not connected	

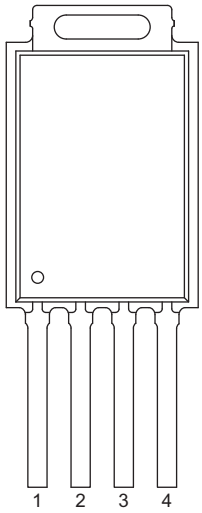

3. Ordering information

Table 2. Ordering information

Type number	Package		
	Name	Description	Version
KMA221	SIL4	plastic, single in-line package	SOT1188-1

All information provided in this document is subject to legal disclaimers.

© NXP B.V. 2013. All rights reserved.

4. Functional diagram

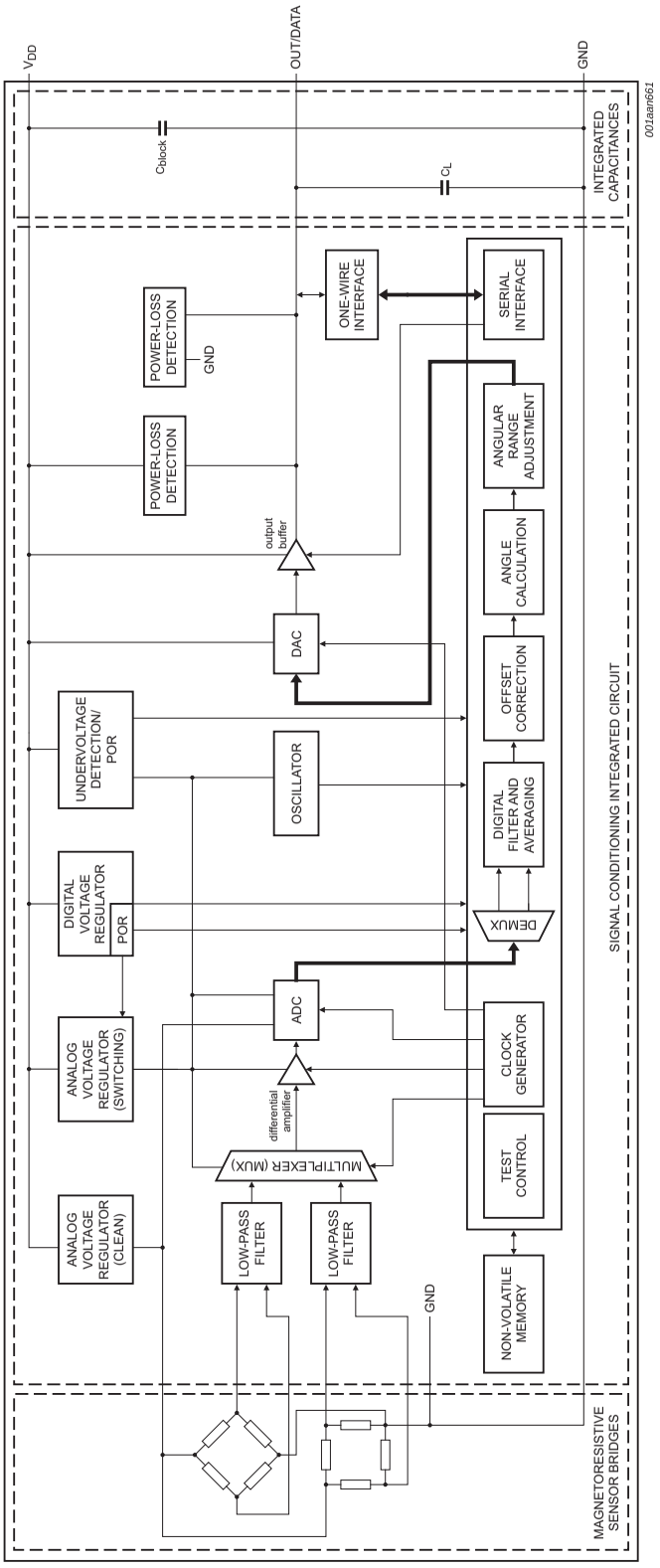

Fig 1. Functional diagram of KMA221

All information provided in this document is subject to legal disclaimers.

© NXP B.V. 2013. All rights reserved.

5. Functional description

The KMA221 amplifies two orthogonal differential signals from MR sensor bridges and converts them into the digital domain. The angle is calculated using the COordinate Rotation DIgital Computer (CORDIC) algorithm. After a digital-to-analog conversion, the analog signal is provided to the output as a linear representation of the angular value. Zero angle, clamping voltages and angular range are programmable. In addition, two 16-bit registers are available for customer purposes, such as sample identification.

The KMA221 comprises a Cyclic Redundancy Check (CRC) and an Error Detection and Correction (EDC). It also has magnet-loss and broken bond wire detection to ensure a fail-safe operation. If either the supply voltage or the ground line of the mixed signal IC is interrupted, a power-loss detection circuit pulls the analog output to the remaining connection.

After multiplexing the two MR Wheatstone bridge signals and their successive amplification, the signal is converted into the digital domain by an Analog-to-Digital Converter (ADC). Further processing is done within an on-chip state machine. This state machine controls offset cancelation, calculation of the mechanical angle using the CORDIC algorithm, as well as zero angle and angular range adjustment. The internal Digital-to-Analog Converter (DAC) and analog output stage are used for the conversion of the angle information into an analog output voltage, which is ratiometric to the supply voltage.

The configuration parameters are stored in a user-programmable non-volatile memory. The OWI (accessible using pin OUT/DATA) is used for accessing the memory. In order to protect the memory content, a lock bit can be set. After locking the non-volatile memory, its content cannot be changed anymore.

5.1 Angular measurement directions

The differential signals of the MR sensor bridges depend only on the direction of the external magnetic field strength H_{ext}, which is applied parallel to the plane of the sensor. In order to obtain a correct output signal, exceed the minimum saturation field strength.

All information provided in this document is subject to legal disclaimers.

© NXP B.V. 2013. All rights reserved.

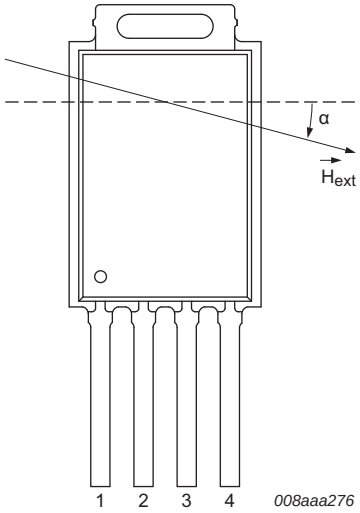

Fig 2. Angular measurement directions

Since the Anisotropic MR (AMR) effect is periodic over 180°, the sensor output is also 180°-periodic. The angle is calculated relative to a freely programmable zero angle. The dashed line indicates the mechanical zero degree position.

6. Analog output

The KMA221 provides one analog output signal on pin OUT/DATA. The measured angle α is converted linearly into a value, which is ratiometric to the supply voltage V_{DD}. Either a positive or a negative slope is provided for this purpose.

Table 3 describes the analog output behavior for a positive slope. For example, if a magnetic field angle, above the programmed maximum angle α_{max} but below the clamp switch angle $\alpha_{sw(CL)}$, is applied to the sensor, the analog output is set to the upper clamping voltage. If the magnetic field angle is larger than the clamp switch angle, the analog output switches from upper to lower clamping voltage. If there is a negative slope, the clamping voltages are changed.

Table 3. Analog output behavior for a positive slope

Magnetic field angle	Analog output
$\alpha_{max} < \alpha < \alpha_{sw(CL)}$	$V_{(CL)u}$
$\alpha_{sw(CL)} < \alpha < \alpha_{ref} + 180°$	$V_{(CL)l}$

The analog output voltage range encodes both angular and diagnostic information. A valid angle value is between the upper and lower clamping voltage. If the analog output is in the diagnostic range, that is below 4 %V_{DD} or above 96 %V_{DD}, an error condition has been detected. The analog output repeats every 180°.

All information provided in this document is subject to legal disclaimers.

© NXP B.V. 2013. All rights reserved.

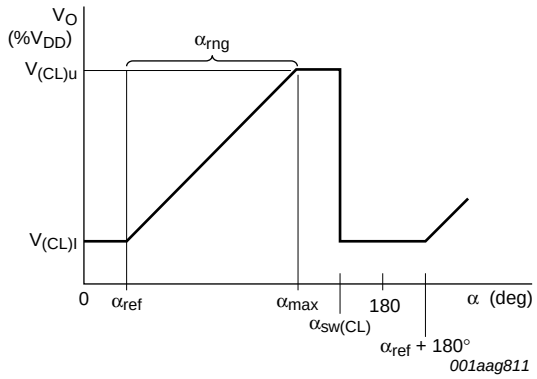

$\alpha_{max} = \alpha_{ref} + \alpha_{rng}$

Fig 3. Characteristic of the analog output

7. Diagnostic features

The KMA221 provides several diagnostic features:

7.1 CRC and EDC supervision

The KMA221 includes a supervision of the programmed data. At power-on, a CRC of the non-volatile memory is performed. Furthermore the memory is protected against bit errors. Every 16-bit data word is saved internally as a 22-bit word for this purpose. The protection logic corrects any single-bit error in a data word, while the sensor continues in normal operation mode. Furthermore the logic detects double-bit error per word and switches the output into diagnostic mode.

7.2 Magnet-loss detection

If the applied magnetic field strength is not sufficient, the KMA221 can raise a diagnostic condition. In order to enter the diagnostic mode, due to magnet-loss, enable the detection first. The device can be programmed into active diagnostic mode, where the output is driven below 4 %V_{DD} or above 96 %V_{DD}.

7.3 Power-loss detection

The power-loss detection circuit enables the detection of an interrupted supply or ground line of the mixed signal IC. If there is a power-loss condition, two internal switches in the sensor are closed, connecting the pin of the analog output to the supply voltage and the ground pins.

All information provided in this document is subject to legal disclaimers.

© NXP B.V. 2013. All rights reserved.

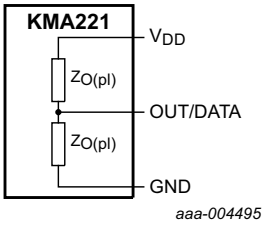

Fig 4. Equivalent output circuit in a power-loss condition

Table 4 describes the power-loss behavior and gives the resulting output voltage depending on the interrupted supply or ground line and the load resistance.

Table 4. Power-loss behavior

Load resistance	Interrupted supply line	Interrupted ground line
$R_{L(ext)} > 5\ k\Omega$	$V_O \leq 4\ \%V_{DD}$	$V_O \geq 96\ \%V_{DD}$

7.4 Broken bond wire detection

The broken bond wire detection circuit enables the detection of an interrupted supply or ground line of the MR sensor bridge. If there is a broken bond wire, the device goes into diagnostic mode and a status bit is set.

7.5 Low supply voltage detection and overvoltage protection

If the supply voltage is below the switch-off threshold voltage, a status bit is set and the device goes into diagnostic mode. If the supply voltage is above the overvoltage switch-on threshold voltage, the device enters diagnostic mode. Table 5 describes the system behavior depending on the voltage range of the supply voltage.

Table 5. System behavior

Supply voltage	State	Description
0 V to ≅ 1.8 V	start-up power	The output buffer drives an active LOW or is powered down. The switches of the power-loss detection circuit are not fully opened and set the output to a level between ground and half the supply voltage.
≅ 1.8 V to V_{POR}	power-on reset	The power-loss charge pump is fully operational and turns the switches of the detection circuit off. The output buffer drives an active LOW and sets the output to the lower diagnostic level. During the reset phase, all circuits are in reset and/or Power-down mode.
V_{POR} to $V_{th(on)}$ or $V_{th(off)}$	initialization	The digital core and the oscillator are active. After reset, the content of the non-volatile memory is copied into the shadow registers. The output buffer drives an active LOW and sets the output to the lower diagnostic level.
$V_{th(on)}$ or $V_{th(off)}$ to minimum V_{DD}	functional operation	All analog circuits are active and the measured angle is available at the analog output. Not all parameters are within the specified limits.

All information provided in this document is subject to legal disclaimers.

© NXP B.V. 2013. All rights reserved.

Table 5. System behavior *...continued*

Supply voltage	State	Description
Minimum V_{DD} to maximum V_{DD}	normal operation	All analog circuits are active and the measured angle is available at the analog output. All parameters are within the specified limits.
Maximum V_{DD} to $V_{th(ov)}$	functional operation	All analog circuits are active and the measured angle is available at the analog output. Not all parameters are within the specified limits.
$V_{th(ov)}$ to 16 V	overvoltage	The digital core and the oscillator are active but all other circuits are in Power-down mode. The output is set to the lower diagnostic level.

Table 6 describes the diagnostic behavior and the resulting output voltage depending on the error case. Furthermore the duration and termination condition to enter and leave the diagnostic mode are given, respectively.

Table 6. Diagnostic behavior

Diagnostic condition	Duration	Analog output	Termination condition
Low voltage	1 µs < t < 10 µs	≤ 4 %V_{DD}	functional or normal operation
Overvoltage	1 µs < t < 10 µs	≤ 4 %V_{DD}	functional or normal operation
Checksum error	n/a	≤ 4 %V_{DD} or ≥ 96 %V_{DD}[2]	power-on reset[1]
Double-bit error	n/a	≤ 4 %V_{DD} or ≥ 96 %V_{DD}[2]	power-on reset[1]
Magnet-loss	0.5 ms < t < 6 ms	≤ 4 %V_{DD} or ≥ 96 %V_{DD}[2]	magnet present[1]
Power-loss	≤ 2 ms	≤ 4 %V_{DD} or ≥ 96 %V_{DD}[2]	power-on reset
Broken bond wire	0.2 ms < t < 1 ms	≤ 4 %V_{DD} or ≥ 96 %V_{DD}[2]	power-on reset[1]

[1] Status bit stays set in command register until power-on reset.

[2] Depending on the diagnostic level setting.

8. Limiting values

Table 7. Limiting values

In accordance with the Absolute Maximum Rating System (IEC 60134).

Symbol	Parameter	Conditions	Min	Max	Unit
V_{DD}	supply voltage		–0.3	+16	V
V_O	output voltage		–0.3	+16	V
$V_{O(ov)}$	overvoltage output voltage	T_{amb} < 140 °C at t < 1 h [1]	$V_{th(ov)}$	16	V
I_r	reverse current	T_{amb} < 70 °C	-	150	mA
T_{amb}	ambient temperature		–40	+160	°C
$T_{amb(pr)}$	programming ambient temperature		10	70	°C
T_{stg}	storage temperature		–40	+125	°C
Non-volatile memory					
$t_{ret(D)}$	data retention time	T_{amb} = 50 °C	17	-	year
$N_{endu(W_ER)}$	write or erase endurance	$T_{amb(pr)}$ = 70 °C	100	-	cycle

[1] Overvoltage on analog output and supply within the specified operating voltage range.

All information provided in this document is subject to legal disclaimers.

© NXP B.V. 2013. All rights reserved.

9. Recommended operating conditions

Table 8. Operating conditions

In a homogenous magnetic field.

Symbol	Parameter	Conditions	Min	Typ	Max	Unit
V_{DD}	supply voltage	[1]	4.5	5.0	5.5	V
T_{amb}	ambient temperature		−40	-	+160	°C
$T_{amb(pr)}$	programming ambient temperature		10	-	70	°C
$C_{L(ext)}$	external load capacitance	[1][2]	0	-	22	nF
		[2][3]	0	-	6.8	nF
$R_{L(ext)}$	external load resistance	[4]	5	-	∞	kΩ
H_{ext}	external magnetic field strength		35	-	-	kA/m

[1] Normal operation mode.

[2] Between ground and analog output.

[3] Command mode.

[4] Power-loss detection is only possible with a load resistance within the specified range connected to the supply or ground line.

10. Thermal characteristics

Table 9. Thermal characteristics

Symbol	Parameter	Conditions	Typ	Unit
$R_{th(j-a)}$	thermal resistance from junction to ambient		100	K/W

11. Characteristics

Table 10. Mechanical characteristics

Symbol	Parameter	Conditions	Min	Typ	Max	Unit
F_{lead}	mechanical force to the leads	T_{amb} = 25 °C	-	-	10	N
F_{fin}	mechanical force to the fin holder	T_{amb} = 25 °C	-	-	15	N

Table 11. Supply current

Characteristics are valid for the operating conditions, as specified in Section 9.

Symbol	Parameter	Conditions	Min	Typ	Max	Unit
I_{DD}	supply current	[1][2]	5	-	10.5	mA
		[3][4]	-	-	13	mA
$I_{off(ov)}$	overvoltage switch-off current	[5]	-	-	6	mA

[1] Normal operation and diagnostic mode excluding overvoltage and undervoltage within the specified operating supply voltage range.

[2] Without load current at the analog output.

[3] Normal operation and diagnostic mode over full voltage range up to limiting supply voltage at steady state.

[4] With minimum load resistance at the analog output.

[5] Diagnostic mode for a supply voltage above the overvoltage threshold voltage up to the limiting supply voltage.

All information provided in this document is subject to legal disclaimers.

© NXP B.V. 2013. All rights reserved.

Table 12. Power-on reset

Characteristics are valid for the operating conditions, as specified in Section 9.

Symbol	Parameter	Conditions	Min	Typ	Max	Unit
$V_{th(on)}$	switch-on threshold voltage	analog output switches on, if $V_{DD} > V_{th(on)}$	-	4.30	4.45	V
$V_{th(off)}$	switch-off threshold voltage	analog output switches off, if $V_{DD} < V_{th(off)}$	3.90	4.10	-	V
V_{hys}	hysteresis voltage	$V_{hys} = V_{th(on)} - V_{th(off)}$	0.1	0.2	-	V
V_{POR}	power-on reset voltage	IC is initialized	-	3.3	3.6	V
$V_{th(ov)}$	overvoltage threshold voltage	analog output switches off, if $V_{DD} > V_{th(ov)}$	6.5	7.5	8.0	V
$V_{hys(ov)}$	overvoltage hysteresis voltage		0.1	0.3	-	V

Table 13. Module performance

Characteristics are valid for the operating conditions, as specified in Section 9.

Symbol	Parameter	Conditions		Min	Typ	Max	Unit
α_{res}	angle resolution		[1]	-	-	0.04	deg
α_{max}	maximum angle	programmable angular range for $V_{(CL)u} - V_{(CL)l} \geq 80\ \%V_{DD}$	[2]	5	-	180	deg
α_{ref}	reference angle	programmable zero angle	[2]	0	-	180	deg
$V_{O(nom)}$	nominal output voltage	at full supply operating range		5	-	95	$\%V_{DD}$
$V_{O(udr)}$	upper diagnostic range output voltage		[3][4][5]	96	-	100	$\%V_{DD}$
$V_{O(ldr)}$	lower diagnostic range output voltage		[3][4][5]	0	-	4	$\%V_{DD}$
$V_{(CL)u}$	upper clamping voltage		[4][5][6]	40	-	95	$\%V_{DD}$
$V_{(CL)l}$	lower clamping voltage		[4][5][6]	5	-	30.5	$\%V_{DD}$
$\Delta V_{(CL)}$	clamping voltage variation	deviation from programmed value	[4][5]	−0.3	-	+0.3	$\%V_{DD}$
$V_{n(o)(RMS)}$	RMS output noise voltage	equivalent power noise	[1][4]	-	0.4	2.5	mV
$\Delta\phi_{lin}$	linearity error	temperature range −40 °C to +160 °C	[4][7]	−1.2	-	+1.2	deg
		temperature range −40 °C to +140 °C	[4][7]	−1	-	+1	deg
$\Delta\phi_{temp}$	temperature drift error	temperature range −40 °C to +160 °C	[1][4][7][8]	-	-	0.8	deg
		temperature range −40 °C to +140 °C	[1][4][7][8]	-	-	0.65	deg
$\Delta\phi_{temp\|RT}$	temperature drift error at room temperature	temperature range −40 °C to +160 °C	[7][8][9]	-	-	0.65	deg
		temperature range −40 °C to +140 °C	[7][8][9]	-	-	0.55	deg
$\Delta\phi_{hys}$	hysteresis error	referred to input	[4][7]	-	-	0.09	deg
$\Delta\phi_{\mu lin}$	microlinearity error	referred to input	[4][7]	−0.1	-	+0.1	deg

All information provided in this document is subject to legal disclaimers.

© NXP B.V. 2013. All rights reserved.

Table 13. Module performance *...continued*

Characteristics are valid for the operating conditions, as specified in Section 9.

Symbol	Parameter	Conditions		Min	Typ	Max	Unit
$\Delta\phi_{ang}$	angular error	temperature range −40 °C to +160 °C	[4][7] [10]	−1.35	-	+1.35	deg
		temperature range −40 °C to +140 °C	[4][7] [10]	−1.1	-	+1.1	deg
m_{ang}	slope of angular error		[4][7] [10]	-	-	0.04	deg/deg
$Z_{O(pl)}$	power-loss output impedance	impedance to remaining supply line in case of lost supply voltage or lost ground		-	-	210	Ω

[1] At a nominal output voltage between 5 %V_{DD} and 95 %V_{DD} and a maximum angle of α_{max} = 180°.

[2] In steps of resolution < 0.022°.

[3] Activation is dependent on the programmed diagnostic mode.

[4] At a low-pass filtered analog output with a cut-off frequency of 0.7 kHz.

[5] Settling to these values is limited by 0.7 kHz low-pass filtering of analog output.

[6] In steps of 0.02 %V_{DD}.

[7] Definition of errors is given in Section 12.

[8] Based on a 3σ standard deviation.

[9] Room temperature is given for an ambient temperature of 25 °C.

[10] Graph of angular error is shown in Figure 5.

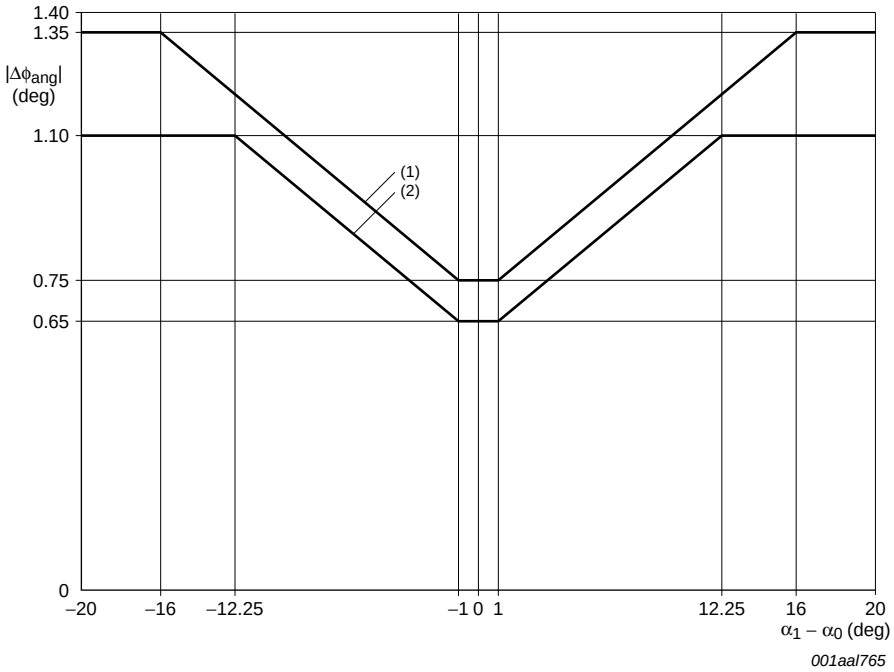

(1) −40 °C to +160 °C

(2) −40 °C to +140 °C

Fig 5. Envelope curve for the magnitude of angular error

All information provided in this document is subject to legal disclaimers.

© NXP B.V. 2013. All rights reserved.

Table 14. Dynamics

Characteristics are valid for the operating conditions, as specified in Section 9.

Symbol	Parameter	Conditions	Min	Typ	Max	Unit
t_{on}	turn-on time	until first valid result	-	-	5	ms
f_{upd}	update frequency		2.4	3.125	-	kHz
t_s	settling time	after an ideal mechanical angle step of 45°, until 90 % of the final value is reached	-	-	1.8	ms
$t_{cmd(ent)}$	enter command mode time	after power-on	20	-	30	ms
$t_{rec(ov)}$	overvoltage recovery time	after overvoltage	-	-	4	ms

Table 15. Digital interface

Characteristics are valid for the operating conditions, as specified in Section 9.

Symbol	Parameter	Conditions	Min	Typ	Max	Unit
V_{IH}	HIGH-level input voltage		80	-	-	$\%V_{DD}$
V_{IL}	LOW-level input voltage		-	-	20	$\%V_{DD}$
V_{OH}	HIGH-level output voltage	I_O = 2 mA	80	-	-	$\%V_{DD}$
V_{OL}	LOW-level output voltage	I_O = 2 mA	-	-	20	$\%V_{DD}$
I_{od}	overdrive current	absolute value for overdriving the output buffer	-	-	20	mA
t_{start}	start time	LOW level before rising edge	5	-	-	µs
t_{stop}	stop time	HIGH level before falling edge	5	-	-	µs
T_{bit}	bit period	the load capacitance limits the minimum period	10	-	100	µs
ΔT_{bit}	bit period deviation	deviation between received clock and sent clock	$0.8T_{bit}$	$1T_{bit}$	$1.2T_{bit}$	µs
t_{w0}	pulse width 0		$0.175T_{bit}$	$0.25T_{bit}$	$0.375T_{bit}$	µs
t_{w1}	pulse width 1		$0.625T_{bit}$	$0.75T_{bit}$	$0.825T_{bit}$	µs
t_{to}	time-out time	communication reset guaranteed after maximum t_{to}	-	-	220	µs
$t_{tko(slv)}$	slave takeover time	duration of LOW level for slave takeover	1	-	5	µs
$t_{tko(mas)}$	master takeover time	duration of LOW level for master takeover	$0T_{bit}$	-	$0.5T_{bit}$	µs
t_{prog}	programming time	for a single memory address	20	-	-	ms
t_{cp}	charge pump time	waiting time after enabling the non-volatile memory charge pump clock	1	-	-	ms

Table 16. Internal capacitances

Characteristics are valid for the operating conditions, as specified in Section 9.

Symbol	Parameter	Conditions		Min	Typ	Max	Unit
C_{block}	blocking capacitance		[1]	50	100	150	nF
C_L	load capacitance		[1]	1.1	2.2	3.3	nF

[1] Measured at 1 MHz.

All information provided in this document is subject to legal disclaimers.

© NXP B.V. 2013. All rights reserved.

12. Definition of errors

12.1 General

Angular measurement errors by the KMA221 result from linearity errors, temperature drift errors and hysteresis errors. Figure 6 shows the output signal of an ideal sensor, where the measured angle ϕ_{meas} corresponds ideally to the magnetic field angle α. This curve represents the angle reference line $\phi_{ref}(\alpha)$ with a slope of 0.5 %V_{DD}/degree.

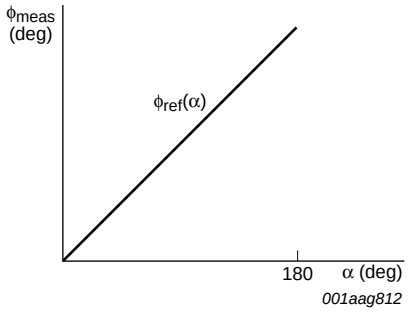

Fig 6. Definition of the reference line

The angular range is set to α_{max} = 180° and the clamping voltages are programmed to $V_{(CL)l}$ = 5 %V_{DD} and $V_{(CL)u}$ = 95 %V_{DD} for a valid definition of errors.

12.2 Hysteresis error

The device output performs a positive (clockwise) rotation and negative (counter clockwise) rotation over an angular range of 180° at a constant temperature.
The maximum difference between the angles defines the hysteresis error $\Delta\phi_{hys}$.

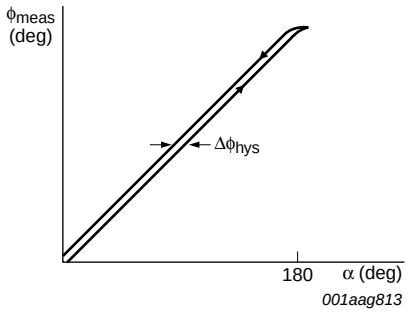

Fig 7. Definition of the hysteresis error

Equation 1 gives the mathematical description for the hysteresis value $\Delta\phi_{hys}$:

$$\Delta\phi_{hys}(\alpha) = \left|\phi_{meas}(\alpha \rightarrow 180^{\circ}) - \phi_{meas}(\alpha \rightarrow 0^{\circ})\right| \quad (1)$$

All information provided in this document is subject to legal disclaimers.

© NXP B.V. 2013. All rights reserved.

12.3 Linearity error

The KMA221 output signal deviation from a best straight line ϕ_{BSL}, with the same slope as the reference line, is defined as linearity error. The magnetic field angle is varied at fixed temperatures for measurement of this linearity error. The output signal deviation from the best straight line at the given temperature is the linearity error $\Delta\phi_{lin}$. It is a function of the magnetic field angle α and the temperature of the device T_{amb}.

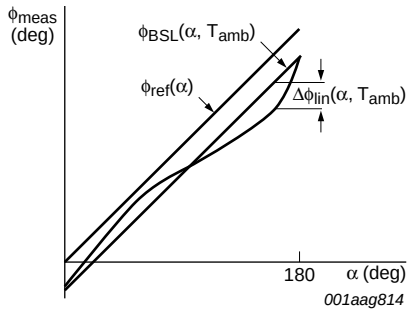

Fig 8. Definition of the linearity error

12.4 Microlinearity error

α is the magnetic field angle. If $\Delta\alpha$ = 1°, the microlinearity error $\Delta\phi_{\mu lin}$ is the device output deviation from 1°.

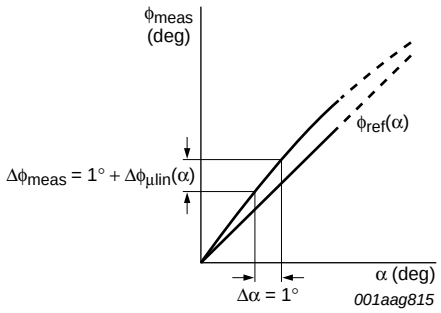

Fig 9. Definition of the microlinearity error

All information provided in this document is subject to legal disclaimers.

© NXP B.V. 2013. All rights reserved.

12.5 Temperature drift error

The temperature drift $\Delta\phi_{temp}$ is defined as the envelope over the deviation of the angle versus the temperature range. It is considered as the pure thermal effect.

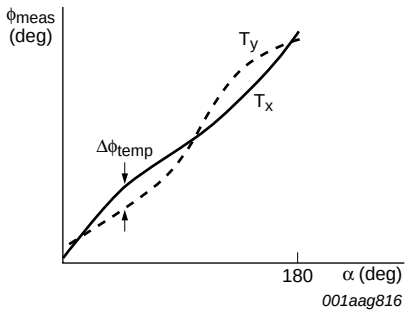

Fig 10. Definition of the temperature drift error

Equation 2 gives the mathematical description for temperature drift value $\Delta\phi_{temp}$:

$$\Delta\phi_{temp}(\alpha) = \left|\phi_{meas}(\alpha, T_x) - \phi_{meas}(\alpha, T_y)\right| \quad (2)$$

with:

T_x: temperature for maximum ϕ_{meas} at angle α

T_y: temperature for minimum ϕ_{meas} at angle α

The deviation from the value at room temperature $\Delta\phi_{temp|RT}$ describes the temperature drift of the angle, compared to the value, which the sensor provides at room temperature:

$$\Delta\phi_{temp|RT}(\alpha, T_{amb}) = \left|\phi_{meas}(\alpha, T_{amb}) - \phi_{meas}(\alpha, T_{RT})\right| \quad (3)$$

with:

T_{RT}: room temperature (25 °C)

12.6 Angular error

The angular error $\Delta\phi_{ang}$ is the difference between mechanical angle and sensor output during a movement from α_0 to α_1. Here α_0 and α_1 are arbitrary angles within the angular range. The customer initially programs the angle measurement at α_0 at room temperature and zero hour upon production. The angle measurement at α_1 is made at any temperature within the ambient temperature range:

$$\Delta\phi_{ang} = (\phi_{meas}(\alpha_1, T_{amb}) - \phi_{meas}(\alpha_0, T_{RT})) - (\alpha_1 - \alpha_0) \quad (4)$$

with:

α_0, α_1: arbitrary mechanical angles within the angular range

$\phi_{meas}(\alpha_0, T_{RT})$: programmed angle at α_0, T_{RT} = 25 °C and zero hour upon production

$\phi_{meas}(\alpha_1, T_{amb})$: the sensor measures angle at α_1 and any temperature within T_{amb}

All information provided in this document is subject to legal disclaimers.

© NXP B.V. 2013. All rights reserved.

This error comprises non-linearity and temperature drift related to the room temperature.

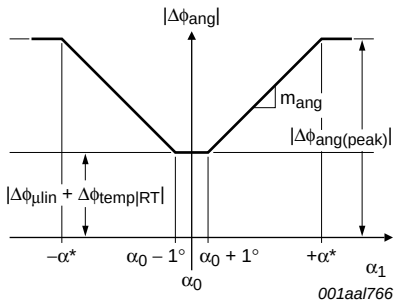

Fig 11. Envelope curve for the magnitude of angular error

Figure 11 shows the envelope curve for the magnitude of angular error $|\Delta\phi_{ang}|$ versus α_1 for all angles α_0 and all temperatures T_{amb} within the ambient temperature range. If α_1 is in the range of ±1° around α_0, $|\Delta\phi_{ang}|$ has its minimum. Here only the microlinearity error $\Delta\phi_{\mu lin}$ and the temperature drift related to the room temperature $|\Delta\phi_{temp|RT}|$ occurs. If α_1 deviates from α_0 by more than 1° in either direction, $|\Delta\phi_{ang}|$ can increase. Slope m_{ang} defines the gradient.

Equation 5 to Equation 8 express the angular error:

for $|\alpha_1 - \alpha_0| \leq 1°$

$$\left|\Delta\phi_{ang}\right| = \left|\Delta\phi_{\mu lin} + \Delta\phi_{temp|RT}\right| \quad (5)$$

for $1° < |\alpha_1 - \alpha_0| < \alpha^*$

$$\left|\Delta\phi_{ang}\right| = \left|\Delta\phi_{\mu lin} + \Delta\phi_{temp|RT}\right| + m_{ang} \times (\left|\alpha_1 - \alpha_0\right| - 1°) \quad (6)$$

for $|\alpha_1 - \alpha_0| \geq \alpha^*$

$$\left|\Delta\phi_{ang}\right| = \sqrt{(\Delta\phi_{lin})^2 + (\Delta\phi_{temp|RT})^2} \quad (7)$$

with:

$$\alpha^* = \frac{\left|\Delta\phi_{ang(peak)}\right| - \left|\Delta\phi_{\mu lin} + \Delta\phi_{temp|RT}\right|}{m_{ang}} + \alpha_0 + 1° \quad (8)$$

All information provided in this document is subject to legal disclaimers.

© NXP B.V. 2013. All rights reserved.

13. Programming

13.1 General description

The KMA221 provides an OWI to enable programming of the device which uses pin OUT/DATA bidirectionally.

In general the device runs in analog output mode, the normal operation mode. The embedded programming data configures this mode. After a power-on reset once time t_{on} has elapsed, it starts. In this mode, the magnetic field angle is converted into the corresponding output voltage.

A second mode, the command mode enables programming. In this mode, the customer can adjust all required parameters (for example zero angle and angular range) to meet the application requirements. After enabling the internal charge pump and waiting for t_{cp}, the data is stored in the non-volatile memory. After changing the contents of the memory, recalculate and write the checksum (see Section 13.4).

In order to enter the command mode, send a specific command sequence after a power-on reset and during the time slot $t_{cmd(ent)}$. The external source used to send the command sequence must overdrive the output buffers of the KMA221. In doing so, it provides current I_{od}.

During communication, the KMA221 is always the slave and the external programming hardware is always the master. Figure 12 illustrates the structure of the OWI data format.

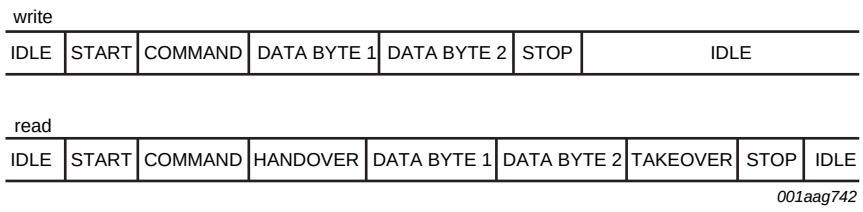

Fig 12. OWI data format

The master provides the start condition, which is a rising edge after a LOW level. Then a command byte which can be either a read or a write command is sent. Depending on the command, the master or the slave has to send the data immediately after the command sequence. If there is a read command, an additional handover or takeover bit is inserted before and after the data bytes. The master must close each communication with a stop condition. If the slave does not receive a rising edge for a time longer than t_{to}, a time-out condition occurs. The bus is reset to the idle state and waits for a start condition and a new command. This behavior can be used to synchronize the device regardless of the previous state.

All communication is based on this structure (see Figure 12), even for entering the command mode. The customer can access the non-volatile memory, CTRL1, TESTCTRL0 and SIGNATURE registers (described in Section 13.5). Only a power-on reset leaves the command mode. A more detailed description of the programming is given in the next sections.

All information provided in this document is subject to legal disclaimers.

© NXP B.V. 2013. All rights reserved.

13.2 Timing characteristics

As described in the previous section, a start and stop condition is necessary for communication. The LOW-level duration before the rising edge of the start condition is defined as t_{start}. The HIGH-level duration after the rising edge of the stop condition is defined as t_{stop}. These parameters, together with all other timing characteristics are shown in Table 15.

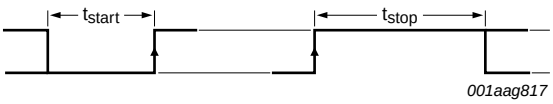

Fig 13. OWI start and stop condition

Figure 14 shows the coding of a single bit with a HIGH level of V_{IH} and a LOW level of V_{IL}. Here the pulse width t_{w1} or t_{w0} represents a logic 1 or a logic 0 of a full bit period T_{bit}, respectively.

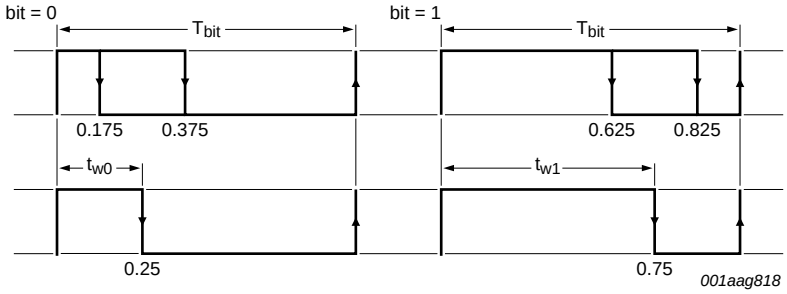

Fig 14. OWI timing

13.3 Sending and receiving data

The master has to control the communication during sending or receiving data. The command byte defines the region, address and type of command the master requests. Read commands need an additional handover or takeover bit. Insert this bit before and after the two data bytes (see Figure 12). However the OWI is a serial data transmission, whereas the Most Significant Byte (MSB) send at first.

Table 17. Format of a command byte

7	6	5	4	3	2	1	0
CMD7	CMD6	CMD5	CMD4	CMD3	CMD2	CMD1	CMD0

Table 18. Command byte bit description

Bit	Symbol	Description
7 to 5	CMD[7:5]	region bits
		000 = 16-bit non-volatile memory
		001 to 011 = reserved
		100 = 16-bit register
		101 to 111 = reserved

All information provided in this document is subject to legal disclaimers.

© NXP B.V. 2013. All rights reserved.

Table 18. Command byte bit description *…continued*

Bit	Symbol	Description
4 to 1	CMD[4:1]	address bits
0	CMD0	read/write
		0 = write
		1 = read

A more detailed description of all customer accessible registers is given in Section 13.5. Both default value and the complete command including the address and write or read request are also listed.

13.3.1 Write access

To write data to the non-volatile memory, enable the internal charge pump. Set bits CP_CLOCK_EN and WRITE_EN and wait for t_{cp} enables the internal charge pump. Perform the following procedure for write access:

1. Start condition: The master drives a rising edge after a LOW level
2. Command: The master sends a write command (CMD0 = 0)
3. Data: The master sends two data bytes
4. Stop condition: The master drives a rising edge after a LOW level

Figure 15 shows the write access of the digital interface. The signal OWI represents the data on the bus from the master or slave. The signals: master output enable and slave output enable indicate when the master or the slave output is enabled or disabled, respectively.

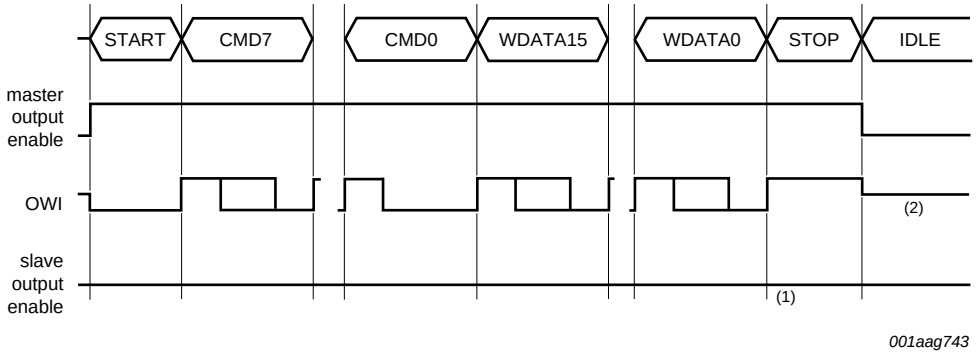

(1) Missing rising edges generate a time-out condition and the written data is ignored.

(2) If the master does not drive the bus, the bus-pull defines the bus.

Fig 15. OWI write access

Note: As already mentioned in Section 13.1, use the write procedure to enter the command mode. If command mode is not entered, communication is not possible and the sensor operates in normal operation mode. After changing an address, the time t_{prog} must elapse before changing another address. After changing the contents of the non-volatile memory, recalculate and write the checksum (see Section 13.4).

All information provided in this document is subject to legal disclaimers.

© NXP B.V. 2013. All rights reserved.

13.3.2 Read access

To read data from the sensor, perform the following procedure:

1. Start condition: The master drives a rising edge after a LOW level
2. Command: The master sends a read command (CMD0 = 1)
3. Handover: The master sends a handover bit, that is a logic 0 and disables the output after a three-quarter bit period
4. Takeover: The slave drives a LOW level after the falling edge for $t_{tko(slv)}$
5. Data: The slave sends two data bytes
6. Handover: The slave sends a handover bit, that is a logic 0 and disables the output after a three-quarter bit period
7. Takeover: The master drives a LOW level after the falling edge for $t_{tko(mas)}$
8. Stop condition: The master drives a rising edge after a LOW level

Figure 16 shows the read access of the digital interface. The signal OWI represents the data on the bus from the master or slave. The signals: master output enable and slave output enable indicate when the master or the slave output is enabled or disabled, respectively.

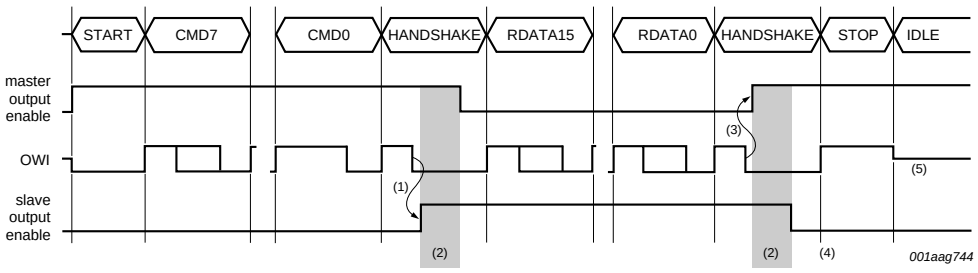

(1) Duration of LOW level for slave takeover $t_{tko(slv)}$.

(2) The master output enable and the slave output enable overlap, because both drive a LOW level. However this behavior ensures the independency from having a pull-up or pull-down on the bus. In addition, it improves the EMC robustness, because all levels are actively driven.

(3) Duration of LOW level for master takeover $t_{tko(mas)}$.

(4) If the master does not take over, the pull-up generates the stop condition. Otherwise a time-out is generated if there is a pull-down and the slave waits for a rising edge as start condition.

(5) If the master does not drive the bus, the bus-pull defines the bus.

Fig 16. OWI read access

All information provided in this document is subject to legal disclaimers.

© NXP B.V. 2013. All rights reserved.

13.3.3 Entering the command mode

After a power-on reset, the sensor provides a time slot $t_{cmd(ent)}$ for entering the command mode. Send a specific command sequence (see Figure 17). If command mode is not entered, the sensor starts in the normal operation mode. If the sensor stays in the diagnostic mode, the master can write the signature without a power-on reset.

During the command mode sequence, the analog output is enabled. The external programming hardware has to overdrive the output with current I_{od}. If command mode is activated, the analog output is disabled and pin OUT/DATA operates as a digital interface.

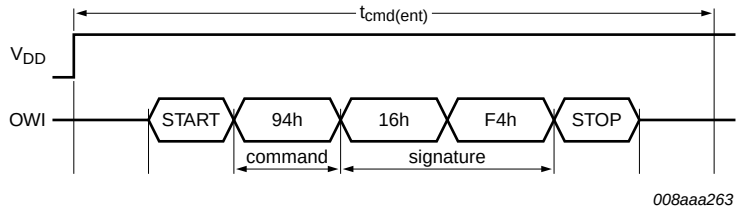

Fig 17. OWI command mode procedure

13.4 Cyclic redundancy check

As already mentioned in Section 7, there is an 8-bit checksum for the non-volatile memory data. To calculate this value, the MSB of the memory data word generates the CRC at first over all corresponding addresses in increasing order.

Read out all addresses from 8h to Fh for calculating the checksum. The Least Significant Byte (LSB) of address Fh which contains the previous checksum must be overwritten with 0h before the calculation can be started.

Setting bits CP_CLOCK_EN and WRITE_EN (see Section 13.5.1) and waiting for t_{cp} enables the internal charge pump for programming.

The generator polynomial for the calculation of the checksum is:

$$G(x) = x^8 + x^2 + x + 1 \quad (9)$$

With a start value of FFh and the data bits are XOR at the x^8 point.

All information provided in this document is subject to legal disclaimers.

© NXP B.V. 2013. All rights reserved.

13.4.1 Software example in C

```
#include <stdio.h.>

// calc_crc accepts unsigned 16-bit data in data
int calc_crc(int crc, unsigned int data)
{
     const int gpoly = 0x107; // generator polynomial
     int i;                   //index variable
     for (i = 15; i >= 0; i--)
     {
          crc <<= 1;          //shift left
          crc |= (int) ((data & (1u<<i))>>i);
          // XOR of with generator polynomial when MSB(9) = HIGH
          if (crc & 0x100) crc ^= gpoly;
     }
     return crc;
}
int main(void)
{
     int crc, crc_res, i;
     // 8 LSB are CRC field filled with 0
     unsigned int data_seq[] = {0x0000, 0xFFC1, 0x0400, 0x0100,
                                0x1300, 0x0000, 0x0000, 0x0000};
     // calculate checksum over all data
     crc = 0xFF;              // start value of crc register
     printf("Address\tValue\n");
     for (i = 0; i <= 7; i++)
          {
          printf("0x%1X\t0x%04X\n", i, data_seq[i]);
          crc = calc_crc(crc, data_seq[i]);
          }
     crc_res = crc;           // crc_res = 0xA9
     printf("\nChecksum\n0x%02X\n", crc_res);
     // check procedure for preceding data sequence
     crc = 0xFF;
     for (i = 0; i <= 6; i++)
          crc = calc_crc(crc, data_seq[i]);
     // last word gets crc inserted
     crc = calc_crc(crc, data_seq[i] | crc_res);
     printf("\nCheck procedure for data sequence: must be 0x00 is 0x%02X.\n", crc);
     return 1;
}
```

The checksum of this data sequence is A9h.

All information provided in this document is subject to legal disclaimers.

© NXP B.V. 2013. All rights reserved.

13.5 Registers

13.5.1 Command registers

To enter the command mode, write the signature given in Table 19 into the specific register using the OWI. Do this procedure as described in Section 13.3.3, with a write command, the signature follows it, but after a power-on reset and not later than $t_{cmd(ent)}$.

Table 19. Command registers

Command write/read	Register	Bit	Access	Field	Description
82h/83h	CTRL1	15	R	IN_DIAG_MODE	shows if there is a diagnostic condition present; the setting of register field FORCE_DIAG_OFF does not affect this bit
		14	W	FORCE_DIAG_OFF	force diagnostic mode off; default: 0b
		13	-	-	reserved
		12	R	LOW_VOLTAGE_DET	low voltage condition detected
		11	R/W	CP_CLOCK_EN	charge pump clock enabled (must be set after setting write enable signal for writing to non-volatile memory); default: 0b
		10 and 9	-	-	reserved
		8	R	ERR_CORRECT	single-bit error of non-volatile memory has been detected and corrected; updated every memory readout; remains set until the diagnostic condition disappears and a power-on reset is done
		7	R	UNCORR_ERR	double-bit error of non-volatile memory has been detected; updated every memory readout; remains set until the diagnostic condition disappears and a power-on reset is done
		6	R	MAGNET_LOSS_DET	magnet-loss detected; bit remains set until the diagnostic condition disappears and a power-on reset is done; enable magnet-loss detection for entering diagnostic mode
		5	R	BROKEN_BOND_DET	broken bond wire detected; bit remains set until the diagnostic condition disappears and a power-on reset is done
		4	R	CRC_BAD	checksum error detected; updated every start-up
		3 to 0	-	-	reserved
94h/-	SIGNATURE	15 to 0	W	SIGNATURE	to enter command mode, write signature 16F4h within $t_{cmd(ent)}$; for more details, see Section 13.3.3
96h/97h	TESTCTRL0	15 to 12	-	-	reserved
		11	W	WRITE_EN	write enable signal; set before writing to non-volatile memory; default: 0b
		10 to 0	-	-	reserved

All information provided in this document is subject to legal disclaimers.

© NXP B.V. 2013. All rights reserved.

13.5.2 Non-volatile memory registers

The device includes several internal registers which are used for customization and identification.

The initial signature allows read access to all areas but only write access to customer registers. Write accesses to reserved areas are ignored. Since these registers are implemented as non-volatile memory cells, writing to the registers needs a specific time t_{prog} after each write access to complete.

As there is no check for the programming time, make sure that no other accesses to the non-volatile memory are made during the programming cycle. Do not address the non-volatile memory during the time t_{prog}.

Note: Before data can be stored in the non-volatile memory, switch on the internal charge pump for the programming duration by setting register CTRL1, bit 11 CP_CLOCK_EN and register TESTCTRL0, bit 11 WRITE_EN. To calculate the checksum, read out and consult register addresses 8h to Fh.

Table 20. Non-volatile memory registers

Address	Command write/read	Register	Bit	Description	Default MSB/LSB
0h	-/01h	reserved	-	addresses are reserved for calibration purposes	[1]
1h	-/03h				
2h	-/05h				
3h	-/07h				
4h	-/09h				
5h	-/0Bh				
6h	-/0Dh				
7h	-/0Fh				
8h	10h/11h	ZERO_ANGLE	15 to 0	mechanical zero degree position; see Table 21	00h/00h
9h	12h/13h	ANG_RNG_MULT_MSB	15 to 6	CLAMP_SW_ANGLE; when the measured angle is bigger than CLAMP_SW_ANGLE the output switches to CLAMP_LO for a positive slope; see Table 26	FFh/C1h
			5 to 0	ANG_RNG_MULT_MSB; most significant bits of the angular range multiplicator; see Table 24	
Ah	14h/15h	ANG_RNG_MULT_LSB	15 and 14	DIAGNOSTIC_LEVEL; diagnostic level behavior of the analog output; see Table 25 **00b —** active LOW (in lower diagnostic range) with driver strength of the analog output **01b —** active HIGH (in upper diagnostic range) with driver strength of the analog output **10b —** reserved **11b —** reserved	04h/00h
			13	SLOPE_DIR; slope of analog output **0b —** rising (not inverted) **1b —** falling (inverted)	
			12 to 0	ANG_RNG_MULT_LSB; least significant bits of the angular range multiplicator	

All information provided in this document is subject to legal disclaimers.

© NXP B.V. 2013. All rights reserved.

Table 20. Non-volatile memory registers *...continued*

Address	Command write/read	Register	Bit	Description	Default MSB/LSB
Bh	16h/17h	CLAMP_LO	15	**0b —** reserved	01h/00h
			14 and 13	undefined[2]	
			12 to 0	lower clamping level; see Table 22	
Ch	18h/19h	CLAMP_HI	15 to 13	undefined[2]	13h/00h
			12 to 0	upper clamping level; see Table 23	
Dh	1Ah/1Bh	ID_LO	15 to 0	lower 16 bits of identification code	00h/00h
Eh	1Ch/1Dh	ID_HI	15 to 0	upper 16 bits of identification code	00h/00h
Fh	1Eh/1Fh	CTRL_CUST	15	LOCK; irreversible write protection of non-volatile memory **1b —** enabled	00h/[1]
			14 to 8	MAGNET_LOSS; magnet-loss detection **00h —** disabled **49h —** enabled	
			7 to 0	CRC; checksum (see Section 13.4)	

[1] Variable and individual for each device.

[2] Undefined; write as zero for default.

Table 21. ZERO_ANGLE - mechanical zero degree position (address 8h) bit allocation

Data format: unsigned fixed point; resolution: 2^{-16}.

Bit	15	14	13	12	11	10	9	8	7	6	5	4	3	2	1	0
Value	2^{-1}	2^{-2}	2^{-3}	2^{-4}	2^{-5}	2^{-6}	2^{-7}	2^{-8}	2^{-9}	2^{-10}	2^{-11}	2^{-12}	2^{-13}	2^{-14}	2^{-15}	2^{-16}

Mechanical angular range 0000h = 0° to FFFFh = 180° − 1 LSB.

Examples:

- Mechanical zero angle 0° = 0000h
- Mechanical zero angle 10° = 0E38h
- Mechanical zero angle 45° = 4000h

Table 22. CLAMP_LO - lower clamping level (address Bh) bit allocation

Data format: unsigned integer (DAC values 256 to 4864); resolution: 2^{0}.

Bit	15	14	13	12	11	10	9	8	7	6	5	4	3	2	1	0
Value	0	U[1]	U[1]	2^{12}	2^{11}	2^{10}	2^{9}	2^{8}	2^{7}	2^{6}	2^{5}	2^{4}	2^{3}	2^{2}	2^{1}	2^{0}

[1] Undefined; write as zero for default; returns any value when read.

Values 0 to 255 are reserved. It is not permitted to use such values.

Examples:

- 100 %V_{DD} = 5120 (reserved)
- 10 %V_{DD} = 512
- 5 %V_{DD} = 256

All information provided in this document is subject to legal disclaimers.

© NXP B.V. 2013. All rights reserved.

Table 23. CLAMP_HI - upper clamping level (address Ch) bit allocation

Data format: unsigned integer (DAC values 256 to 4864); resolution: 2^0.

Bit	15	14	13	12	11	10	9	8	7	6	5	4	3	2	1	0
Value	U[1]	U[1]	U[1]	2^{12}	2^{11}	2^{10}	2^9	2^8	2^7	2^6	2^5	2^4	2^3	2^2	2^1	2^0

[1] Undefined; write as zero for default; returns any value when read.

Values 4865 to 5120 are reserved. It is not permitted to use such values.

Examples:

- 100 %V_{DD} = 5120 (reserved)
- 95 %V_{DD} = 4864
- 90 %V_{DD} = 4608

Table 24. ANG_RNG_MULT_MSB - most significant bits of angular range multiplicator (address 9h) bit allocation

Data format: unsigned fixed point; resolution: 2^{-1}.

Bit	15	14	13	12	11	10	9	8	7	6	5	4	3	2	1	0
Value	CLAMP_SW_ANGLE										2^4	2^3	2^2	2^1	2^0	2^{-1}

$$ANG_RNG_MULT = \frac{CLAMP_HI - CLAMP_LO}{8192} \times \frac{180°}{ANGULAR_RANGE} \quad (10)$$

Examples:

- $ANG_RNG_MULT = \frac{4864 - 256}{8192} \times \frac{180°}{180°} = 0.5625$
- $ANG_RNG_MULT = \frac{4864 - 256}{8192} \times \frac{180°}{90°} = 1.125$

Table 25. ANG_RNG_MULT_LSB - least significant bits of angular range multiplicator (address Ah) bit allocation

Data format: unsigned fixed point; resolution: 2^{-14}.

Bit	15	14	13	12	11	10	9	8	7	6	5	4	3	2	1	0
Value	V[1]		V[1]	2^{-2}	2^{-3}	2^{-4}	2^{-5}	2^{-6}	2^{-7}	2^{-8}	2^{-9}	2^{-10}	2^{-11}	2^{-12}	2^{-13}	2^{-14}

[1] Variable; depending on the setting of diagnostic level and slope of analog output.

$$ANG_RNG_MULT = \frac{CLAMP_HI - CLAMP_LO}{8192} \times \frac{180°}{ANGULAR_RANGE} \quad (11)$$

Table 26. CLAMP_SW_ANGLE - clamp switch angle (address 9h) bit allocation

Data format: unsigned fixed point; resolution: 2^{-10}.

Bit	15	14	13	12	11	10	9	8	7	6	5	4	3	2	1	0
Value	2^{-1}	2^{-2}	2^{-3}	2^{-4}	2^{-5}	2^{-6}	2^{-7}	2^{-8}	2^{-9}	2^{-10}	ANG_RNG_MULT_MSB					

Mechanical angular range 0000h = 0° to 3FFh = 180° − 1 LSB.

$$CLAMP_SW_ANGLE = \frac{1}{2} \times \left(1 + \frac{CLAMP_HI - CLAMP_LO}{8192} \times \frac{1}{ANG_RNG_MULT}\right) \quad (12)$$

If the magnetic field angle is larger than the CLAMP_SW_ANGLE, the output switches to CLAMP_LO for a positive slope. Program the value of CLAMP_SW_ANGLE, which can be calculated from other non-volatile memory constants.

All information provided in this document is subject to legal disclaimers.

© NXP B.V. 2013. All rights reserved.

14. Electromagnetic compatibility

EMC is verified in an independent and certified test laboratory.

14.1 Emission (CISPR 25)

Tests according to CISPR 25 were fulfilled.

14.1.1 Conducted radio disturbance

Test of the device according to CISPR 25, third edition (2008-03), Chapter 6.2.

Classification level: 5.

14.1.2 Radiated radio disturbance

Test of the device according to CISPR 25, third edition (2008-03), Chapter 6.4.

Classification level: 5 (without addition of 6 dB in FM band).

14.2 Radiated disturbances (ISO 11452-1 third edition (2005-02), ISO 11452-2, ISO 11452-4 and ISO 11452-5)

The common understanding of the requested function is that an effect is tolerated as described in Table 27 during the disturbance. The reachable values are setup-dependent and differ from the final application.

Table 27. Failure condition for radiated disturbances

Parameter	Comment	Min	Max	Unit
Variation of output signal in analog output mode	value measured relative to the output at test start	-	±0.9	$\%V_{DD}$

14.2.1 Absorber lined shielded enclosure

Tests according to ISO 11452-2, second edition (2004-11), were fulfilled.

Test level: 200 V/m; extended up to 4 GHz.

State: A.

14.2.2 Bulk-current injection

Tests according to ISO 11452-4, third edition (2005-04), were fulfilled.

Test level: 200 mA.

State: A.

14.2.3 Strip line

Tests according to ISO 11452-5, second edition (2002-04), were fulfilled.

Test level: 200 V/m; extended up to 1 GHz.

State: A.

All information provided in this document is subject to legal disclaimers.

© NXP B.V. 2013. All rights reserved.

14.2.4 Immunity against mobile phones

Tests according to ISO 11452-2, second edition (2004-11), were fulfilled.

State: A.

Definition of Global System for Mobile Communications (GSM) signal:

- Pulse modulation: per GSM specification (217 Hz; 12.5 % duty cycle)
- Modulation grade: ≥ 60 dB
- Sweep: linear 800 MHz to 3 GHz (duration 10 s at 890 MHz, 940 MHz and 1.8 GHz band)
- Antenna polarization: vertical, horizontal
- Field strength: 200 V/m during on-time [calibration in Continuous Wave (CW)]

In deviation of ISO 11452-2, a GSM signal instead of an AM signal was used.

14.3 Electrical transient transmission by capacitive coupling [ISO 7637-3, second edition (2007-07)]

The common understanding of the requested function is that an effect is tolerated as described in Table 28 during the disturbance.

Table 28. Failure condition for electrical transient transmission

Parameter	Comment	Min	Max	Unit
Variation of output signal in analog output mode	value measured relative to the output at test start	-	±0.9	$\%V_{DD}$

Tests according to ISO 7637-3 were fulfilled.

Test level: IV (for 12 V electrical system).

Classification level: B for pulse Fast a, B for pulse Fast b.

15. ElectroStatic Discharge (ESD)

15.1 Human body model (AEC-Q100-002)

The KMA221 is protected up to 8 kV, according to the human body model at 100 pF and 1.5 kΩ. This protection is ensured at all pins.

Classification level: H3B.

All information provided in this document is subject to legal disclaimers.

© NXP B.V. 2013. All rights reserved.

15.2 Human metal model (ANSI/ESD SP5.6-2009)

The KMA221 is protected up to 8 kV, according to the human metal model at 150 pF and 330 Ω inside the ESD gun. This test utilizes waveforms of the IEC 61000-4-2 standard on component level. Apply the contact discharge in an unsupplied state at pins OUT/DATA and V_{DD} referred to GND which is connected directly to the ground plane.

Test setup: A.

Test level: 5.

15.3 Machine model (AEC-Q100-003)

The KMA221 is protected up to 400 V, according to the machine model. This protection is ensured at all pins.

Classification level: M4.

All pins have latch-up protection.

15.4 Charged-device model (AEC-Q100-011)

The KMA221 is protected up to 750 V, according to the charged-device model. This protection is ensured at all pins.

Classification level: C4.

16. Application information

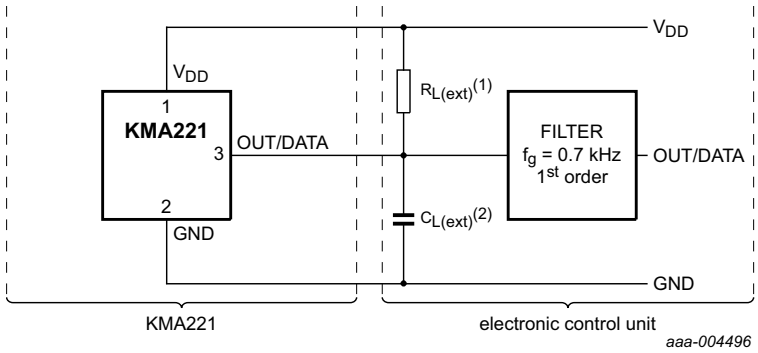

(1) Power-loss detection is only possible with a load resistance within the specified range connected to the supply or ground line.

(2) The load capacitance between ground and analog output can be used to improve the electromagnetic immunity of the device. A blocking capacitance to suppress noise on the supply line of the device is integrated into the package and thus not required externally.

Fig 18. Application diagram of KMA221

All information provided in this document is subject to legal disclaimers.

© NXP B.V. 2013. All rights reserved.

17. Test information

17.1 Quality information

This product has been qualified in accordance with the Automotive Electronics Council (AEC) standard *Q100 Rev-G - Failure mechanism based stress test qualification for integrated circuits*, and is suitable for use in automotive applications.

18. Marking

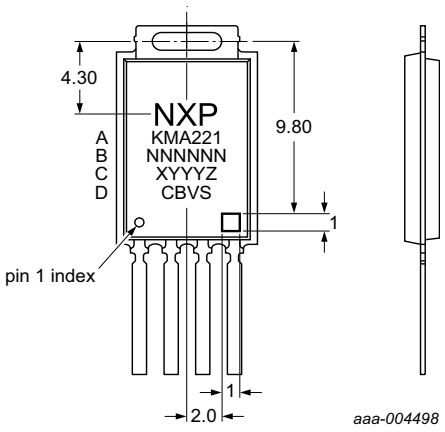

A: leading letters of type name

B: batch number

C: date code

X: product manufacturing code; m for manufacturing Manila [Assembly Plant Philippines (APP)]

YYY: day of year

Z: year of production (last figure)

D: additional marking

C: capacitor type (T: TDK)

B: burn-in information (0: without burn-in; 1: with burn-in)

V: IC version (1, 2, 3, ...)

S: development status (X: development; C: validated; blank: released)

Fig 19. Marking

All information provided in this document is subject to legal disclaimers.

© NXP B.V. 2013. All rights reserved.

19. Package information

19.1 Reading point position

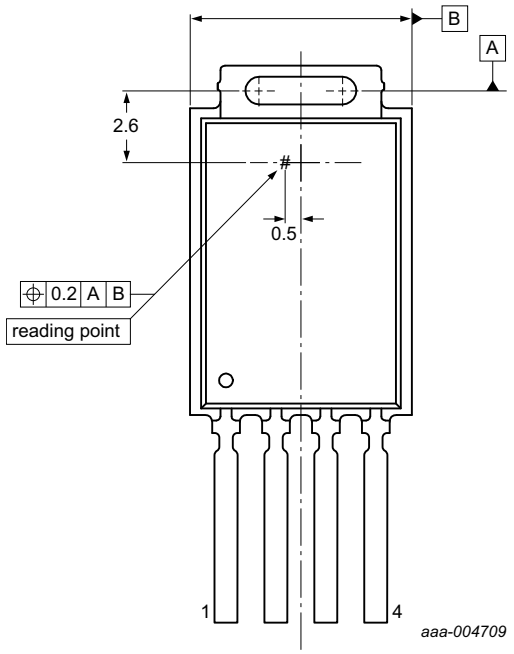

Dimensions in mm

Fig 20. Reading point position

19.2 Terminals

Lead frame material: CuZr with 99.9 % Cu and 0.1 % Zr.

All information provided in this document is subject to legal disclaimers.

© NXP B.V. 2013. All rights reserved.

20. Package outline

SIL4: plastic, single in-line package **SOT1188-1**

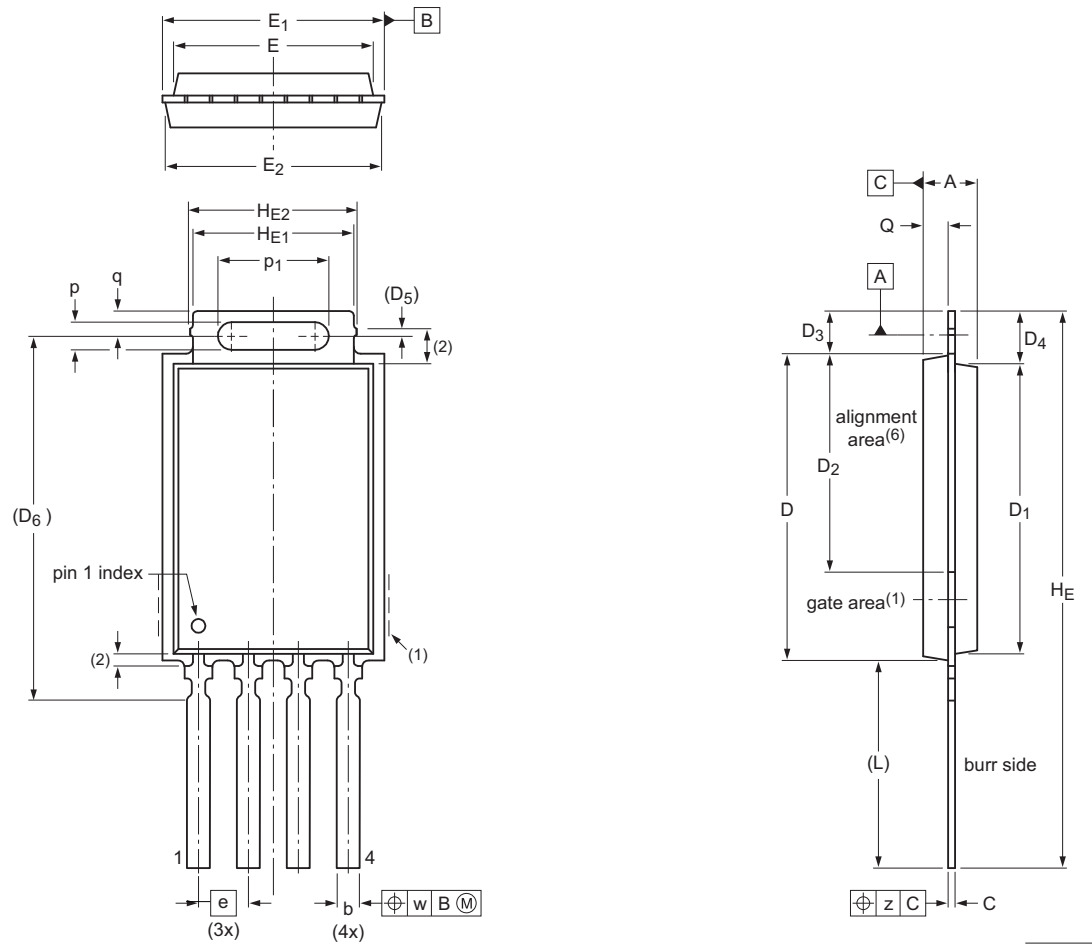

q	s	w	z
0.95 0.90 0.85	0.2	0.2	0.8

Dimensions

Unit		A	b	C(3)	D	D1	D2(1)	D3	D4	D5(4, ref)	D6(ref)	E	E1(5,6)	E2	e	HE	HE1	HE2	L(ref)	p	p1	Q
	max	2.05	0.85	0.30	11.15	10.62		1.7	2.05			7.5	8.05	7.9		20.7	5.85	6.20		1.05	4.05	0.95
mm	nom	1.95	0.80	0.27	11.00	10.47	7.81	1.6	1.95	0.27	12.93	7.4	8.00	7.8	1.8	20.5	5.80		7.9	1.00	4.00	0.90
	min	1.85	0.75	0.24	10.85	10.32		1.5	1.85			7.3	7.95	7.7		20.3	5.75			0.95	3.95	0.85

Note
1. Gate area, up to 0.2 mm protrusion possible at both sides.
2. Terminal and plastic uncontrolled in this area.
3. Burr not included.
4. Measured at the cutting edge of the fin radius.
5. Measured along the straight edge of the package above note 1.
6. Alignment area, up to 1.5 mm long rim break outs can reduce E1 dimension.

sot1188-1_po

Outline version	References				European projection	Issue date
	IEC	JEDEC	JEITA			
SOT1188-1	- - -	- - -	- - -			~~12-05-14~~ 12-08-20

Fig 21. Package outline SOT1188-1 (SIL4)

All information provided in this document is subject to legal disclaimers.

© NXP B.V. 2013. All rights reserved.

21. Handling information

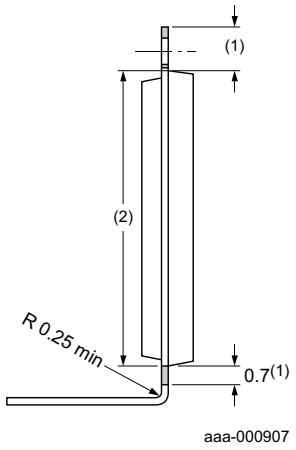

Dimensions in mm

(1) No bending allowed.

(2) Plastic body and interface plastic body - leads: application of bending forces not allowed.

Fig 22. Bending recommendation

22. Solderability information

The solderability qualification is according to AEC-Q100 Rev-G. Recommended soldering process for leaded devices is wave soldering. The maximum soldering temperature is 260 °C for maximum 5 s. Device terminals are compatible with laser and electrical welding.

23. Revision history

Table 29. Revision history

Document ID	Release date	Data sheet status	Change notice	Supersedes
KMA221 v.1	20130716	Product data sheet	-	-

All information provided in this document is subject to legal disclaimers.

© NXP B.V. 2013. All rights reserved.

24. Legal information

24.1 Data sheet status

Document status[1][2]	Product status[3]	Definition
Objective [short] data sheet	Development	This document contains data from the objective specification for product development.
Preliminary [short] data sheet	Qualification	This document contains data from the preliminary specification.
Product [short] data sheet	Production	This document contains the product specification.

[1] Please consult the most recently issued document before initiating or completing a design.

[2] The term 'short data sheet' is explained in section "Definitions".

[3] The product status of device(s) described in this document may have changed since this document was published and may differ in case of multiple devices. The latest product status information is available on the Internet at URL http://www.nxp.com.

24.2 Definitions

Draft — The document is a draft version only. The content is still under internal review and subject to formal approval, which may result in modifications or additions. NXP Semiconductors does not give any representations or warranties as to the accuracy or completeness of information included herein and shall have no liability for the consequences of use of such information.

Short data sheet — A short data sheet is an extract from a full data sheet with the same product type number(s) and title. A short data sheet is intended for quick reference only and should not be relied upon to contain detailed and full information. For detailed and full information see the relevant full data sheet, which is available on request via the local NXP Semiconductors sales office. In case of any inconsistency or conflict with the short data sheet, the full data sheet shall prevail.

Product specification — The information and data provided in a Product data sheet shall define the specification of the product as agreed between NXP Semiconductors and its customer, unless NXP Semiconductors and customer have explicitly agreed otherwise in writing. In no event however, shall an agreement be valid in which the NXP Semiconductors product is deemed to offer functions and qualities beyond those described in the Product data sheet.

24.3 Disclaimers

Limited warranty and liability — Information in this document is believed to be accurate and reliable. However, NXP Semiconductors does not give any representations or warranties, expressed or implied, as to the accuracy or completeness of such information and shall have no liability for the consequences of use of such information. NXP Semiconductors takes no responsibility for the content in this document if provided by an information source outside of NXP Semiconductors.

In no event shall NXP Semiconductors be liable for any indirect, incidental, punitive, special or consequential damages (including - without limitation - lost profits, lost savings, business interruption, costs related to the removal or replacement of any products or rework charges) whether or not such damages are based on tort (including negligence), warranty, breach of contract or any other legal theory.

Notwithstanding any damages that customer might incur for any reason whatsoever, NXP Semiconductors' aggregate and cumulative liability towards customer for the products described herein shall be limited in accordance with the *Terms and conditions of commercial sale* of NXP Semiconductors.

Right to make changes — NXP Semiconductors reserves the right to make changes to information published in this document, including without limitation specifications and product descriptions, at any time and without notice. This document supersedes and replaces all information supplied prior to the publication hereof.

Suitability for use in automotive applications — This NXP Semiconductors product has been qualified for use in automotive applications. Unless otherwise agreed in writing, the product is not designed, authorized or warranted to be suitable for use in life support, life-critical or safety-critical systems or equipment, nor in applications where failure or malfunction of an NXP Semiconductors product can reasonably be expected to result in personal injury, death or severe property or environmental damage. NXP Semiconductors and its suppliers accept no liability for inclusion and/or use of NXP Semiconductors products in such equipment or applications and therefore such inclusion and/or use is at the customer's own risk.

Applications — Applications that are described herein for any of these products are for illustrative purposes only. NXP Semiconductors makes no representation or warranty that such applications will be suitable for the specified use without further testing or modification.

Customers are responsible for the design and operation of their applications and products using NXP Semiconductors products, and NXP Semiconductors accepts no liability for any assistance with applications or customer product design. It is customer's sole responsibility to determine whether the NXP Semiconductors product is suitable and fit for the customer's applications and products planned, as well as for the planned application and use of customer's third party customer(s). Customers should provide appropriate design and operating safeguards to minimize the risks associated with their applications and products.

NXP Semiconductors does not accept any liability related to any default, damage, costs or problem which is based on any weakness or default in the customer's applications or products, or the application or use by customer's third party customer(s). Customer is responsible for doing all necessary testing for the customer's applications and products using NXP Semiconductors products in order to avoid a default of the applications and the products or of the application or use by customer's third party customer(s). NXP does not accept any liability in this respect.

Limiting values — Stress above one or more limiting values (as defined in the Absolute Maximum Ratings System of IEC 60134) will cause permanent damage to the device. Limiting values are stress ratings only and (proper) operation of the device at these or any other conditions above those given in the Recommended operating conditions section (if present) or the Characteristics sections of this document is not warranted. Constant or repeated exposure to limiting values will permanently and irreversibly affect the quality and reliability of the device.

Terms and conditions of commercial sale — NXP Semiconductors products are sold subject to the general terms and conditions of commercial sale, as published at http://www.nxp.com/profile/terms, unless otherwise agreed in a valid written individual agreement. In case an individual agreement is concluded only the terms and conditions of the respective agreement shall apply. NXP Semiconductors hereby expressly objects to applying the customer's general terms and conditions with regard to the purchase of NXP Semiconductors products by customer.

All information provided in this document is subject to legal disclaimers.

© NXP B.V. 2013. All rights reserved.

No offer to sell or license — Nothing in this document may be interpreted or construed as an offer to sell products that is open for acceptance or the grant, conveyance or implication of any license under any copyrights, patents or other industrial or intellectual property rights.

Export control — This document as well as the item(s) described herein may be subject to export control regulations. Export might require a prior authorization from competent authorities.

Translations — A non-English (translated) version of a document is for reference only. The English version shall prevail in case of any discrepancy between the translated and English versions.

24.4 Trademarks

Notice: All referenced brands, product names, service names and trademarks are the property of their respective owners.

25. Contact information

For more information, please visit: **http://www.nxp.com**

For sales office addresses, please send an email to: **salesaddresses@nxp.com**

All information provided in this document is subject to legal disclaimers.

© NXP B.V. 2013. All rights reserved.

26. Contents

1 Product profile 1
1.1 General description 1
1.2 Features and benefits 1
2 Pinning information 2
3 Ordering information 2
4 Functional diagram 3
5 Functional description 4
5.1 Angular measurement directions 4
6 Analog output 5
7 Diagnostic features 6
7.1 CRC and EDC supervision 6
7.2 Magnet-loss detection 6
7.3 Power-loss detection 6
7.4 Broken bond wire detection 7
7.5 Low supply voltage detection and overvoltage protection 7
8 Limiting values 8
9 Recommended operating conditions 9
10 Thermal characteristics 9
11 Characteristics 9
12 Definition of errors 13
12.1 General 13
12.2 Hysteresis error 13
12.3 Linearity error 14
12.4 Microlinearity error 14
12.5 Temperature drift error 15
12.6 Angular error 15
13 Programming 17
13.1 General description 17
13.2 Timing characteristics 18
13.3 Sending and receiving data 18
13.3.1 Write access 19
13.3.2 Read access 20
13.3.3 Entering the command mode 21
13.4 Cyclic redundancy check 21
13.4.1 Software example in C 22
13.5 Registers 23
13.5.1 Command registers 23
13.5.2 Non-volatile memory registers 24
14 Electromagnetic compatibility 27
14.1 Emission (CISPR 25) 27
14.1.1 Conducted radio disturbance 27
14.1.2 Radiated radio disturbance 27
14.2 Radiated disturbances (ISO 11452-1 third edition (2005-02), ISO 11452-2, ISO 11452-4 and ISO 11452-5) 27
14.2.1 Absorber lined shielded enclosure 27
14.2.2 Bulk-current injection 27
14.2.3 Strip line 27
14.2.4 Immunity against mobile phones 28
14.3 Electrical transient transmission by capacitive coupling [ISO 7637-3, second edition (2007-07)] 28
15 ElectroStatic Discharge (ESD) 28
15.1 Human body model (AEC-Q100-002) 28
15.2 Human metal model (ANSI/ESD SP5.6-2009) 29
15.3 Machine model (AEC-Q100-003) 29
15.4 Charged-device model (AEC-Q100-011) 29
16 Application information 29
17 Test information 30
17.1 Quality information 30
18 Marking 30
19 Package information 31
19.1 Reading point position 31
19.2 Terminals 31
20 Package outline 32
21 Handling information 33
22 Solderability information 33
23 Revision history 33
24 Legal information 34
24.1 Data sheet status 34
24.2 Definitions 34
24.3 Disclaimers 34
24.4 Trademarks 35
25 Contact information 35
26 Contents 36

Please be aware that important notices concerning this document and the product(s) described herein, have been included in section 'Legal information'.

© NXP B.V. 2013. All rights reserved.

For more information, please visit: http://www.nxp.com
For sales office addresses, please send an email to: salesaddresses@nxp.com

Date of release: 16 July 2013
Document identifier: KMA221