ELECTRONIC ATTENUATOR

KK3340

The KK3340 is a simple but very effective electronic attenuator. This device offers up to 80 dB of attenuation control for frequencies to 1.0 MHz. THD (distortion) is less than 1% - up to 15 dB attenuation and less that 3% - up to 40 dB.

Typical uses include instrumentation control, remote control audio amplifiers, electronic games, and CATV (cable TV) set-top converter audio control.

- Designed for use in:
  DC Operated Volume Control
  Compression and Expansion Amplifier Applications
- Controlled by DC Voltage or External Variable Resistor
- Economical 8-Pin Dual-In-Line Package

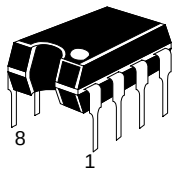

P SUFFIX
PLASTIC PACKAGE
CASE 626

PIN CONNECTIONS

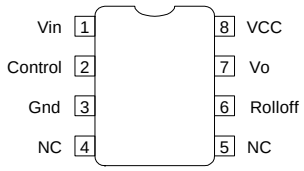

MAXIMUM RATINGS

(T_A = +25 ^{O}C, unless otherwise noted)

Rating	Symbol	Value	Unit
Power Supply Voltage	V_{CC}	20	Vdc
Power Dissipation @ (T_A = +25 ^{O}C); Derate above T_A = +25 ^{O}C	P_D	1.2 10	W mW/^{O}C
Operating Ambient Temperature Range	T_A	0 до +75	^{O}C

Figure 1. Typical DC Remote Volume Control

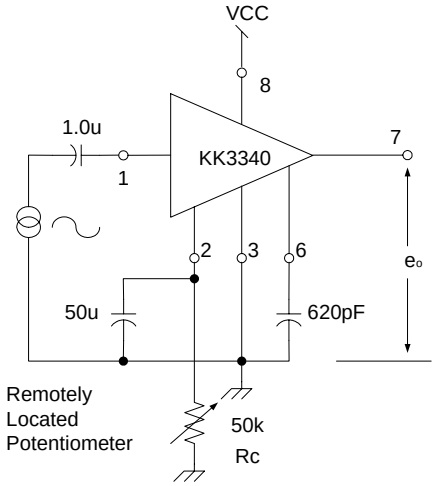

ELECTRICAL CHARACTERISTICS (e_{in} = 100 mVrms, f = 1.0 kHz, V_{CC} = 16 Vdc, T_A = +25 ^{O}C, unless otherwise noted)

Circuit	Characteristics	Min	Typ	Max	Unit
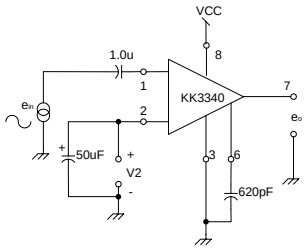	Operating Power Supply Voltage	0.8	-	18	Vdc
	Control Terminal Sink Current, Pin 2 (e_{in} = 0)	-	-	2.0	mAdc
	Maximum Input Voltage	-	-	0.5	Vrms
	Voltage Gain	11	13	-	dB
	Attenuation range from Maximum Gain (V2 = 6.5 Vdc)	70	80	-	dB
	Total Harmonic Distortion (Pin 2 Gnd) (e_{in} = 100 mVrms, $e_o = A_v * e_{in}$)	-	0.6	1.0	%
	Attenuation Point A_v = 20 dB	**4.44**	**4.68**	**4.92**	**Vdc**

Figure 2. Circuit Schematic

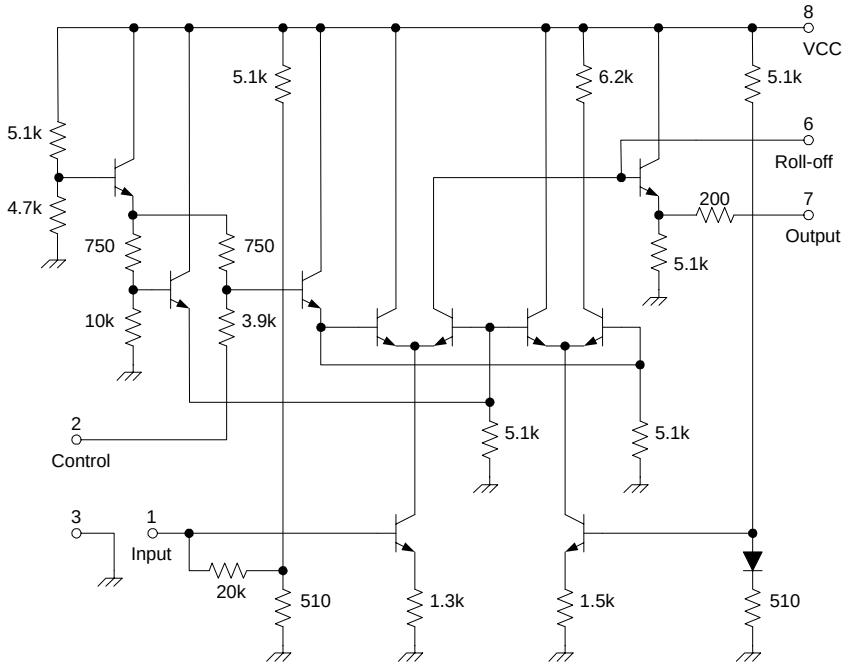

Figure 3. Attenuation versus DC Control Voltage

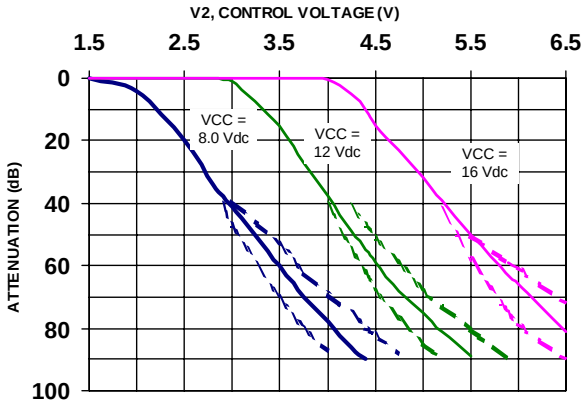

Figure 4. Attenuation versus Control Resistor

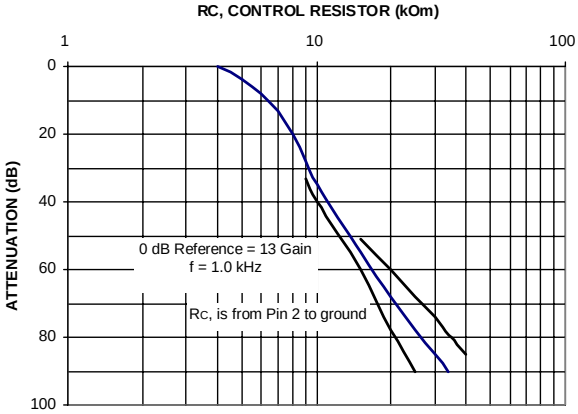

Figure5 . Frequency Response

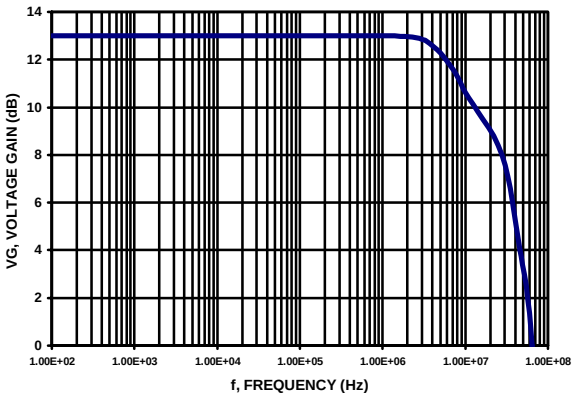

Figure 6. Output Voltage Swing

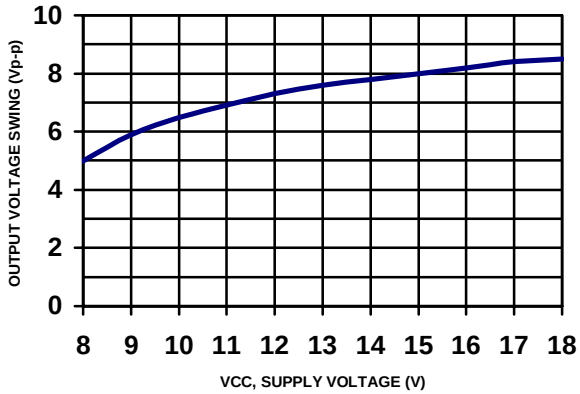

Figure 7. Total Harmonic Distortion

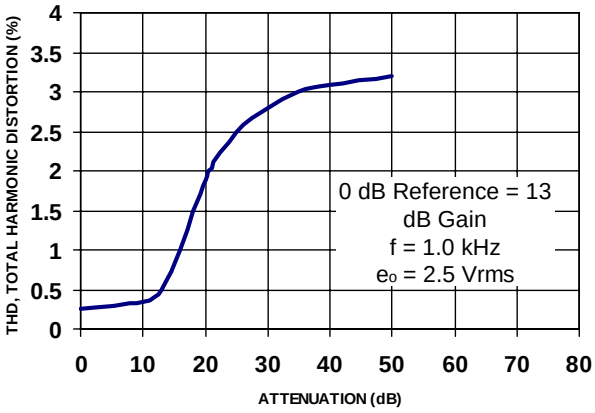

N SUFFIX PLASTIC DIP
(MS – 001BA)

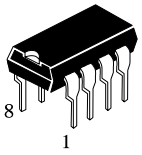

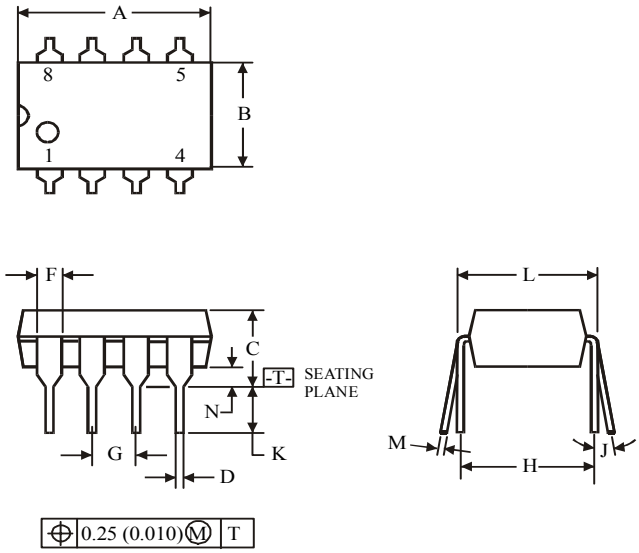

	Dimension, mm	
Symbol	MIN	MAX
A	8.51	10.16
B	6.1	7.11
C		5.33
D	0.36	0.56
F	1.14	1.78
G	2.54	
H	7.62	
J	0°	10°
K	2.92	3.81
L	7.62	8.26
M	0.2	0.36
N	0.38	

NOTES:

1. Dimensions “A”, “B” do not include mold flash or protrusions.
   Maximum mold flash or protrusions 0.25 mm (0.010) per side.

D SUFFIX SOIC
(MS - 012AA)

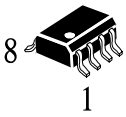

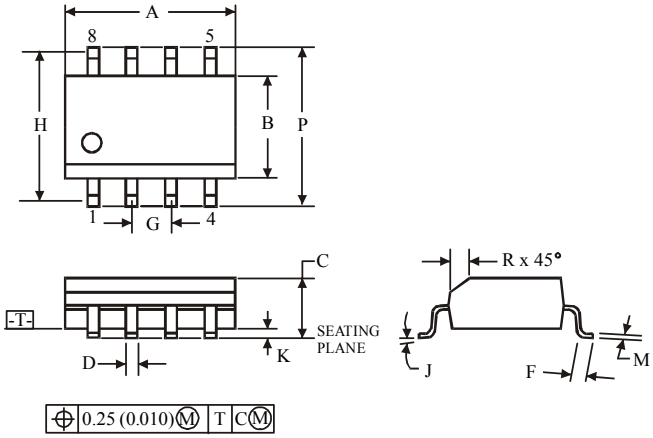

	Dimension, mm	
Symbol	MIN	MAX
A	4.8	5
B	3.8	4
C	1.35	1.75
D	0.33	0.51
F	0.4	1.27
G	1.27	
H	5.72	
J	0°	8°
K	0.1	0.25
M	0.19	0.25
P	5.8	6.2
R	0.25	0.5

NOTES:

1. Dimensions A and B do not include mold flash or protrusion.
2. Maximum mold flash or protrusion 0.15 mm (0.006) per side
   for A; for B – 0.25 mm (0.010) per side.