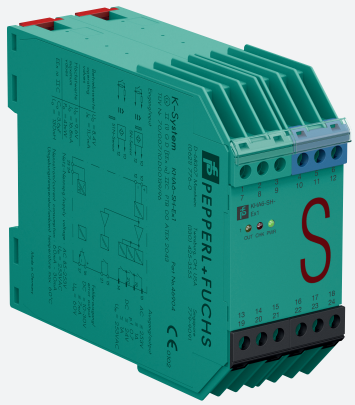

Switch Amplifier

KHA6-SH-Ex1

- 1-channel isolated barrier
- 115/230 V AC supply
- Input for approved dry contacts or SN/S1N sensors
- Relay contact output
- Fault indication output
- Line fault detection (LFD)
- Up to SIL 3 acc. to IEC/EN 61508
- Up to PL d acc. to EN/ISO 13849

SIL 3 PL d

Function

This isolated barrier is used for intrinsic safety applications.
The device transfers digital signals (SN/S1N proximity sensors or approved dry contacts) from a hazardous area to a safe area.
The input controls 1 relay contact output with 3 NO contacts (1 output is in series to the both output relays for the safety function), 1 relay contact output with 1 NO contact, and 1 passive transistor output (fault indication output).
Unlike an SN/S1N series proximity sensor, a mechanical contact requires a 10 kΩ resistor to be placed across the contact in addition to a 1.5 kΩ resistor in series.
Lead breakage (LB) and short circuit (SC) conditions of the control circuit are continuously monitored.
During an fault condition, the fault indication output energizes and outputs I and II de-energize.
For safety applications up to SIL 3, output I must be used. For safety applications up to SIL 2, output I and output II can be used.

Connection

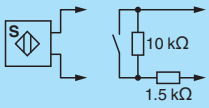

Zone 0, 1, 2
Div. 1, 2

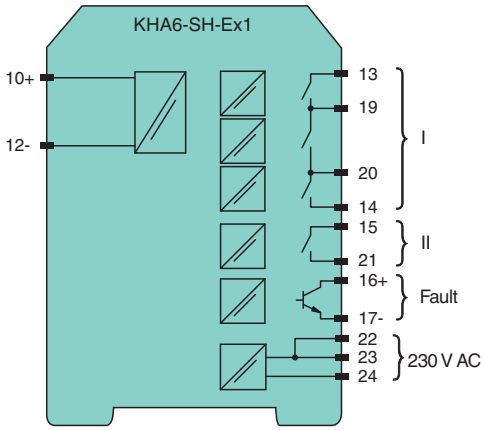

Technical Data

General specifications		
Signal type		Digital Input
Functional safety related parameters		
Safety Integrity Level (SIL)		SIL 3
Performance level (PL)		PL d
Supply		
Connection		terminals 22, 23, 24
Rated voltage	U_r	85 ... 253 V AC , 45 ... 65 Hz

Release date: 2021-12-20 Date of issue: 2021-12-20 Filename: 046904_eng.pdf

Technical Data

Rated current	I_r	30 mA ± 5 mA
Power dissipation		2.2 W
Power consumption		max. 2.3 W
Input		
Connection side		field side
Connection		terminals 10+, 12-
Open circuit voltage/short-circuit current		approx. 8.4 V DC / approx. 11.7 mA
Lead resistance		≤ 50 Ω, in hazardous area cable capacitances and inductivities are to be taken into account
Switching point		
Relay de-energized		I < 2.1 mA and I > 5.9 mA
Relay energized		2.8 mA < I < 5.3 mA
Response delay		≤ 1 ms
Output		
Connection side		control side
Connection		output I: terminals 13, 14 ; output II: terminals 15, 21 ; output III: terminals 16+, 17-
Output I		relay , signal
Contact loading		253 V AC/1 A/cos ϕ ≥ 0.7; 24 V DC/1 A resistive load
Mechanical life		50 x 10^6 switching cycles
Output II		relay , signal
Contact loading		253 V AC/1 A/cos ϕ ≥ 0.7; 24 V DC/1 A resistive load
Mechanical life		50 x 10^6 switching cycles
Output III		electronic output, passive , fault signal
Rated voltage		10 ... 30 V DC
Signal level		1-signal: (L+) -2.5 V (7 mA, short-circuit proof) / 0-signal: blocked output (Leakage current ≤ 10 µA)
Transfer characteristics		
Switching frequency		5 Hz
Indicators/settings		
Display elements		LEDs
Labeling		space for labeling at the front
Directive conformity		
Electromagnetic compatibility		
Directive 2014/30/EU		EN 61326-1:2013 (industrial locations)
Machinery Directive		
Directive 2006/42/EC		EN/ISO 13849-1:2015
Conformity		
Electromagnetic compatibility		NE 21:2011
Degree of protection		IEC 60529:2001
Safety		IEC/EN 61508:2010
Ambient conditions		
Ambient temperature		-20 ... 60 °C (-4 ... 140 °F)
Mechanical specifications		
Degree of protection		IP20
Connection		screw terminals
Mass		approx. 280 g
Dimensions		40 x 93 x 115 mm (1.6 x 3.7 x 4.5 inch) (W x H x D) , housing type E
Mounting		on 35 mm DIN mounting rail acc. to EN 60715:2001
Data for application in connection with hazardous areas		
EU-type examination certificate		PTB 00 ATEX 2043
Marking		⟨Ex⟩ II (1)GD [EEx ia] IIC [circuit(s) in zone 0/1/2]
Input		EEx ia IIC
Voltage	U_o	9.56 V
Current	I_o	16.8 mA

Release date: 2021-12-20 Date of issue: 2021-12-20 Filename: 046904_eng.pdf

Technical Data

Power	P_o	41 mW (linear characteristic)
Supply		
Maximum safe voltage	U_m	253 V AC/DC (Attention! The rated voltage can be lower.)
Output		
Contact loading		253 V AC/1 A/cos ϕ ≥ 0.7; 24 V DC/1 A resistive load
Maximum safe voltage	U_m	output I/output II: 253 V AC/DC (Attention! U_m is no rated voltage.)
Galvanic isolation		
Input/Output		safe electrical isolation acc. to IEC/EN 60079-11, voltage peak value 375 V
Input/power supply		safe electrical isolation acc. to IEC/EN 60079-11, voltage peak value 375 V
Directive conformity		
Directive 2014/34/EU		EN 60079-0:2012+A11:2013 , EN 60079-11:2012
General information		
Supplementary information		Observe the certificates, declarations of conformity, instruction manuals, and manuals where applicable. For information see www.pepperl-fuchs.com.

Assembly

Front view

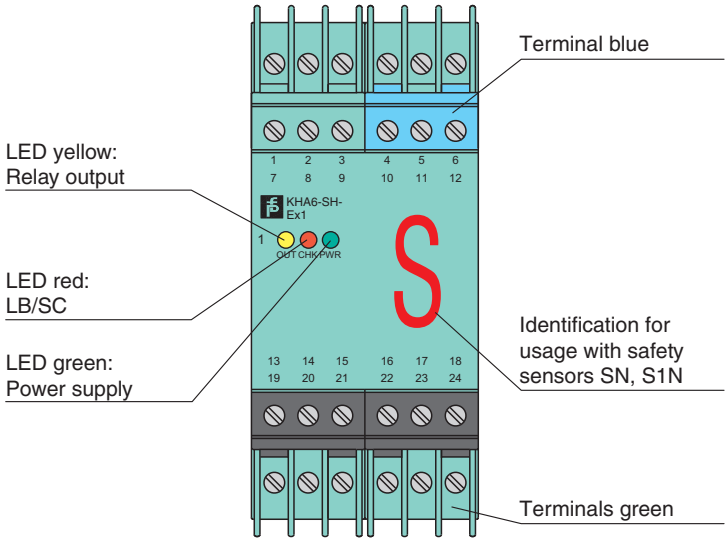

Matching System Components

	**K-DUCT-BU**	Profile rail, wiring comb field side, blue

Accessories

	**KF-ST-5GN**	Terminal block for KF modules, 3-pin screw terminal, green
	**KF-ST-5BU**	Terminal block for KF modules, 3-pin screw terminal, blue

Release date: 2021-12-20 Date of issue: 2021-12-20 Filename: 046904_eng.pdf

Accessories

	**KF-CP**	Red coding pins, packaging unit: 20 x 6

Release date: 2021-12-20 Date of issue: 2021-12-20 Filename: 046904_eng.pdf

Application

The input (terminals 10, 12) may generally be operated only with **potentially free** (passive) switches.

Single channel operations up to SIL3 **must** occur via terminals 13 and 14. The center tap of the contacts (terminals 19, 20) can **also** be used if an operation is to occur a redundant branch.

If the device is used for safety operations the information in the test documents should be observed. The output III error message delivers a "1"-signal when the control circuit experiences lead breakage (LB) or a short circuit (LK).

The device (housing type E) has integrated terminals.

Characteristic Curve

Maximal switching power of the output

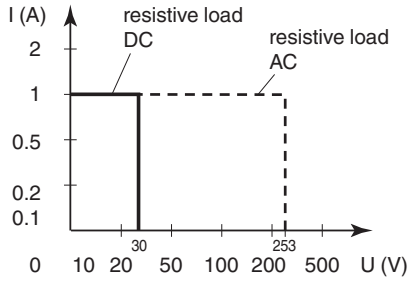

Release date: 2021-12-20 Date of issue: 2021-12-20 Filename: 046904_eng.pdf