KFF6169A

800 MHz Duplexer

Rev 1 – Origin Date: July 11, 2005 – Revision Date: March 3, 2006

Features

- Excellent Power Handling
- Low Loss
- High Rejection

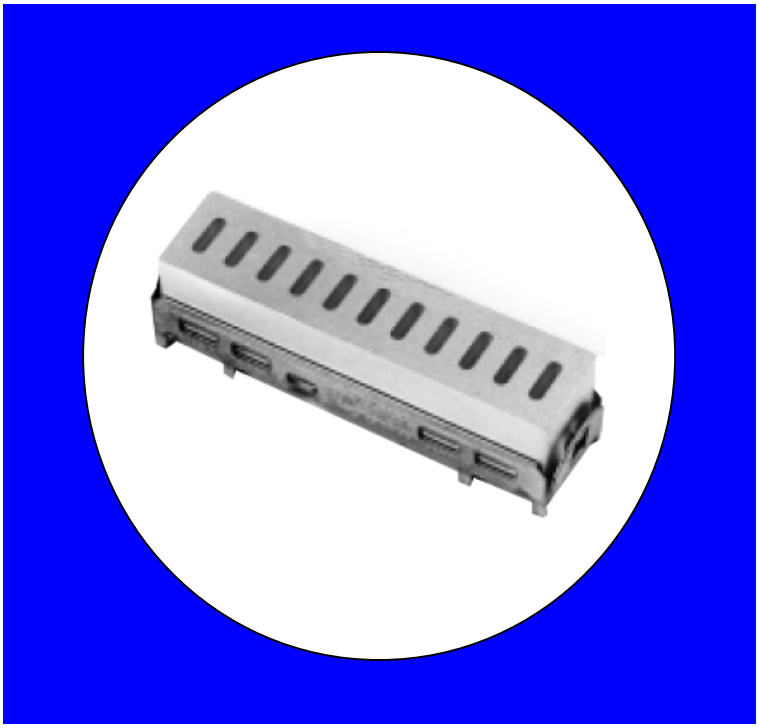

Description

Pin Mount, silver (Ag) coated ceramic filter. Developed for use in 800 MHz infrastructure applications.

Weight: 49.0 grams typical

Material: Filter is composed of a ceramic block plated with Ag. and a bracket made of 60-40 tin lead plated cold roll steel.

Electrical Specifications

Parameter	Frequency (MHz)	Typical @ 25ºC	Spec. @ 25ºC
TX to Antenna Response			
Passband Insertion Loss	804-824	2.1 dB	2.5 dB max
Passband Return Loss @ TX	804-824	12.0 dB	9.0 dB min
Attenuation:	850-870	53.0 dB	50 dB min
Antenna to RX Response			
Passband Insertion Loss	850-870	2.2 dB	2.5 dB max
Passband Return Loss @ RX	850-870	8.3 dB	6.0 dB min
Attenuation:	804-824	58.0 dB	50.0 dB min
Power into any port		5 Watt max	

Note: Supplier shall test each filter to the critical electrical specifications of the above table. Any subsequent audits may deviate from in value due to measurement repeatability among different test systems. Such deviations shall not exceed the following limits:

Specification	Allowance
Insertion Loss	0.1 dB
Return Loss	1.0 dB
Stopbands	1.0 dB

•"This product is covered by one or more of the following U.S. and foreign patents including: US 4,692,726;US 4,742,562; US 4,800,348;US 4,829,274;US 5,146,193;EP 0573597;DE 0573597;FR 0573597;JP 508149/92;KR 142171;US 5,162,760;US 5,218,329;US 5,250,916;US 5,327,109;US 5,488,335;CA 2114029;FR 9306297;GB 2273393;JP 3205337;KR 115113;CN 93106228.4;US 5,512,866;EP 0706719;DE 0706719;FR 0706719;GB 0706719;CN 95190359.4;US 5,602,518;US 5,721,520;US 5,745,018;EP 0910875;DE 0910875;DK 0910875;FR 0910875;GB 0910875;IE 0910875;JP 505182/98;KR 10-323013;US 5,994,978;US 6,462,629;CN 00810420.4;US 6,559,735;US 6,650,202;US 6,834,429.Other US and foreign patents pending.

•CTS Corporation 2006 reserves all copyrights in the layout, design and configuration of the patterns on this product."

Mechanical Drawing

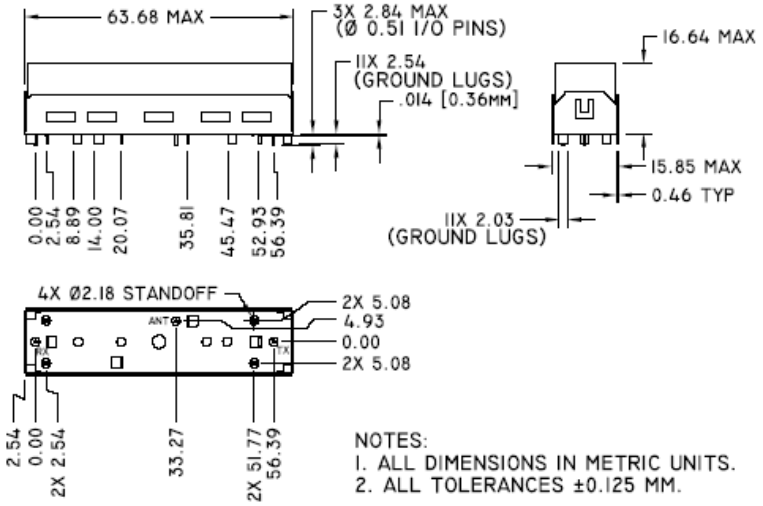

Electrical response

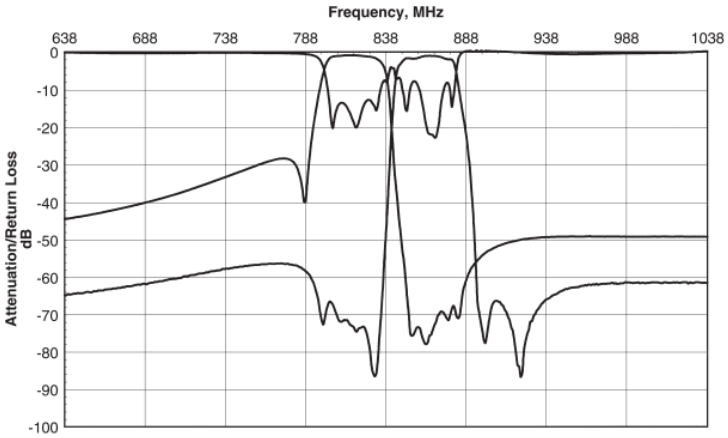

PCB Layout

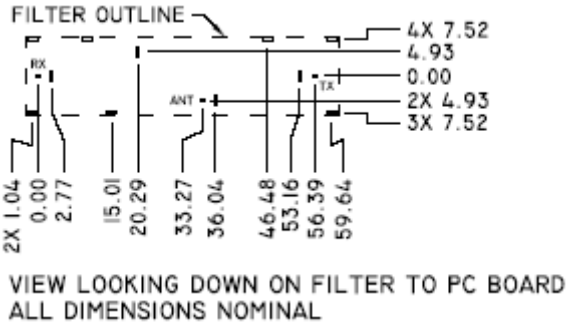

Packaging and Marking

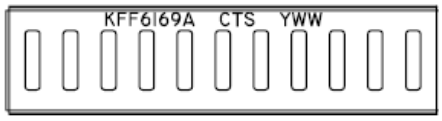

Customer Feed Direction

This product is shipped in pre-formed foam trays.

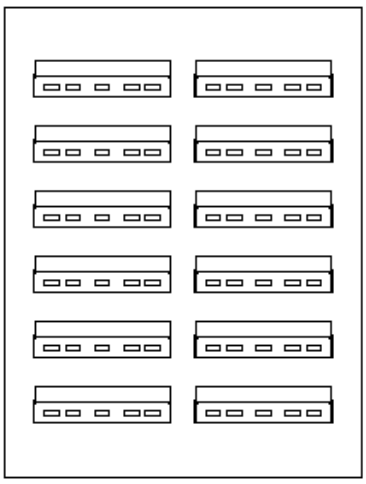

6 12 Slot Foam Trays

(72 max. per box)