Band pass filters for the receiving RF circuits of transceiver

- High stability and reliability with good performance and no adjustment.
- Wide and sharp pass band characteristics.
- Low insertion loss and deep stop band attenuation for interference.
- Terminating Impedance : 50Ω//0pF

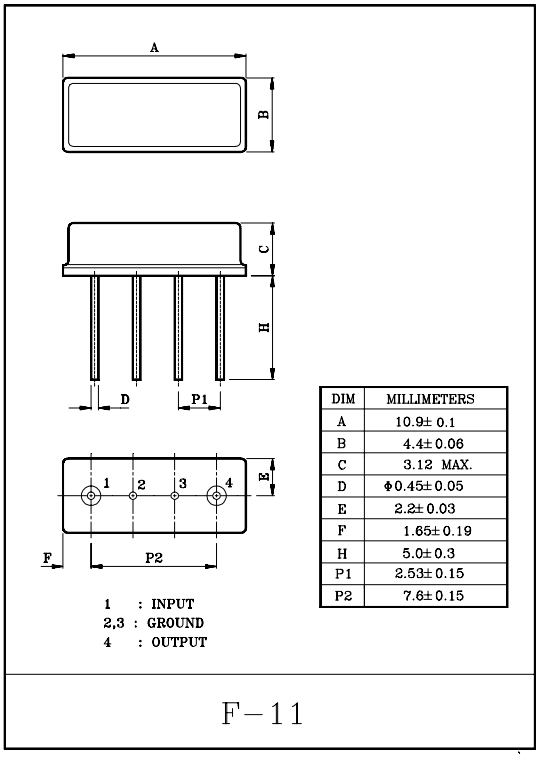

DIM	MILLIMETERS
A	10.9± 0.1
B	4.4± 0.06
C	3.12 MAX.
D	Φ0.45± 0.05
E	2.2± 0.03
F	1.65± 0.19
H	5.0± 0.3
P1	2.53± 0.15
P2	7.6± 0.15

MAXIMUM RATINGS (Ta=25℃)

ITEM	SYMBOL	RATING	UNIT
Input Signal Level	IS_{max}	0	dBm
DC Permissive Voltage	V_{DC}	+10	V
Operating Temperature Range	T_{opr}	-20～+60	℃
Storage Temperature Range	T_{stg}	-30～+85	℃

MARKING (F-11)

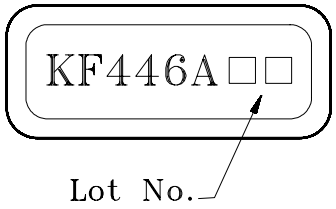

ELECTRICAL CHARACTERISTICS (Temperature 20±2℃, Humidity 65±5%)

ITEMS	SYMBOL	TEST CONDITION	MIN.	TYP.	MAX.	UNIT
Nominal Center Frequency	fo	-	-	446	-	MHz
Bandwidth	BW_{3dB}	-	f_O±2.0	-	-	MHz
Insertion Loss	IL_{PASS}	f_O±2.0MHz	-	-	4.0	dB
Ripple Level	A_{RIP}	f_O±2.0MHz	-	-	2.0	dB
Rejection Level	IL_{STOP}	f_O-100～f_O-80MHz	55	-	-	dB
		f_O+80～f_O+100MHz	45	-	-	dB
Input/Output Impedance	$Z_I(Z_O)$	-	-	50Ω//0pF	-	-

TEST CIRCUIT

REFERENCE LEVEL TEST CIRCUIT

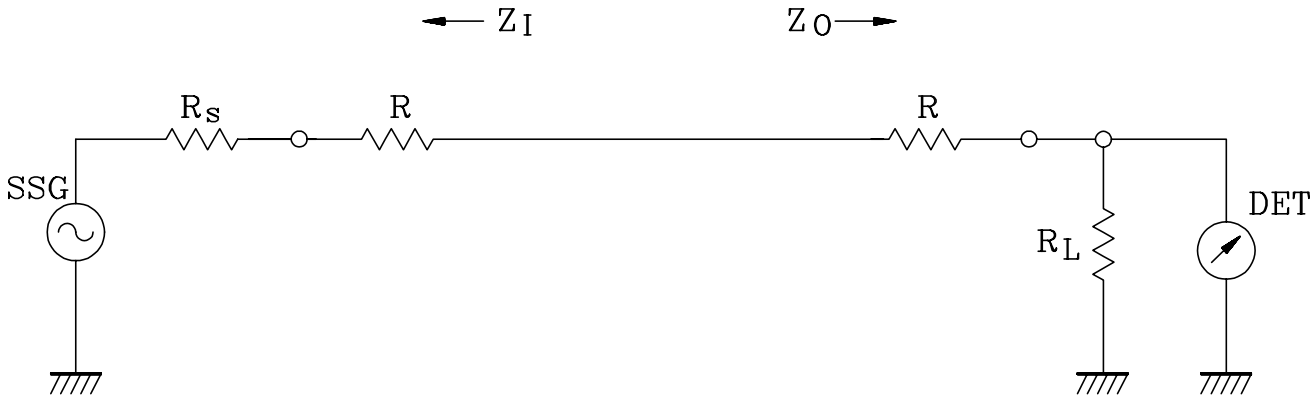

R_S, R_L : 50Ω (Internal Impedance of Source and Load)
R : 0Ω
$Z_I(Z_O)=R_S(R_L)+R$

MEASUREMENT CIRCUIT

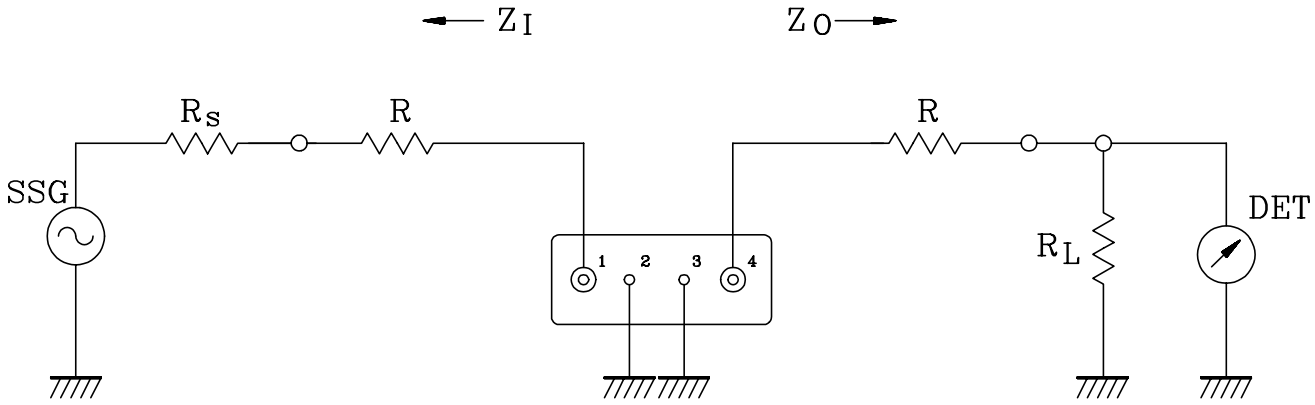

1: Input 2,3: Ground 4: Output

R_S, R_L : 50Ω (Internal Impedance of Source and Load)
R : 0Ω
$Z_I(Z_O)=R_S(R_L)+R$