KF10N60PR/FR

N CHANNEL MOS FIELD EFFECT TRANSISTOR

General Description

This planar stripe MOSFET has better characteristics, such as fast switching time, low on resistance, fast reverse recovery time, low gate charge and excellent avalanche characteristics. It is mainly suitable for active power factor correction and switching mode power supplies.

FEATURES

- V_{DSS}=600V, I_D=10A
- Drain-Source ON Resistance :
  $R_{DS(ON)}$(Max)=0.69 Ω @V_{GS}=10V
- Qg(typ.)= 29.5nC
- t_{rr}(typ.)=150nS

MAXIMUM RATING (Tc=25℃)

CHARACTERISTIC		SYMBOL	RATING		UNIT
			KF10N60PR	KF10N60FR	
Drain-Source Voltage		V_{DSS}	600		V
Gate-Source Voltage		V_{GSS}	±30		V
Drain Current	@T_C=25℃	I_D	10	10*	A
	@T_C=100℃		6	6*	
	Pulsed (Note1)	I_{DP}	25	25*	
Single Pulsed Avalanche Energy (Note 2)		E_{AS}	400		mJ
Repetitive Avalanche Energy (Note 1)		E_{AR}	16.5		mJ
Peak Diode Recovery dv/dt (Note 3)		dv/dt	4.5		V/ns
Drain Power Dissipation	Tc=25℃	P_D	190	50	W
	Derate above 25℃		1.52	0.4	W/℃
Maximum Junction Temperature		T_j	150		℃
Storage Temperature Range		T_{stg}	-55 ~ 150		℃
Thermal Characteristics					
Thermal Resistance, Junction-to-Case		R_{thJC}	0.65	2.5	℃/W
Thermal Resistance, Junction-to-Ambient		R_{thJA}	62.5	62.5	℃/W

* : Drain current limited by maximum junction temperature.

PIN CONNECTION

(KF10N60PR, KF10N60FR)

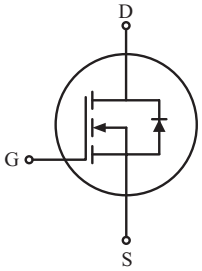

KF10N60PR

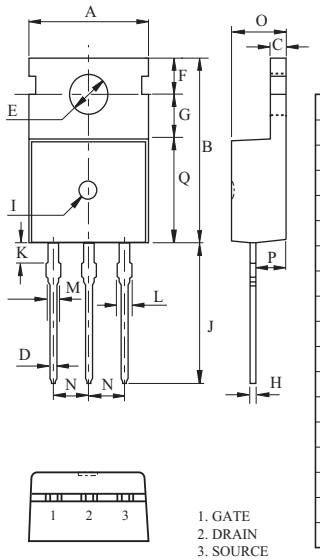

DIM	MILLIMETERS
A	9.9 ± 0.2
B	15.95 MAX
C	1.3+0.1/-0.05
D	0.8 ± 0.1
E	ø3.6 ± 0.2
F	2.8 ± 0.1
G	3.7
H	0.5+0.1/-0.05
I	ø1.5
J	13.08 ± 0.3
K	1.46
L	1.4 ± 0.1
M	1.27 ± 0.1
N	2.54 ± 0.2
O	4.5 ± 0.2
P	2.4 ± 0.2
Q	9.2 ± 0.2

TO-220AB

KF10N60FR

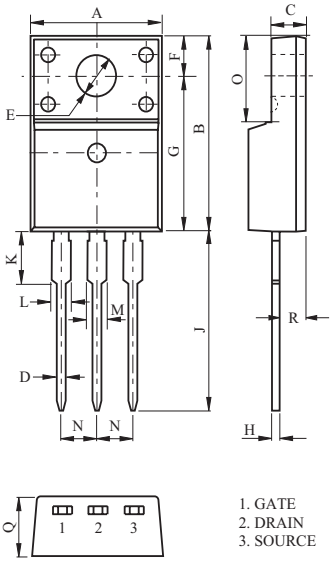

DIM	MILLIMETERS
A	10.16 ± 0.2
B	15.87 ± 0.2
C	2.54 ± 0.2
D	0.8 ± 0.1
E	ø3.18 ± 0.1
F	3.3 ± 0.1
G	12.57 ± 0.2
H	0.5 ± 0.1
J	13.0 ± 0.5
K	3.23 ± 0.1
L	1.47 MAX
M	1.47 MAX
N	2.54 ± 0.2
O	6.68 ± 0.2
Q	4.7 ± 0.2
R	2.76 ± 0.2

TO-220IS (1)

ELECTRICAL CHARACTERISTICS (Tc=25℃)

CHARACTERISTIC	SYMBOL	TEST CONDITION	MIN.	TYP.	MAX.	UNIT
Static						
Drain-Source Breakdown Voltage	BV_{DSS}	I_D=250㎂, V_{GS}=0V	600	-	-	V
Breakdown Voltage Temperature Coefficient	$\Delta BV_{DSS}/\Delta T_j$	I_D=250㎂, Referenced to 25℃	-	0.6	-	V/℃
Drain Cut-off Current	I_{DSS}	V_{DS}=600V, V_{GS}=0V	-	-	10	㎂
Gate Threshold Voltage	V_{th}	V_{DS}=V_{GS}, I_D=250㎂	2	-	4	V
Gate Leakage Current	I_{GSS}	V_{GS}=±30V, V_{DS}=0V	-	-	±100	nA
Drain-Source ON Resistance	$R_{DS(ON)}$	V_{GS}=10V, I_D=5A	-	0.59	0.69	Ω
Dynamic						
Total Gate Charge	Q_g	V_{DS}=480V, I_D=10A V_{GS}=10V (Note4,5)	-	29.5	-	nC
Gate-Source Charge	Q_{gs}		-	6.5	-	
Gate-Drain Charge	Q_{gd}		-	12.5	-	
Turn-on Delay time	$t_{d(on)}$	V_{DD}=300V I_D=10A R_G=25 Ω (Note4,5)	-	32	-	ns
Turn-on Rise time	t_r		-	35	-	
Turn-off Delay time	$t_{d(off)}$		-	88	-	
Turn-off Fall time	t_f		-	30.5	-	
Input Capacitance	C_{iss}	V_{DS}=25V, V_{GS}=0V, f=1.0MHz	-	1255	-	pF
Output Capacitance	C_{oss}		-	160	-	
Reverse Transfer Capacitance	C_{rss}		-	16.5	-	
Source-Drain Diode Ratings						
Continuous Source Current	I_S	V_{GS}<V_{th}	-	-	10	A
Pulsed Source Current	I_{SP}		-	-	40	
Diode Forward Voltage	V_{SD}	I_S=10A, V_{GS}=0V	-	-	1.4	V
Reverse Recovery Time	t_{rr}	I_S=10A, V_{GS}=0V, dIs/dt=100A/㎲	-	150	-	ns
Reverse Recovery Charge	Q_{rr}		-	1.0	-	㎌

Note 1) Repetivity rating : Pulse width limited by junction temperature.

Note 2) L =7.3mH, I_S=10A, V_{DD}=50V, R_G=25 Ω, Starting T_j=25℃.

Note 3) $I_S \leq$10A, dI/dt≤200A/㎲, $V_{DD} \leq BV_{DSS}$, Starting T_j=25℃.

Note 4) Pulse Test : Pulse width ≤ 300㎲, Duty Cycle ≤ 2%.

Note 5) Essentially independent of operating temperature.

Marking

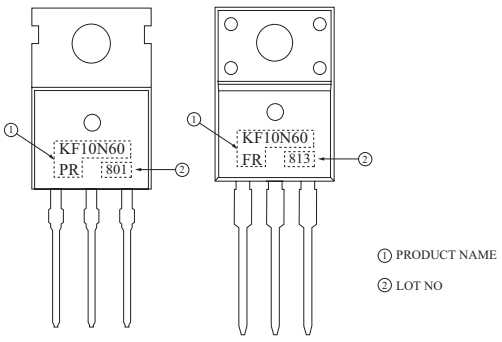

Fig1. I_D - V_{DS}

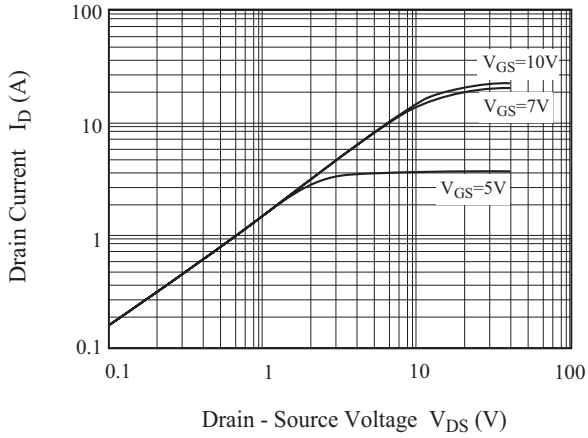

Fig2. I_D - V_{GS}

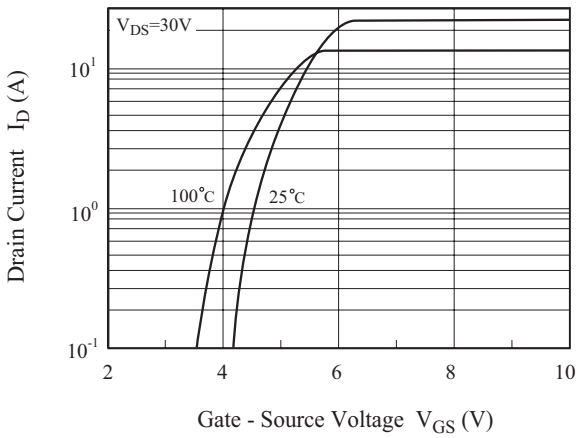

Fig3. BV_{DSS} - T_j

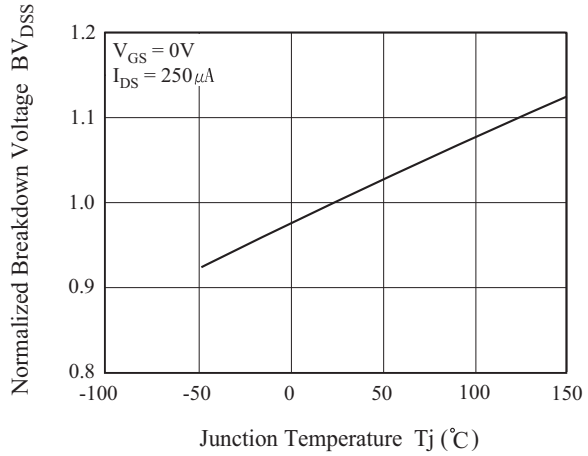

Fig4. $R_{DS(ON)}$ - I_D

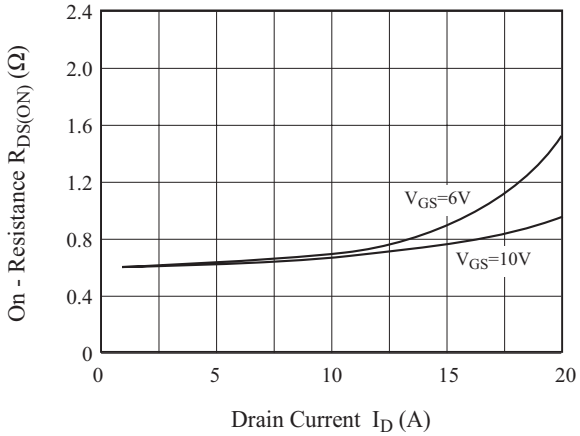

Fig5. I_S - V_{SD}

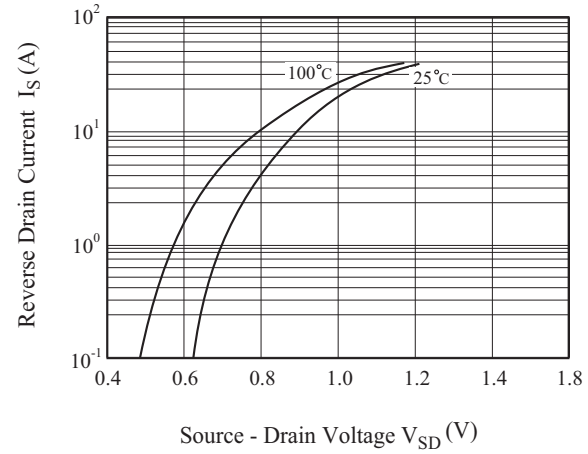

Fig6. $R_{DS(ON)}$ - T_j

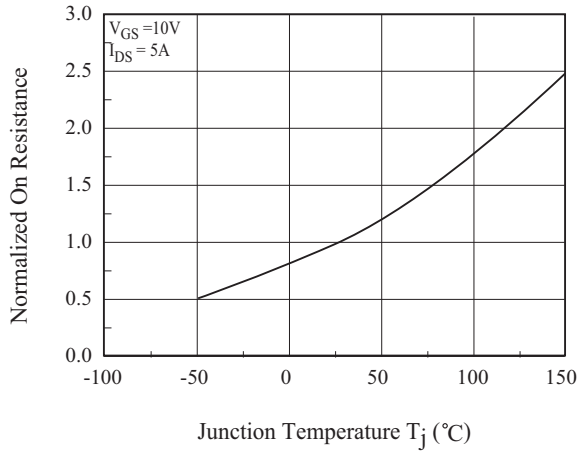

Fig 7. C - V_{DS}

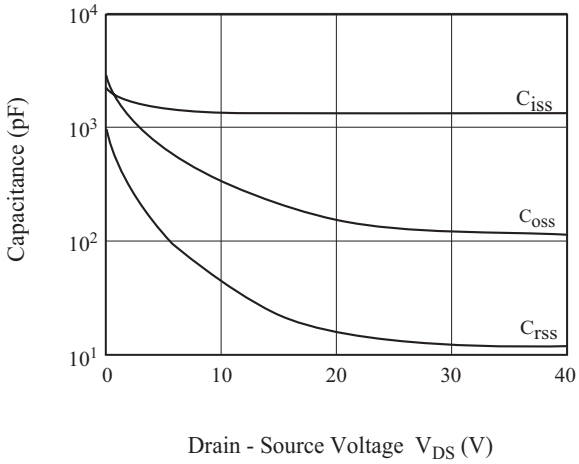

Fig8. Q_g- V_{GS}

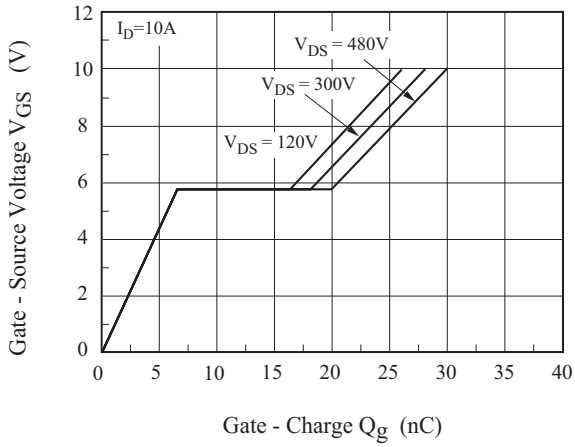

Fig9. Safe Operation Area

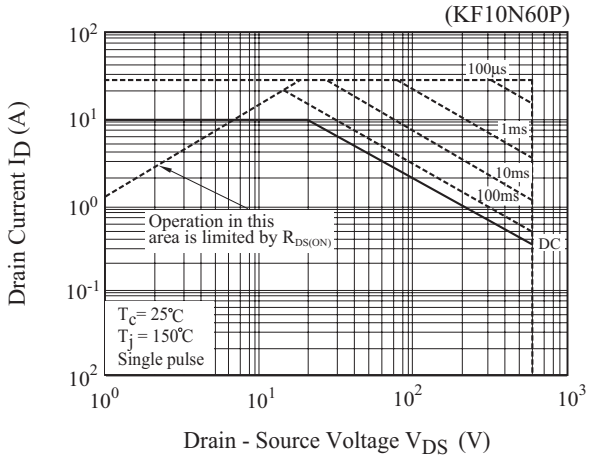

Fig10. Safe Operation Area

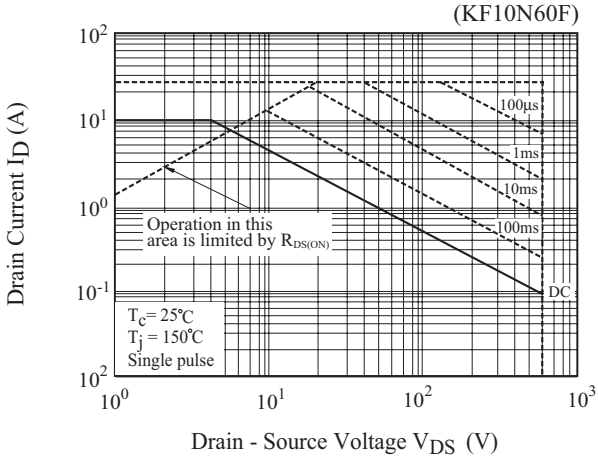

Fig11. I_D - T_j

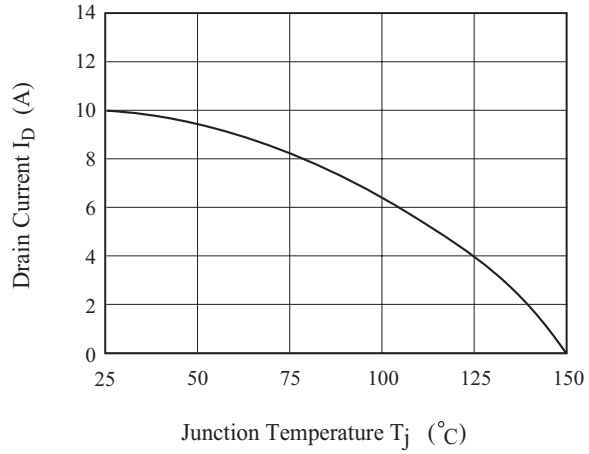

Fig12. Transient Thermal Response Curve

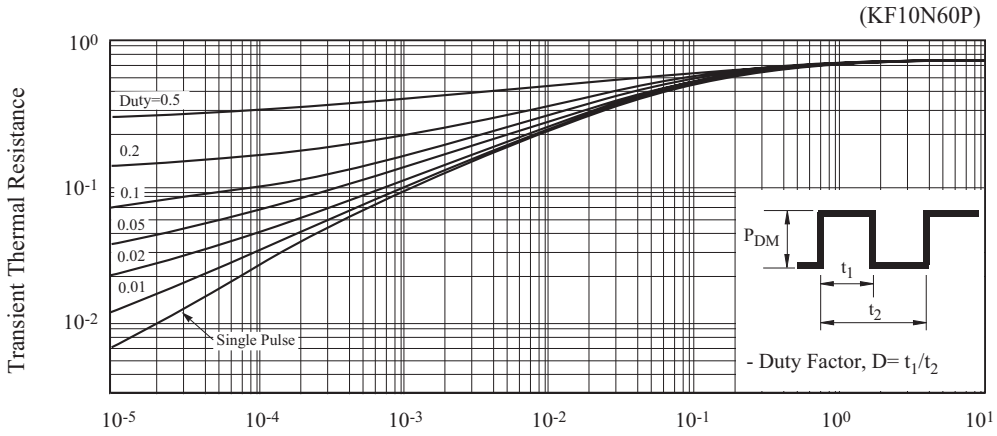

Fig13. Transient Thermal Response Curve

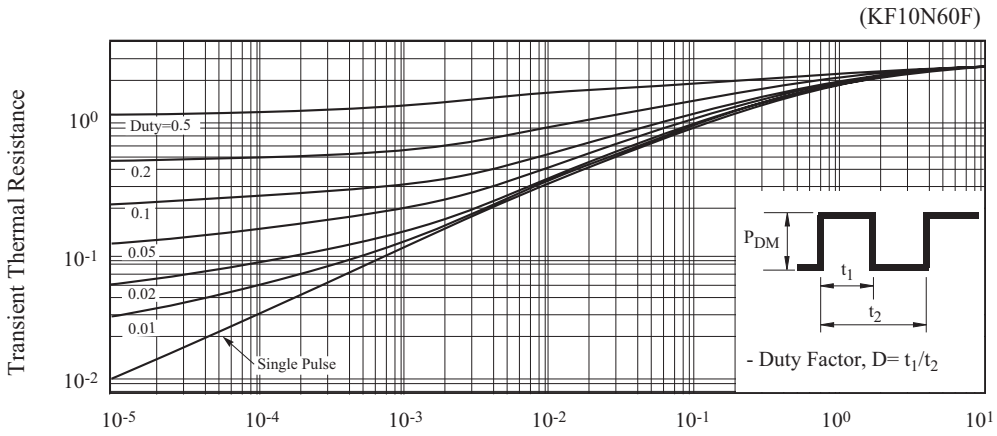

Fig14. Gate Charge

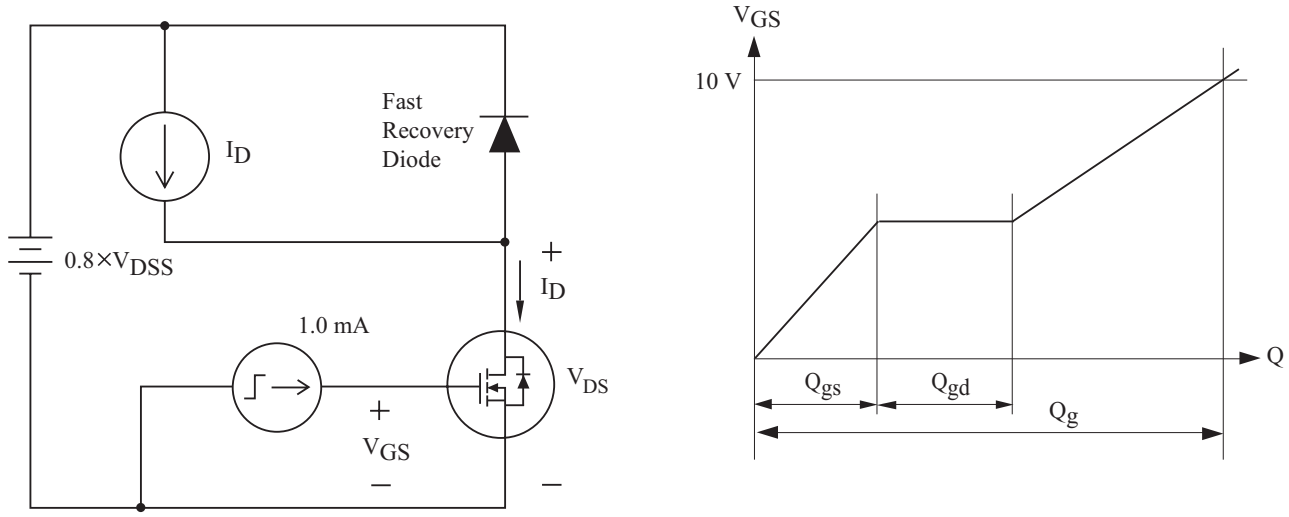

Fig15. Single Pulsed Avalanche Energy

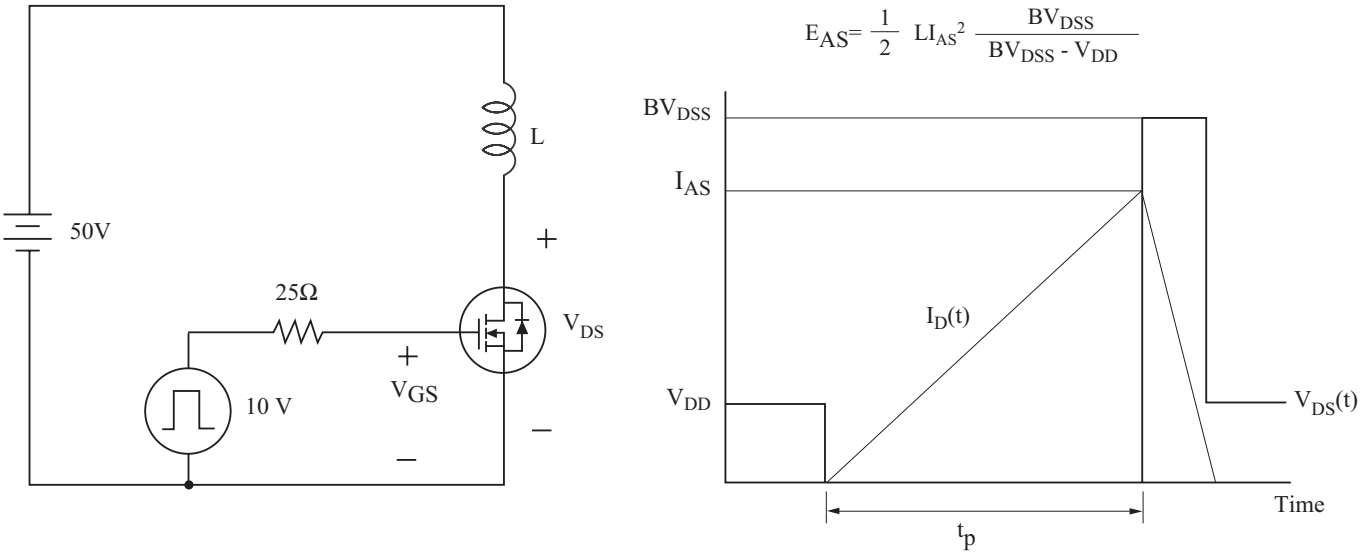

Fig16. Resistive Load Switching

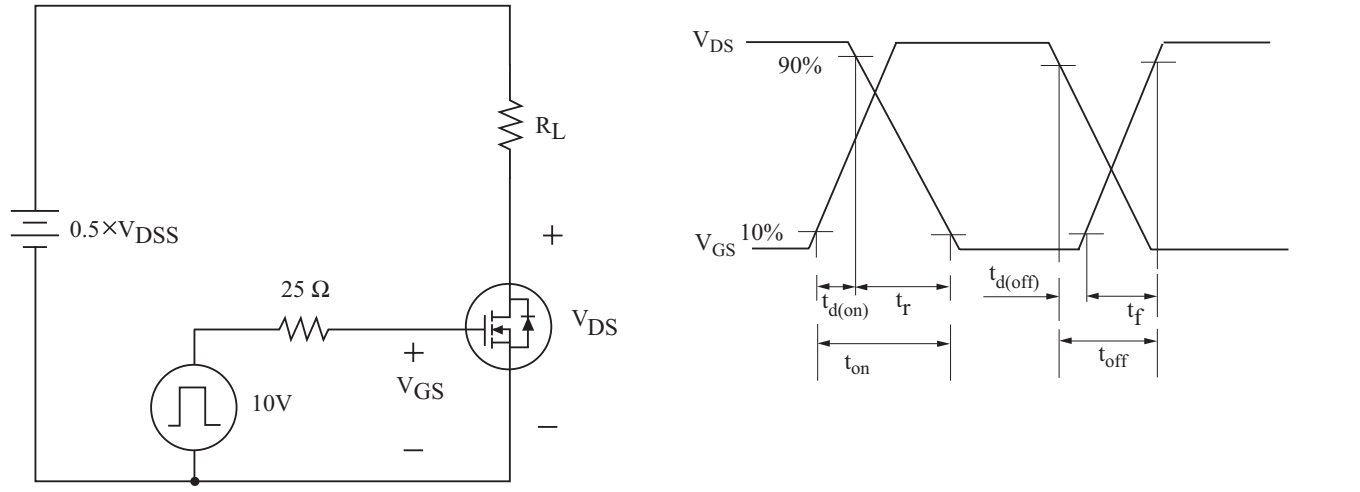

Fig17. Source - Drain Diode Reverse Recovery and dv /dt

