Plug-in Signal Conditioners K-UNIT

VAR TRANSDUCER

(self-powered)

Functions & Features

• Providing a DC output signal in proportion to AC reactive power
• DC output containing little ripple is ideal for computer input
• "Time division multiplication" method accepts distorted waveforms
• Isolation up to 2000 V AC
• High-density mounting
• No auxiliary power source required

Typical Applications

• Centralized monitoring and control of power management system in a manufacturing facility or building

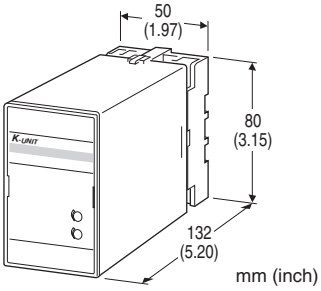

MODEL: KERPN-1[1][2][3][4]

ORDERING INFORMATION

• Code number: KERPN-1[1][2][3][4]
Specify a code from below for each of [1] through [4].
(e.g. KERPN-11PA/Q)
• Calibration range (e.g. lag 1000 – 0 – lead 1000 var)
• VT ratio, CT ratio (e.g. VT 3300 / 110 V, CT 250 / 5 A)
• Special output range (For codes Z & 0)
• Specify the specification for option code /Q
(e.g. /C01/S01)

CONFIGURATION

1: 3-phase / 3-wire

[1] INPUT (unbalanced load)

(Voltage must be balanced.)
1: 110 V / 5 A AC
2: 110 V / 1 A AC
3: 220 V / 1 A AC
4: 220 V / 5 A AC

[2] OUTPUT SIGNAL POLARITY

P: Negative in lag, positive in lead
M: Negative in lead, positive in lag

[3] OUTPUT

Current
A: 4 – 20 mA DC (Load resistance 600 Ω max.)
B: 2 – 10 mA DC (Load resistance 1200 Ω max.)
C: 1 – 5 mA DC (Load resistance 2400 Ω max.)
D: 0 – 20 mA DC (Load resistance 600 Ω max.)
E: 0 – 16 mA DC (Load resistance 750 Ω max.)
F: 0 – 10 mA DC (Load resistance 1200 Ω max.)
G: 0 – 1 mA DC (Load resistance 12 kΩ max.)
GW: -1 – +1 mA DC (Load resistance 10 kΩ max.)
Z: Specify current (See OUTPUT SPECIFICATIONS)
Voltage
1: 0 – 10 mV DC (Load resistance 10 kΩ min.)
2: 0 – 100 mV DC (Load resistance 100 kΩ min.)
3: 0 – 1 V DC (Load resistance 1000 Ω min.)
4: 0 – 10 V DC (Load resistance 10 kΩ min.)
5: 0 – 5 V DC (Load resistance 5000 Ω min.)
6: 1 – 5 V DC (Load resistance 5000 Ω min.)
1W: -10 – +10 mV DC (Load resistance 10 kΩ min.)
2W: -100 – +100 mV DC (Load resistance 100 kΩ min.)
3W: -1 – +1 V DC (Load resistance 1000 Ω min.)
4W: -10 – +10 V DC (Load resistance 10 kΩ min.)
5W: -5 – +5 V DC (Load resistance 5000 Ω min.)
0: Specify voltage (See OUTPUT SPECIFICATIONS)

[4] OPTIONS

blank: none
/Q: With options (specify the specification)

SPECIFICATIONS OF OPTION: Q (multiple selections)

COATING (For the detail, refer to M-System's web site.)
/C01: Silicone coating
/C02: Polyurethane coating
/C03: Rubber coating
TERMINAL SCREW MATERIAL
/S01: Stainless steel

GENERAL SPECIFICATIONS

Construction: Plug-in
Connection: M3.5 screw terminals
Screw terminal: Chromated steel (standard) or stainless steel
Housing material: Flame-resistant resin (black)
Isolation: Voltage input to current input to output
Computation: Time division multiplication
Overrange output: Approx. -10 to +120 % at 1 – 5 V

Zero adjustment: -5 to +5 % (front)
Span adjustment: 95 to 105 % (front)

INPUT SPECIFICATIONS

Frequency: 50 or 60 Hz
• **Voltage Input**
Operational range: 85 – 110 % of rating
Overload capacity: 150 % of rating for 10 sec., 110 % continuous
• **Current Input**
Operational range: 0 – 120 % of rating
Overload capacity: 1000 % of rating for 3 sec., 200 % for 10 sec., 120 % continuous

■ **How To Determine Var Range**

Calibration Range [var] = (Measuring Range) ÷ ((VT Ratio) × (CT Ratio))
Check that the required calibration range is within the available range in the table.
[example]
3-phase / 3-wire, measuring range 75 kvar,
VT 220 / 110 V, CT 250 / 5 A
$(75 \times 10^3$ [var])÷((220 ÷ 110) × (250 ÷ 5))= 750 [var]

■ **INPUT RANGE**

• **3-phase / 3-wire**

INPUT		AVAILABLE RANGE	BURDEN (VA)	
	STD.RANGE		VOLT.	CURR.
110V/1A	200 var	100 – 240 var	P_1: 2.5 P_3: 0.2	0.1/ph
110V/5A	1000 var	500 – 1200 var		0.5/ph
220V/1A	400 var	200 – 480 var	P_1: 2.5 P_3: 0.4	0.1/ph
220V/5A	2000 var	1000 – 2400 var		0.5/ph

OUTPUT SPECIFICATIONS

■ **DC Current**: 0 – 20 mA DC and ± 1 mA
Minimum span: 1 mA
Offset: Max. 1.5 times span
Load resistance: Output drive 12 V max.
■ **DC Voltage**: -10 – +12 V DC
Minimum span: 5 mV
Offset: Max. 1.5 times span
Load resistance: Output drive 1 mA max. at ≥ 0.5 V

■ **OPERATION DIAGRAM (example)**

• **Negative in lag, positive in lead**

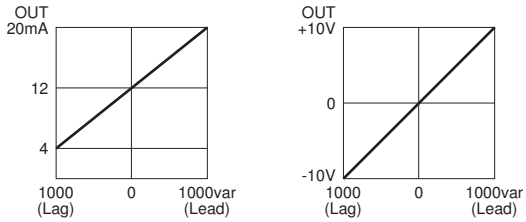

• **Negative in lead, positive in lag**

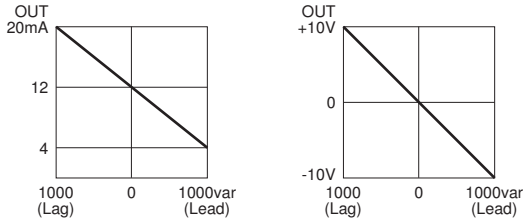

INSTALLATION

Operating temperature: -10 to +55°C (14 to 131°F)
Operating humidity: 30 to 85 %RH (non-condensing)
Mounting: Surface or DIN rail
Weight: 450 g (0.99 lb)

PERFORMANCE in percentage of span

Accuracy: ±0.5 % (at 23°C ±10°C or 73.4°F ±18°F, 45 – 65 Hz)
Response time: ≤ 2 sec. (0 – 100 % ±1 %)
Ripple: 0.5 %p-p max.
Insulation resistance: ≥ 100 MΩ with 500 V DC
Dielectric strength: 2000 V AC @ 1 minute (voltage input to current input to output to ground)
Impulse withstand voltage: 1.2 / 50 µsec., ±5 kV (input to output or ground)

CONNECTION DIAGRAM

■ **3-PHASE/3-WIRE**

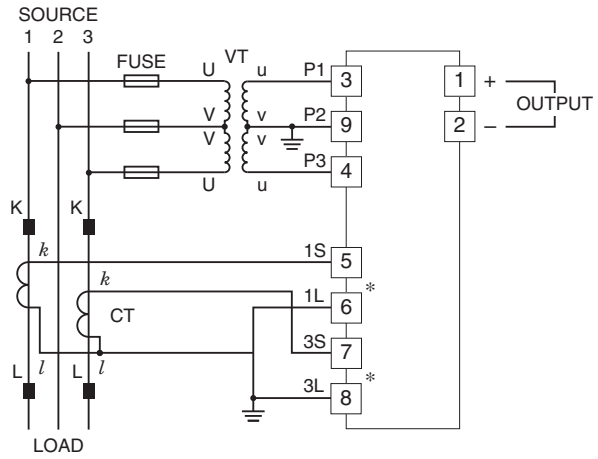

*CT Protector (model: CTM) attached to these terminals.

EXTERNAL DIMENSIONS unit: mm (inch)

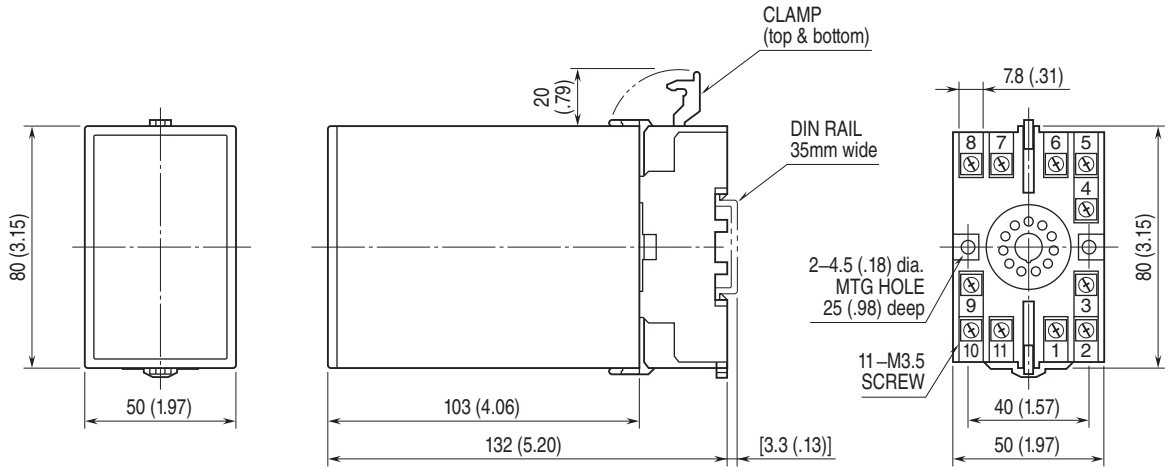

• When mounting, no extra space is needed between units.

TERMINAL ASSIGNMENTS unit: mm (inch)

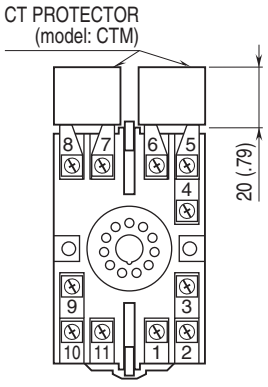

⚠ Specifications are subject to change without notice.