BI-DIRECTIONAL COUPLER
CONNECTORIZED MODEL: KDK-744S

WIDE BANDWIDTH — 10 - 1000 MHz

FEATURES:

- High Directivity
- Low Insertion Loss



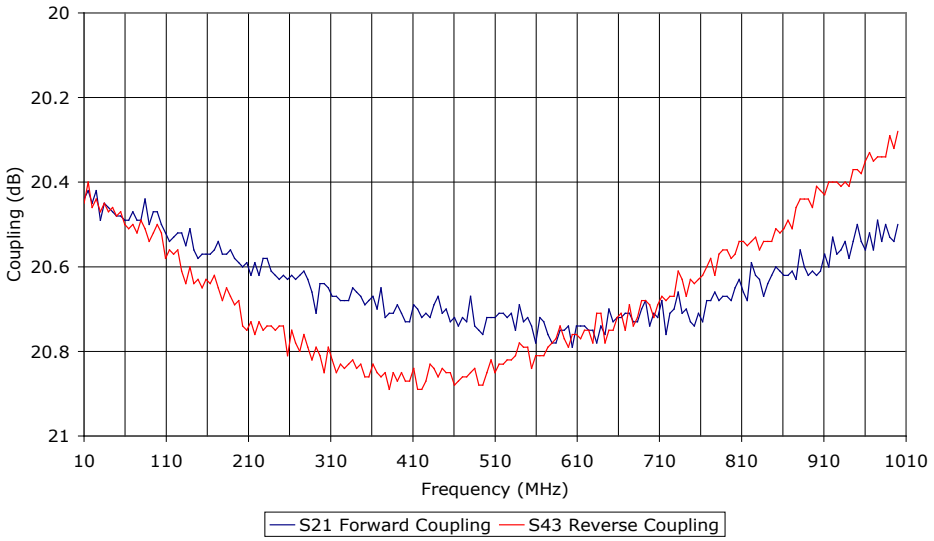

SPECIFICATIONS (Rev. B 01/13/09)

Frequency	10 - 1000 MHz
Coupling	20 ±1 dB (Nom.)
Coupling Flatness)	±1 dB
Mainline Loss	Freq. (MHz) / Typ. (dB) / Max. (dB) 10 - 100 / 0.4 / 0.5 100 - 500 / 0.5 / 1.0 500 - 1000 / 1.0 / 1.5
Directivity	Freq. (MHz) / Typ. (dB) / Min. (dB) 10 - 100 / 30 / 23 100 - 500 / 25 / 18 500 - 1000 / 20 / 15
Input Power	1 Watt (Max.)
Output Impedance	50 Ohms (Nom.)
VSWR:	1.3:1 (Typ.)
Operating Temperature Range	-55 to +100 °C

Package #	113LF

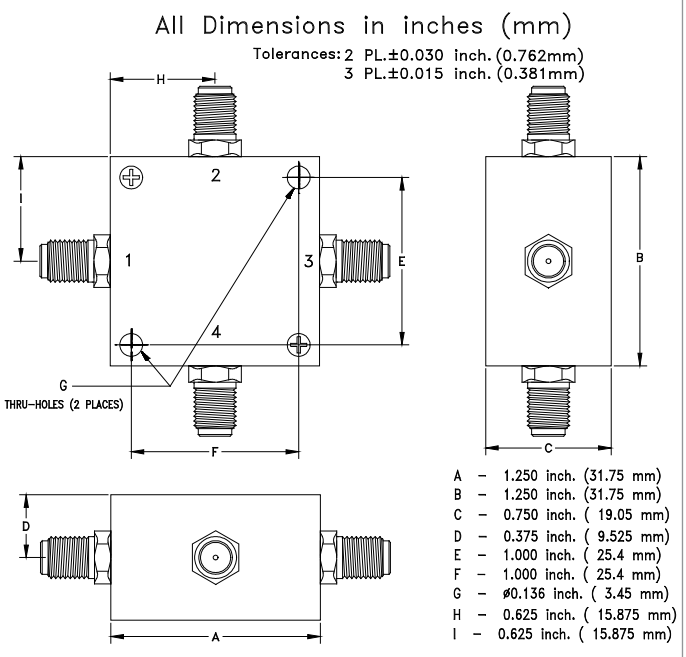

Port Configuration			
Input	Output	FWD. Coupled	REV. Coupled
1	4	2	3

Copyright © Synergy Microwave Corporation
201 McLean Boulevard • Paterson, New Jersey 07504 • Tel: (973) 881-8800 • Fax: (973) 881-8361
E-Mail: sales@synergymwave.com • World Wide Web: http://www.synergymwave.com

SYNERGY® MICROWAVE CORPORATION

BI-DIRECTIONAL COUPLER
CONNECTORIZED MODEL: KDK-744S

WIDE BANDWIDTH **10 - 1000 MHz**

PERFORMANCE PLOTS

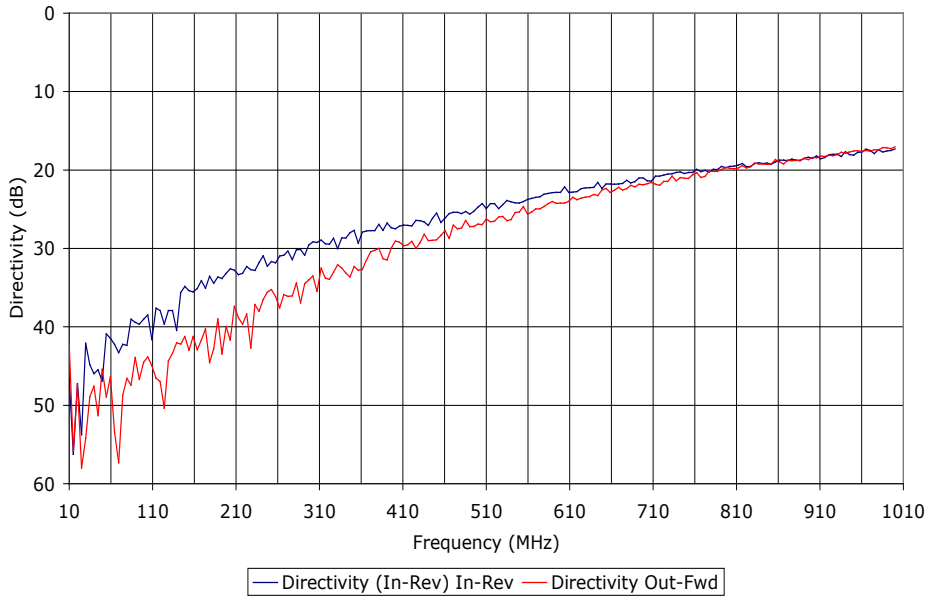

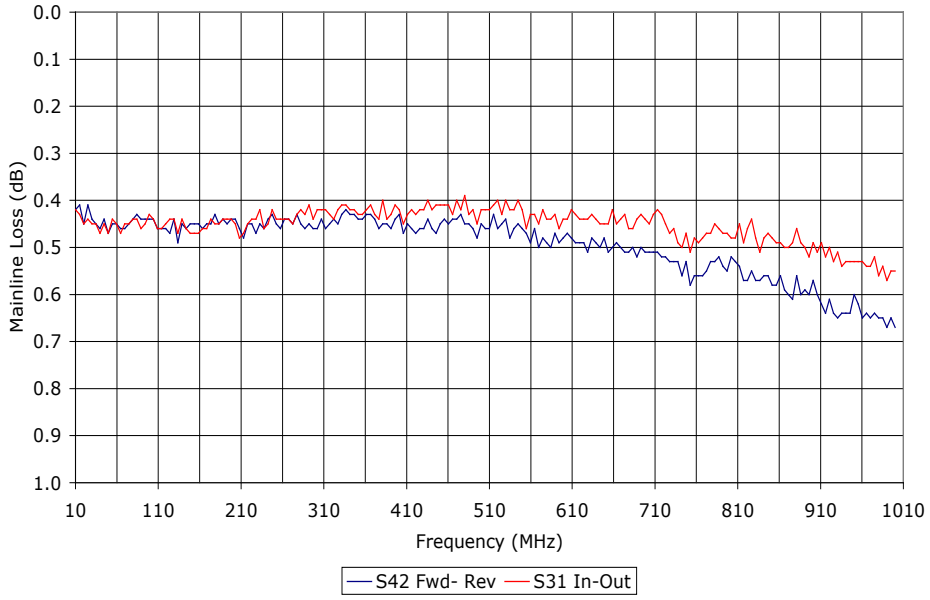

Copyright © Synergy Microwave Corporation
201 McLean Boulevard • Paterson, New Jersey 07504 • Tel: (973) 881-8800 • Fax: (973) 881-8361
E-Mail: sales@synergymwave.com • World Wide Web: http://www.synergymwave.com

SYNERGY® MICROWAVE CORPORATION

BI-DIRECTIONAL COUPLER
CONNECTORIZED MODEL: KDK-744S

WIDE BANDWIDTH **10 - 1000 MHz**

PERFORMANCE PLOTS

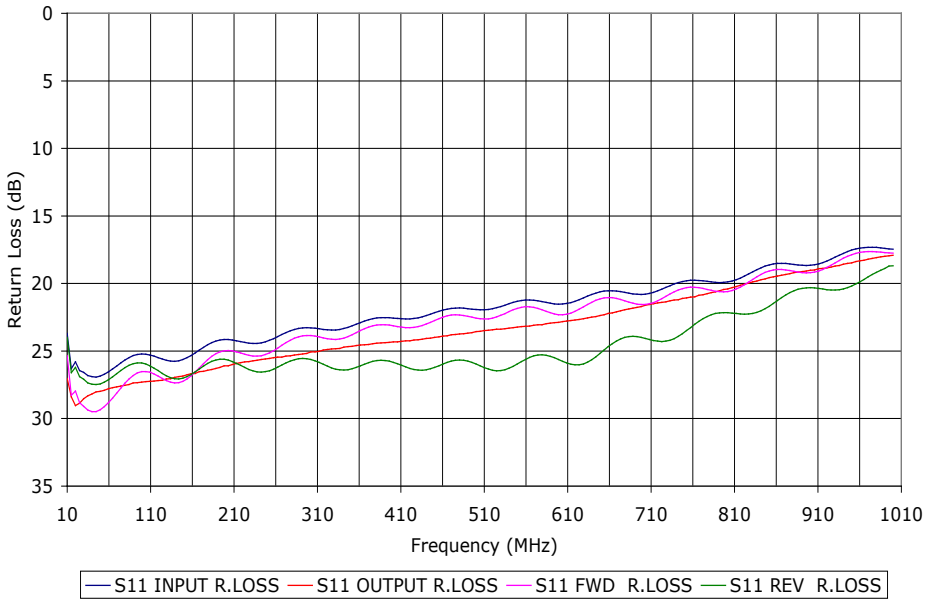

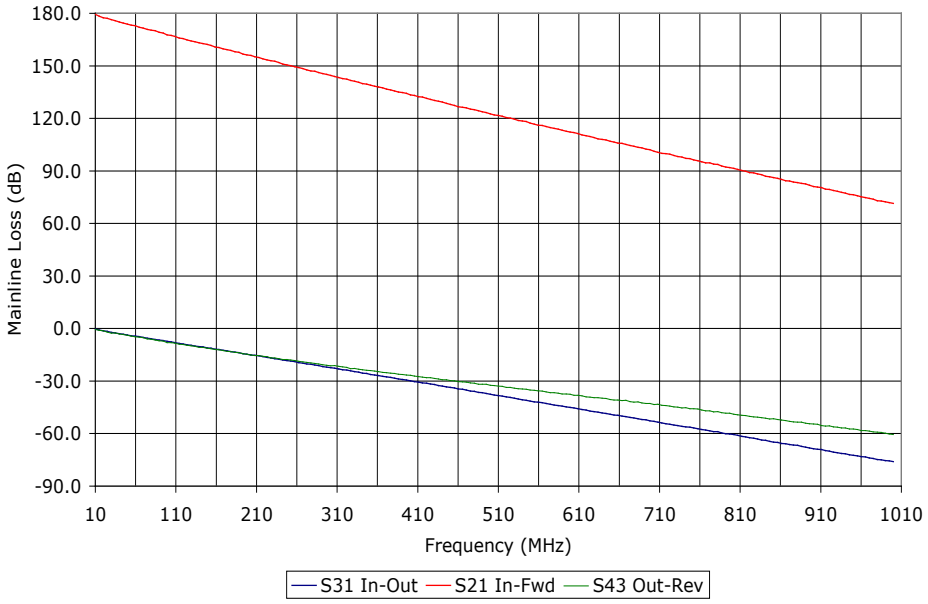

Copyright © Synergy Microwave Corporation
201 McLean Boulevard • Paterson, New Jersey 07504 • Tel: (973) 881-8800 • Fax: (973) 881-8361
E-Mail: sales@synergymwave.com • World Wide Web: http://www.synergymwave.com

SYNERGY® MICROWAVE CORPORATION