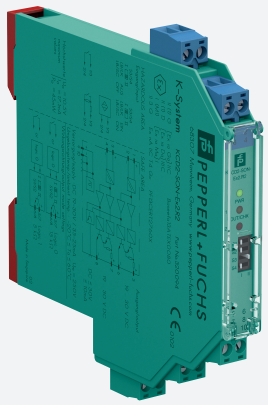

Switch Amplifier

KCD2-SON-Ex2.R2

- 2-channel isolated barrier
- 24 V DC supply (Power Rail)
- Dry contact or NAMUR inputs
- Application-specific outputs
- 2 passive transistor outputs (resistive)
- Line fault transparency (LFT)
- Housing width 12.5 mm
- SIL 2 (SC 3) acc. to IEC/EN 61508

Function

This isolated barrier is used for intrinsic safety applications.
The device transfers digital signals from NAMUR sensors or dry contacts from the hazardous area to the non-hazardous area.
Each input controls a passive transistor output with a resistive output characteristic.
The outputs have three defined states: 1-signal = 5 kΩ, 0-signal = 15 kΩ and fault > 100 kΩ.
This output characteristic offers line fault transparency on the signal lines.
Via switches the mode of operation can be reversed and the line fault detection can be switched off.
A fault is signalized by LEDs and a separate collective error message output.

Connection

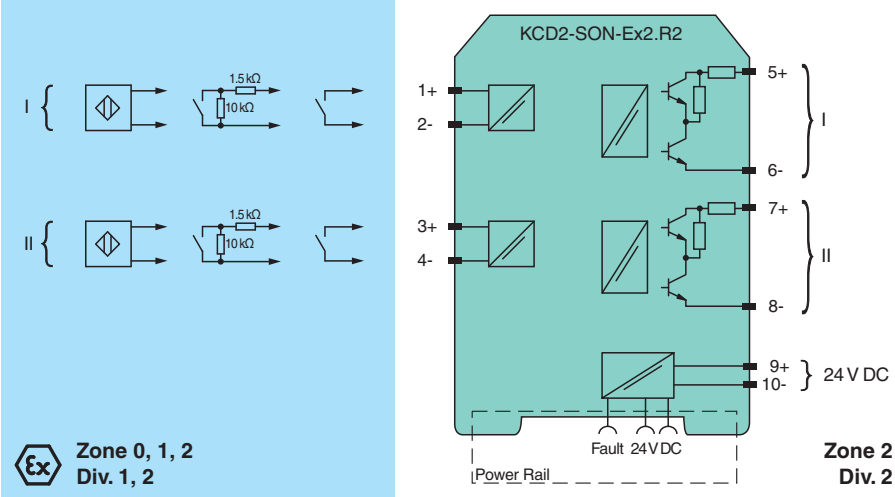

Technical Data

General specifications		
Signal type		Digital Input
Functional safety related parameters		
Safety Integrity Level (SIL)		SIL 2
Systematic capability (SC)		SC 3
Supply		
Connection		Power Rail or terminals 9+, 10-
Rated voltage	U_r	19 ... 30 V DC
Ripple		≤ 10 %
Rated current	I_r	35 ... 25 mA

Release date: 2022-01-10 Date of issue: 2022-01-10 Filename: 320094_eng.pdf

Technical Data

Power dissipation		≤ 750 mW
Input		
Connection side		field side
Connection		terminals 1+, 2-; 3+, 4-
Rated values		acc. to EN 60947-5-6 (NAMUR)
Open circuit voltage/short-circuit current		approx. 10 V DC / approx. 8 mA
Switching point/switching hysteresis		1.2 ... 2.1 mA / approx. 0.2 mA
Line fault detection		breakage I ≤ 0.1 mA , short-circuit I ≥ 6.5 mA
Pulse/Pause ratio		min. 100 µs / min. 100 µs
Output		
Connection side		control side
Connection		output I: terminals 5, 6 ; output II: terminals 7, 8
Rated voltage	U_r	19 ... 30 V DC
Response time		≤ 200 µs
Output I, II		signal or error message, passive transistor output (resistive) 0-signal: 15 kΩ ± 5 % 1-signal: 5 kΩ ± 5 % fault: > 100 kΩ
Collective error message		Power Rail
Transfer characteristics		
Switching frequency		≤ 5 kHz
Galvanic isolation		
Input/Output		reinforced insulation acc. to EN 50178, rated insulation voltage 300 V_{eff}
Input/power supply		reinforced insulation acc. to EN 50178, rated insulation voltage 300 V_{eff}
Output/power supply		basic insulation according to EN 50178, rated insulation voltage 50 V_{eff}
Output/Output		basic insulation according to EN 50178, rated insulation voltage 50 V_{eff}
Indicators/settings		
Display elements		LEDs
Control elements		DIP switch
Configuration		via DIP switches
Labeling		space for labeling at the front
Directive conformity		
Electromagnetic compatibility		
Directive 2014/30/EU		EN 61326-1:2013 (industrial locations)
Conformity		
Electromagnetic compatibility		NE 21:2011 , EN 61326-3-2:2008
Degree of protection		IEC 60529:2001
Protection against electrical shock		IEC 61010-1:2010
Input		EN 60947-5-6:2000
Ambient conditions		
Ambient temperature		-20 ... 60 °C (-4 ... 140 °F) extended ambient temperature range up to 70 °C (158 °F), refer to manual for necessary mounting conditions
Mechanical specifications		
Degree of protection		IP20
Connection		screw terminals
Mass		approx. 100 g
Dimensions		12.5 x 119 x 114 mm (0.5 x 4.7 x 4.5 inch) (W x H x D) , housing type A2
Mounting		on 35 mm DIN mounting rail acc. to EN 60715:2001
Data for application in connection with hazardous areas		
EU-type examination certificate		BASEEFA 13 ATEX 0080
Marking		Ⓔx II (1)G [Ex ia Ga] IIC Ⓔx II (1)D [Ex ia Da] IIIC Ⓔx I (M1) [Ex ia Ma] I
Input		Ex ia
Voltage	U_o	10.5 V

Release date: 2022-01-10 Date of issue: 2022-01-10 Filename: 320094_eng.pdf

Technical Data

Current	I_o	17.1 mA
Power	P_o	45 mW (linear characteristic)
Supply		
Maximum safe voltage	U_m	253 V AC (Attention! U_m is no rated voltage.)
Output		
Maximum safe voltage	U_m	253 V AC (Attention! The rated voltage can be lower.)
Certificate		CML 19 ATEX 4410 X
Marking		Ⓔx II 3G Ex ec IIC T4 Gc
Galvanic isolation		
Input/Output		safe electrical isolation acc. to IEC/EN 60079-11, voltage peak value 375 V
Input/power supply		safe electrical isolation acc. to IEC/EN 60079-11, voltage peak value 375 V
Directive conformity		
Directive 2014/34/EU		EN IEC 60079-0:2018 , EN 60079-7:2015+A1:2018 , EN 60079-11:2012
International approvals		
UL approval		
Control drawing		116-0374 (cULus)
IECEx approval		
IECEx certificate		IECEx BAS 13.0046 IECEx CML 19.0147X
IECEx marking		[Ex ia Ga] IIC , [Ex ia Da] IIIC , [Ex ia Ma] I Ex ec IIC T4 Gc
General information		
Supplementary information		Observe the certificates, declarations of conformity, instruction manuals, and manuals where applicable. For information see www.pepperl-fuchs.com.

Assembly

Front view

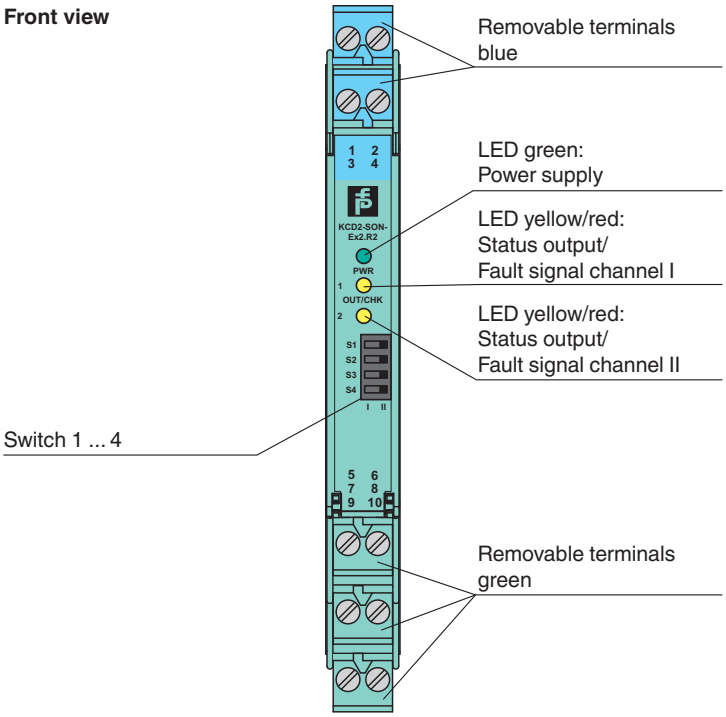

Matching System Components

	KFD2-EB2	Power Feed Module

Release date: 2022-01-10 Date of issue: 2022-01-10 Filename: 320094_eng.pdf

Matching System Components

	UPR-03	Universal Power Rail with end caps and cover, 3 conductors, length: 2 m
	UPR-03-M	Universal Power Rail with end caps and cover, 3 conductors, length: 1,6 m
	UPR-03-S	Universal Power Rail with end caps and cover, 3 conductors, length: 0.8 m
	K-DUCT-BU	Profile rail, wiring comb field side, blue
	K-DUCT-BU-UPR-03	Profile rail with UPR-03- * insert, 3 conductors, wiring comb field side, blue

Accessories

	F-NR3-Ex1	NAMUR Resistor Network
	KC-ST-5GN	Terminal block for KC modules, 2-pin screw terminal, green
	KC-ST-5BU	Terminal block for KC modules, 2-pin screw terminal, blue
	KF-CP	Red coding pins, packaging unit: 20 x 6

Release date: 2022-01-10 Date of issue: 2022-01-10 Filename: 320094_eng.pdf

Application

This device is compatible to the control:

- Honeywell Safety Manager RIO I.S.

Compatibility check to other ESD/DCS systems on request.

Configuration

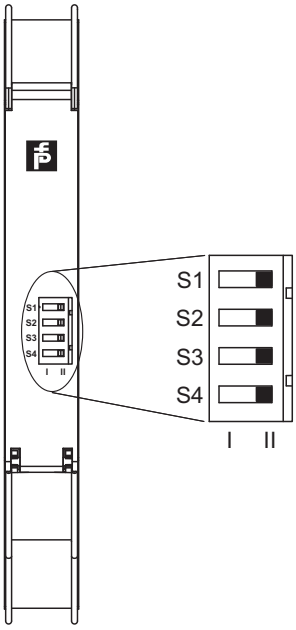

Switch settings

S	Function		Position
1	Mode of operation output I (active)	with high input curent	I
		with low input current	II
2	Mode of operation output II (active)	with high input curent	I
		with low input current	II
3	Line fault detection of the input I	ON	I
		OFF	II
4	Line fault detection of the input II	ON	I
		OFF	II

Operating states

Control circuit	Input signal
Initiator high impedance/contact opened	low input current
Initiator low impedance/contact closed	high input current
Lead breakage, lead short circuit	Line fault

Factory setting: switch 1, 2, 3 and 4 in position I

Characteristic Curve

Switching points

Release date: 2022-01-10 Date of issue: 2022-01-10 Filename: 320094_eng.pdf

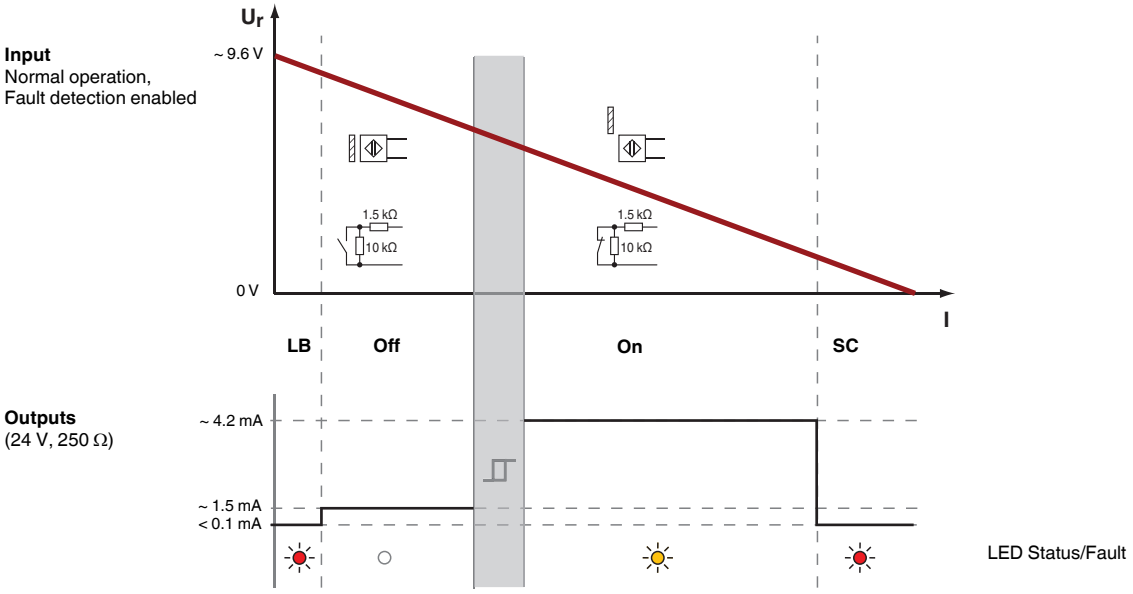

Release date: 2022-01-10 Date of issue: 2022-01-10 Filename: 320094_eng.pdf