KC705 Evaluation Board for the Kintex-7 FPGA

User Guide

UG810 (v1.9) February 4, 2019

XILINX

Revision History

The following table shows the revision history for this document.

Date	Version	Revision
02/04/2019	1.9	Updated the Electrostatic Discharge Caution section. In the DDR3 Memory Module, added information about configuration. Updated Appendix C, Xilinx Design Constraints and Appendix F, Regulatory and Compliance Information.
07/10/2018	1.8.1	Editorial updates only. No technical content updates.
03/20/2018	1.8	In Table 1-1, Quad SPI Flash Memory, and [Ref 6], added Micron MT25QL128ABA8ESF-0SIT as a possible part for U7. In Table 1-24, the I2C addresses were updated for the FMC HPC and FMC LPC device rows.
07/08/2016	1.7	Updated VRP/VRN resistor connection information in DDR3 Memory Module. Moved the Additional Resources and Legal Notices appendix to the end of the book.
08/26/2015	1.6.2	In Table 1-9, the I/O standard for SYSCLK_N and SYSCLK_P were updated to LVDS. In Table 1-27, under Directional Pushbutton Switches, the I/O standard for GPIO_SW_C was updated to LVCMOS25. Updated the #USB UART section of Appendix C, Xilinx Design Constraints.
04/13/2015	1.6.1	In HPC Connector J22, the GTX clock count changed from 1 to 2. Updated links.
12/08/2014	1.6	Added a note about jumper header locations below Table 1-1. Changed Table 1-5 heading J1 DDR3 Memory to U58 BPI Flash Memory. Parts PC28F00AP30TF and N25Q128A13BSF40F changed from Numonyx to Micron. Described J11 and J12 connections in User SMA Clock Input. Made these updates in Programmable User Clock Source: XTP186 became XTP204, RDF0175 became RDF0194, XTP187 became XTP203, and RDF0176 became RDF0193. Corrected the device in the heading of Table 1-20 from CP2013 to CP2103. Updated I2C Bus Switch. Updated Table 1-24 I2C devices. In Table 1-28, J22 pin G7 connects to FPGA U1 pin C27. Replaced Table A-3, *KC705 Default Jumper Settings* and added Figure A-3 to show jumper locations. Replaced the constraints file in Appendix C, Xilinx Design Constraints. Added information about ordering the custom ATX cable to Appendix F, Regulatory and Compliance Information, [Ref 21].
07/11/2014	1.5	Corrected MGT Quad connection information in GTX Transceivers and a connection in Table 1-10. Added MGTREFCLK1 - PCIE_CLK from P1 to Quad 115 in GTX Transceivers. Updated Table 1-4, Table 1-5, Table 1-6, Table 1-7, Table 1-9, Table 1-18, Table 1-21, Table 1-23, Table 1-27, Table 1-28, and Table 1-29. Added table footnotes regarding I/O standard and pins prior to board revision 1.1 to Table 1-14. Clarified default jumper positions in Table 1-15. Corrected the J2 C19 pin number in Table 1-29. In Figure 1-39, changed pin names VBATT to VCCBATT and POUC_B to PUDC_B. Removed three pins from See the Kintex-7 KC705 Evaluation Kit product page Documentation tab for the latest versions of the FPGA pins constraints files (XDC files). (PACKAGE _PIN R8, R7, and W8). The Appendix C title changed to Master Constraints File Listing and the constraints file in Appendix C was replaced. The Declaration of Conformity link in Appendix F was updated.

Date	Version	Revision
07/18/2013	1.4	Revised the format of Table 1-20 and added the I/O standard column. Revised the FPGA U1 pin for FMC_HPC_CLK0_M2C_N in Table 1-28 to C27 on page 59. Revised the descriptions of the functions for SW13 position 3 and position 5 in Table A-2. In Appendix C, Xilinx Design Constraints, changed appendix title from Master UCF Listing to Master Board Constraints, replaced references to the term UCF with the term XDC and replaced the KC705 Board UCF Listing with the See the Kintex-7 KC705 Evaluation Kit product page Documentation tab for the latest versions of the FPGA pins constraints files (XDC files)..
05/10/2013	1.3	Updated Figure 1-1 to show v 1.1 board. Updated Table 1-1: callout 1 to identify Fansink, callouts 25and 26 pointing to User I/O. Added Table 1-9 Clock Source to FPGA U1 Connections. Updated Programmable User Clock Source, page 30 to include I2C address. Updated Table 1-17 for naming pins 18 and 19. Added Note to Table 1-14. Updated I2C Bus Switch to show TI device instead of NXP Semiconductor, deleted; updated [Ref 20]. Added Figure 1-27 Rotary Switch, and Figure 1-28 GPIO SMAs J13 and J14. Added Note to Appendix C, Xilinx Design Constraints. Updated Appendix D, Board Setup, step 1 of installation procedure. Updated Appendix F, Additional Resources to include CE PC Test reference.
12/10/2012	1.2	Replaced direct, inline links to external references in the body text with indirect references to the links in a numbered list in Appendix G, Additional Resources and Legal Notices. Revised the value for frequency jitter for the System Clock Source. Reset conditions are added to Jitter Attenuated Clock Revised jumper information for SFP_RS1 in Table 1-15. Revised contents and organization of Appendix F, Additional Resources.
04/05/2012	1.1	Updated links from Table 1-1. Revised the JTAG configuration mode USB cable description under FPGA Configuration. Added Encryption Key Backup Circuit and Table 1-4. Added links to User SMA Clock Input in Table 1-8. Added link to Si570 device vendor on page 31. Added Ethernet PHY Status LEDs and Figure 1-23. Updated Power On/Off Slide Switch SW15 and added Figure 1-31. Revised FPGA Mezzanine Card Interface and Table 1-28 and Table 1-29. Added description of power module cooling requirement to Power Management. Added Cooling Fan Control. Updated Table 1-35. Added references to Documents, page 85. Added Appendix E, Compliance with European Union Directives and Standards, Appendix D, Board Setup, and Appendix E, Board Specifications.
01/23/2012	1.0	Initial Xilinx release.

Table of Contents

Revision History 2

Chapter 1: KC705 Evaluation Board Features

Overview 6
Electrostatic Discharge Caution 8
Feature Descriptions 10
Configuration Options 81

Appendix A: Default Switch and Jumper Settings

DIP Switch SW11 User GPIO 84
DIP Switch SW13 Mode and Flash Memory Address Settings 85
Default Jumper Settings 85

Appendix B: VITA 57.1 FMC Connector Pinouts

Appendix C: Xilinx Design Constraints

Appendix D: Board Setup

Installing KC705 Board in a PC Chassis 90

Appendix E: Board Specifications

Dimensions 92
Environmental 92

Appendix F: Regulatory and Compliance Information

Overview 93
Declaration of Conformity 93
CE Directives 93
CE Standards 93
Markings 94

Appendix G: Additional Resources and Legal Notices

Xilinx Resources 95

Solution Centers 95
Documentation Navigator and Design Hubs 95
References 96
Please Read: Important Legal Notices 98

XILINX

Chapter 1

KC705 Evaluation Board Features

Overview

The KC705 evaluation board for the Kintex®-7 FPGA provides a hardware environment for developing and evaluating designs targeting the Kintex-7 XC7K325T-2FFG900C FPGA. The KC705 board provides features common to many embedded processing systems, including a DDR3 SODIMM memory, an 8-lane PCI Express® interface, a tri-mode Ethernet PHY, general purpose I/O, and a UART interface. Other features can be added by using FPGA Mezzanine Cards (FMCs) attached to either of two VITA-57 FPGA mezzanine connectors provided on the board. High pin count (HPC) and low pin count (LPC) FMCs are provided. See KC705 Board Features for a complete list of features. The details for each feature are described in Feature Descriptions.

Additional Information

See Appendix G, Additional Resources and Legal Notices for references to documents, files, and resources relevant to the KC705 board.

KC705 Board Features

- Kintex-7 XC7K325T-2FFG900C FPGA
- 1 GB DDR3 memory SODIMM
- 128 MB Linear Byte Peripheral Interface (BPI) flash memory
- 128 Mb Quad Serial Peripheral Interface (SPI) flash memory
- Secure Digital (SD) connector
- USB JTAG via Digilent module
- Clock generation
  - Fixed 200 MHz LVDS oscillator (differential)
  - Inter-integrated circuit (I2C) programmable LVDS oscillator (differential)
  - SMA connectors (differential)
  - SMA connectors for GTX transceiver clocking

- GTX transceivers
  - FMC HPC connector (four GTX transceivers)
  - FMC LPC connector (one GTX transceiver)
  - SMA connectors (one pair each for TX, RX, and REFCLK)
  - PCI Express (eight lanes)
  - Small form-factor pluggable plus (SFP+) connector
  - Ethernet PHY SGMII interface (RJ-45 connector)
- PCI Express endpoint connectivity
  - Gen1 8-lane (x8)
  - Gen2 8-lane (x8)
- SFP+ Connector
- 10/100/1000 tri-speed Ethernet PHY
- USB-to-UART bridge
- High-Definition Multimedia Interface ™ (HDMI) technology codec
- I2C bus
  - I2C mux
  - I2C EEPROM (1 KB)
  - USER I2C programmable LVDS oscillator
  - DDR3 SODIMM socket
  - HDMI codec
  - FMC HPC connector
  - FMC LPC connector
  - SFP+ connector
  - I2C programmable jitter-attenuating precision clock multiplier
- Status LEDs
  - Ethernet status
  - Power good
  - FPGA INIT
  - FPGA DONE
- User I/O
  - USER LEDs (eight GPIO)

  - User pushbuttons (five directional)
  - CPU reset pushbutton
  - User DIP switch (4-pole GPIO)
  - User edge drive rotary encoder switch
  - User SMA GPIO connectors (one pair)
  - LCD character display (16 characters x 2 lines)
- Switches
  - Power on/off slide switch
  - FPGA_PROG_B pushbutton switch
- VITA 57.1 FMC HPC Connector
- VITA 57.1 FMC LPC Connector
- Power management
  - PMBus voltage and current monitoring via TI power controller
- XADC header
- Configuration options
  - Linear BPI flash memory
  - Quad SPI flash memory
  - USB JTAG configuration port
  - Platform cable header JTAG configuration port

The KC705 board block diagram is shown in Figure 1-1. The KC705 board schematics are available for download from the Kintex-7 FPGA KC705 Evaluation Kit website.

Electrostatic Discharge Caution

CAUTION! *ESD can damage electronic components when they are improperly handled, and can result in total or intermittent failures. Always follow ESD-prevention procedures when removing and replacing components.*

To prevent ESD damage:

- Use an ESD wrist or ankle strap and ensure that it makes skin contact. Connect the equipment end of the strap to an unpainted metal surface on the chassis.

- Avoid touching the adapter against your clothing. The wrist strap protects components from ESD on the body only.
- Handle the adapter by its bracket or edges only. Avoid touching the printed circuit board or the connectors.
- Put the adapter down only on an anti-static surface such as the bag supplied in your kit.
- If you are returning the adapter to Xilinx Product Support, place it back in its anti-static bag immediately.

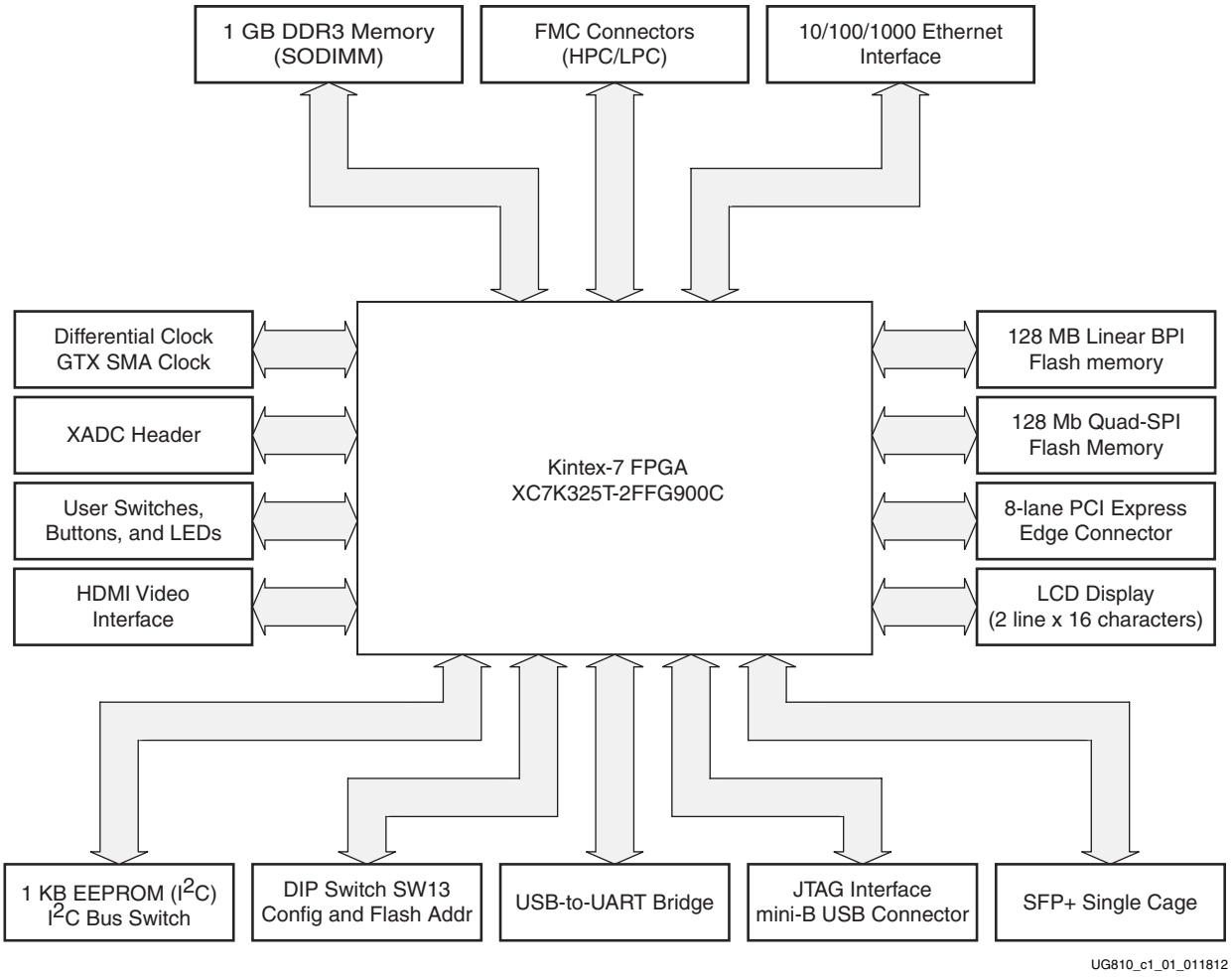

Figure 1-1: **KC705 Board Block Diagram**

Feature Descriptions

The following figure shows the KC705 board. Each numbered feature that is referenced in Figure 1-2 is described in the sections that follow.

Note: The image in Figure 1-2 is for reference only and might not reflect the current revision of the board.

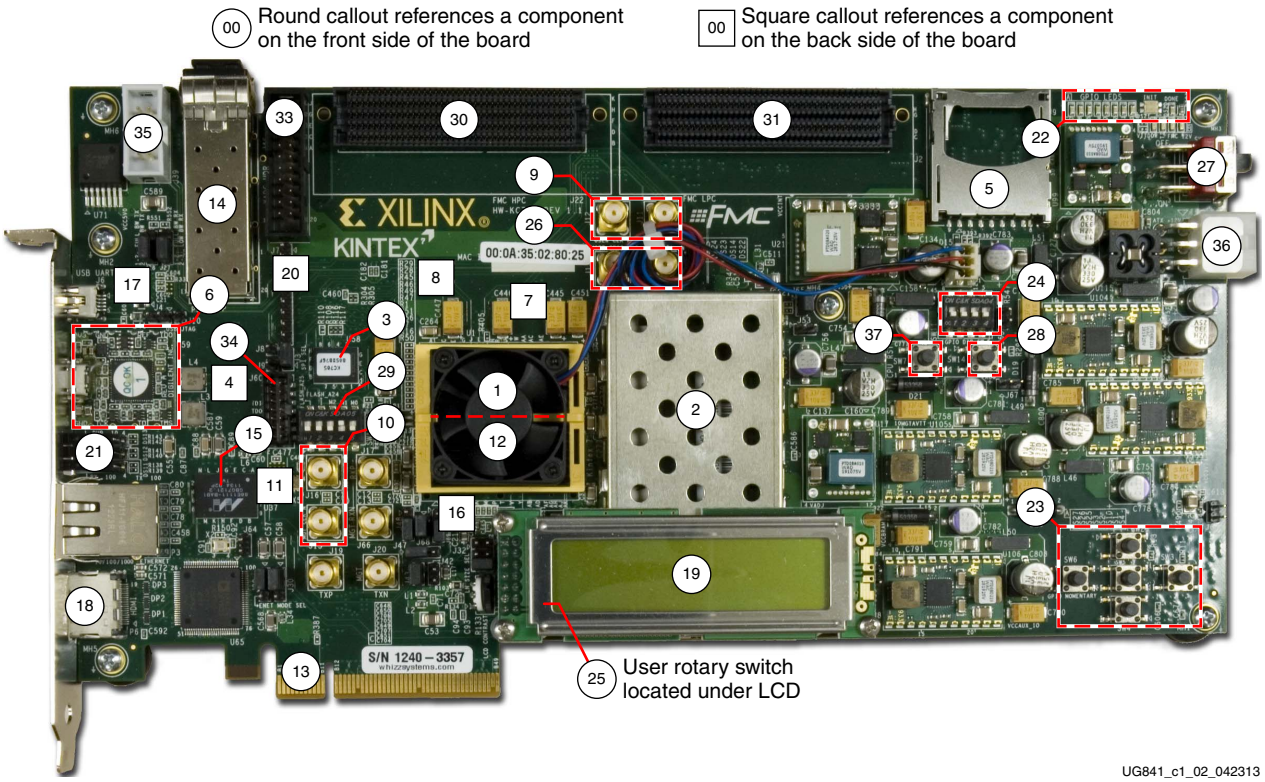

Figure 1-2: **KC705 Board Components**

Table 1-1: **KC705 Board Component Descriptions**

Callout	Reference Designator	Component Description	Notes	Schematic 0381397 Page Number
1	U1	Kintex-7 FPGA (Located under fansink)	XC7K325T-2FFG900C, Radian INC3001-7_1.5BU_LI98	
2	J1	DDR3 Memory Module, under EMI shield	Micron MT8JTF12864HZ-1G6G1	15
3	U58	Linear BPI Flash Memory	Micron PC28F00AP30TF	26
4	U7	Quad SPI Flash Memory	Micron N25Q128A13BSF40F or Micron MT25QL128ABA8ESF-0SIT	26
5	U9	SD Card Interface	Molex 67840-8001	28

Table 1-1: **KC705 Board Component Descriptions *(Cont'd)***

Callout	Reference Designator	Component Description	Notes	Schematic 0381397 Page Number
6		USB JTAG Module	Digilent USB JTAG Module (with micro-B receptacle)	14
7	U6	System Clock Source (back side of board)	SiTime SIT9102-243N25E200.0000	23
8	U45	Programmable User Clock Source (back side of board)	Silicon Labs SI570BAB0000544DG	23
9	J11, J12	User SMA Clock Input	Rosenberger 32K10K-400L5	23
10	J15, J16	GTX SMA Clock Input	Rosenberger 32K10K-400L5	23
11	U70	Jitter Attenuated Clock	Silicon Labs SI5324C-C-GM	24
12		GTX Transceivers	Embedded within FPGA U1	9
13	P1	PCI Express Edge Connector	8-lane card edge connector	21
14	P5	SFP/SFP+ Connector	Molex 74441-0010	22
15	U37	10/100/1000 Tri-Speed Ethernet PHY	Marvell M88E1111-BAB1C000	25
16	U2	SGMII GTX Transceiver Clock Generator	ICS ICS84402IAGI-01LF	23
17	J6, U12	USB-to-UART Bridge	Silicon Labs CP2103GM bridge (back side of board) and min-B receptacle (front side of board)	27
18	P6, U65	HDMI Video Output	Molex 500254-1927, Analog Devices ADV7511KSTZ-P	34, 33
19	J31	LCD Character Display	2 x 7 0.1 in male pin header	30
20	U49	I2C Bus Switch, page 53	TI PCA9548ARGER	32
21	DS11 - DS13	Ethernet PHY Status LEDs	EPHY status LED, dual green	25
34	DS14, DS20 - DS24	Status LEDs	Status LEDs, green	29
22	DS1 - DS4, Ds10, DS25 - DS27	User GPIO LEDs	GPIO LEDs, green	29
23	SW2 – SW6	User Pushbuttons	E-Switch TL3301EP100QG	29
24	SW11	GPIO DIP Switch	C and K 4-pole, SDA05H1SBD	29
25	SW8	Rotary Switch	Panasonic EVQ-WK4001	29
26	J13, J14	GPIO SMA Connectors	Rosenberger 32K10K-400L5	23
27	SW15	Power On/Off Slide Switch SW15	C and K 1201M2S3AQE2	35
28	SW14	FPGA_PROG_B Pushbutton SW14 (Active-Low)	E-Switch TL3301EP100QG	29
29	SW13	Configuration Mode and Upper Linear Flash Address Switch (SW13)	5-pole C and K SDA05H1IBD	27

Table 1-1: **KC705 Board Component Descriptions *(Cont'd)***

Callout	Reference Designator	Component Description	Notes	Schematic 0381397 Page Number
30	J22	HPC Connector J22	Samtec ASP_134486_01	16-19
31	J2	LPC Connector J2	Samtec ASP_134603_01	20
32	U55, U21, U103, U17, U56, U104, U105, U89, U106, U99, U71, U62, U17, U18, U33	Power Management (voltage regulators front side of board, controllers back side of board)	TI UCD9248PFC controllers in conjunction with various regulators	35-46
33	J46	XADC Header	2X10 0.1" male header	31
34	J60	2 x 7 2 mm shrouded JTAG cable connector	Molex 87832-1420	16
35	J39	2 x 5 shrouded PMBus connector	Assman HW10G-0202	35
36	J49	12V power input 2 x 3 connector	Molex 39-30-1060	35
37	SW7	CPU Reset Pushbutton	E-Switch TL3301EP100QG	35

Note: Jumper header locations are identified in Appendix A, Default Switch and Jumper Settings.

Kintex-7 FPGA

[Figure 1-2, callout 1]

The KC705 board is populated with the Kintex-7 XC7K325T-2FFG900C FPGA.

For further information on Kintex-7 FPGAs, see *7 Series FPGAs Overview* (DS180) [Ref 1].

FPGA Configuration

The KC705 board supports three of the five 7 series FPGA configuration modes:

- Master SPI flash memory using the onboard Quad SPI flash memory
- Master BPI flash memory using the onboard Linear BPI flash memory
- JTAG using a standard-A to micro-B USB cable for connecting the host PC to the KC705 board configuration port

Each configuration interface corresponds to one or more configuration modes and bus widths as listed in Table 1-2. The mode switches M2, M1, and M0 are on SW13 positions 3, 4, and 5 respectively as shown in the figure below.

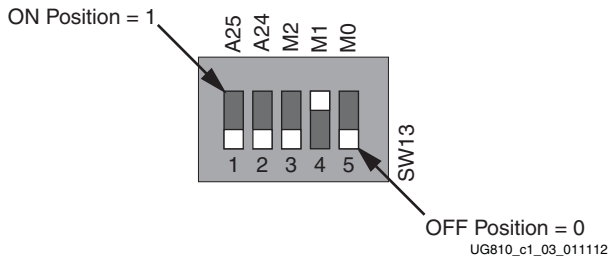

Figure 1-3: **SW13 Default Settings**

The default mode setting is M[2:0] = 010, which selects Master BPI at board power-on. Refer to the Configuration Options for detailed information about the mode switch SW13.

Table 1-2: **KC705 Board FPGA Configuration Modes**

Configuration Mode	SW13 DIP Switch Settings (M[2:0])	Bus Width	CCLK Direction
Master SPI	001	x1, x2, x4	Output
Master BPI	010	x8, x16	Output
JTAG	101	x1	Not applicable

For full details on configuring the FPGA, see *7 Series FPGAs Configuration User Guide (UG470)* [Ref 3].

Encryption Key Backup Circuit

FPGA U1 implements bitstream encryption key technology. The KC705 board provides the encryption key backup battery circuit shown in Figure 1-4. The rechargeable 1.5V lithium button-type battery B1 is soldered to the board with the positive output connected to FPGA U1 VCCBATT pin C10. The battery supply current I_{BATT} specification is 150 nA max when board power is off. B1 is charged from the VCCAUX_IO 2.0V rail through a series diode with a typical forward voltage drop of 0.38V and 4.7 kΩ current limit resistor. The nominal charging voltage is 1.62V.

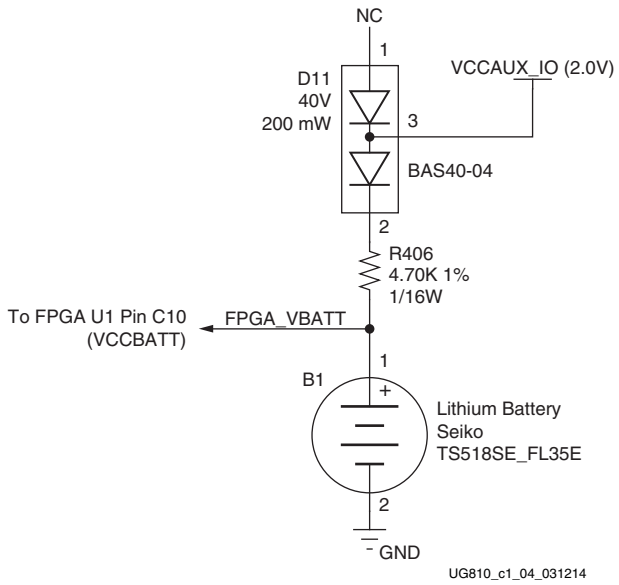

Figure 1-4: **Encryption Key Backup Circuit**

I/O Voltage Rails

There are 10 I/O banks available on the Kintex-7 device. The voltages applied to the FPGA I/O banks used by the KC705 board are listed in the table below.

Table 1-3: **I/O Voltage Rails**

U1 FPGA Bank	Power Supply Rail Net Name	Voltage
Bank 0	VCC2V5_FPGA	2.5V
Bank 12(1)	VADJ_FPGA	2.5V (default)
Bank 13(1)	VADJ_FPGA	2.5V (default)
Bank 14	VCC2V5_FPGA	2.5V
Bank 15	VCC2V5_FPGA	2.5V
Bank 16(1)	VADJ_FPGA	2.5V (default)
Bank 17(1)	VADJ_FPGA	2.5V (default)
Bank 18(1)	VADJ_FPGA	2.5V (default)
Bank 32	VCC1V5_FPGA	1.5V
Bank 33	VCC1V5_FPGA	1.5V
Bank 34	VCC1V5_FPGA	1.5V

Notes:

1. The VADJ_FPGA rail can support 1.8V, 2.5V, or 3.3V. For more information on VADJ_FPGA, see Power Management.

DDR3 Memory Module

[Figure 1-2, callout 2]

The memory module at J1 is a 1 GB DDR3 small outline dual-inline memory module (SODIMM). It provides volatile synchronous dynamic random access memory (SDRAM) for storing user code and data.

- Part number: MT8JTF12864HZ-1G6G1 (Micron Technology)
- Configuration: 1GB (128 Mb x 64)
- Supply voltage: 1.5V
- Datapath width: 64 bits
- Data rate: Up to 1,600 MT/s

The KC705 XC7K325T FPGA memory interface performance is documented in the *Kintex-7 FPGAs Data Sheet: DC and AC Switching Characteristics* (DS182) [Ref 2].

The DDR3 interface is implemented across I/O banks 32, 33, and 34. Each bank is a 1.5V high-performance (HP) bank. The VRP/VRN DCI resistor connection to bank 33 is cascaded to the data interface banks 32 and 34 by adding the DCI cascade constraint to the XDC:

```
# Set DCI_CASCADE
set_property slave_banks {32 34} [get_iobanks 33]
```

An external 0.75V reference VTTREF is provided for data interface banks 32 and 34. Any interface connected to these banks that requires a reference voltage must use this FPGA voltage reference. The connections between the DDR 3 memory and the FPGA are listed in the following table.

Table 1-4: **DDR3 Memory Connections to the FPGA**

U1 FPGA Pin	Net Name	I/O Standard	J1 DDR3 Memory	
			Pin Number	Pin Name
AH12	DDR3_A0	SSTL15	98	A0
AG13	DDR3_A1	SSTL15	97	A1
AG12	DDR3_A2	SSTL15	96	A2
AF12	DDR3_A3	SSTL15	95	A3
AJ12	DDR3_A4	SSTL15	92	A4
AJ13	DDR3_A5	SSTL15	91	A5
AJ14	DDR3_A6	SSTL15	90	A6
AH14	DDR3_A7	SSTL15	86	A7
AK13	DDR3_A8	SSTL15	89	A8

Table 1-4: **DDR3 Memory Connections to the FPGA *(Cont'd)***

U1 FPGA Pin	Net Name	I/O Standard	J1 DDR3 Memory	
			Pin Number	Pin Name
AK14	DDR3_A9	SSTL15	85	A9
AF13	DDR3_A10	SSTL15	107	A10/AP
AE13	DDR3_A11	SSTL15	84	A11
AJ11	DDR3_A12	SSTL15	83	A12_BC_N
AH11	DDR3_A13	SSTL15	119	A13
AK10	DDR3_A14	SSTL15	80	A14
AK11	DDR3_A15	SSTL15	78	A15
AH9	DDR3_BA0	SSTL15	109	BA0
AG9	DDR3_BA1	SSTL15	108	BA1
AK9	DDR3_BA2	SSTL15	79	BA2
AA15	DDR3_D0	SSTL15	5	DQ0
AA16	DDR3_D1	SSTL15	7	DQ1
AC14	DDR3_D2	SSTL15	15	DQ2
AD14	DDR3_D3	SSTL15	17	DQ3
AA17	DDR3_D4	SSTL15	4	DQ4
AB15	DDR3_D5	SSTL15	6	DQ5
AE15	DDR3_D6	SSTL15	16	DQ6
Y15	DDR3_D7	SSTL15	18	DQ7
AB19	DDR3_D8	SSTL15	21	DQ8
AD16	DDR3_D9	SSTL15	23	DQ9
AC19	DDR3_D10	SSTL15	33	DQ10
AD17	DDR3_D11	SSTL15	35	DQ11
AA18	DDR3_D12	SSTL15	22	DQ12
AB18	DDR3_D13	SSTL15	24	DQ13
AE18	DDR3_D14	SSTL15	34	DQ14
AD18	DDR3_D15	SSTL15	36	DQ15
AG19	DDR3_D16	SSTL15	39	DQ16
AK19	DDR3_D17	SSTL15	41	DQ17
AG18	DDR3_D18	SSTL15	51	DQ18
AF18	DDR3_D19	SSTL15	53	DQ19
AH19	DDR3_D20	SSTL15	40	DQ20

Table 1-4: **DDR3 Memory Connections to the FPGA *(Cont'd)***

U1 FPGA Pin	Net Name	I/O Standard	J1 DDR3 Memory	
			Pin Number	Pin Name
AJ19	DDR3_D21	SSTL15	42	DQ21
AE19	DDR3_D22	SSTL15	50	DQ22
AD19	DDR3_D23	SSTL15	52	DQ23
AK16	DDR3_D24	SSTL15	57	DQ24
AJ17	DDR3_D25	SSTL15	59	DQ25
AG15	DDR3_D26	SSTL15	67	DQ26
AF15	DDR3_D27	SSTL15	69	DQ27
AH17	DDR3_D28	SSTL15	56	DQ28
AG14	DDR3_D29	SSTL15	58	DQ29
AH15	DDR3_D30	SSTL15	68	DQ30
AK15	DDR3_D31	SSTL15	70	DQ31
AK8	DDR3_D32	SSTL15	129	DQ32
AK6	DDR3_D33	SSTL15	131	DQ33
AG7	DDR3_D34	SSTL15	141	DQ34
AF7	DDR3_D35	SSTL15	143	DQ35
AF8	DDR3_D36	SSTL15	130	DQ36
AK4	DDR3_D37	SSTL15	132	DQ37
AJ8	DDR3_D38	SSTL15	140	DQ38
AJ6	DDR3_D39	SSTL15	142	DQ39
AH5	DDR3_D40	SSTL15	147	DQ40
AH6	DDR3_D41	SSTL15	149	DQ41
AJ2	DDR3_D42	SSTL15	157	DQ42
AH2	DDR3_D43	SSTL15	159	DQ43
AH4	DDR3_D44	SSTL15	146	DQ44
AJ4	DDR3_D45	SSTL15	148	DQ45
AK1	DDR3_D46	SSTL15	158	DQ46
AJ1	DDR3_D47	SSTL15	160	DQ47
AF1	DDR3_D48	SSTL15	163	DQ48
AF2	DDR3_D49	SSTL15	165	DQ49
AE4	DDR3_D50	SSTL15	175	DQ50
AE3	DDR3_D51	SSTL15	177	DQ51

Table 1-4: **DDR3 Memory Connections to the FPGA *(Cont'd)***

U1 FPGA Pin	Net Name	I/O Standard	J1 DDR3 Memory	
			Pin Number	Pin Name
AF3	DDR3_D52	SSTL15	164	DQ52
AF5	DDR3_D53	SSTL15	166	DQ53
AE1	DDR3_D54	SSTL15	174	DQ54
AE5	DDR3_D55	SSTL15	176	DQ55
AC1	DDR3_D56	SSTL15	181	DQ56
AD3	DDR3_D57	SSTL15	183	DQ57
AC4	DDR3_D58	SSTL15	191	DQ58
AC5	DDR3_D59	SSTL15	193	DQ59
AE6	DDR3_D60	SSTL15	180	DQ60
AD6	DDR3_D61	SSTL15	182	DQ61
AC2	DDR3_D62	SSTL15	192	DQ62
AD4	DDR3_D63	SSTL15	194	DQ63
Y16	DDR3_DM0	SSTL15	11	DM0
AB17	DDR3_DM1	SSTL15	28	DM1
AF17	DDR3_DM2	SSTL15	46	DM2
AE16	DDR3_DM3	SSTL15	63	DM3
AK5	DDR3_DM4	SSTL15	136	DM4
AJ3	DDR3_DM5	SSTL15	153	DM5
AF6	DDR3_DM6	SSTL15	170	DM6
AC7	DDR3_DM7	SSTL15	187	DM7
AC15	DDR3_DQS0_N	DIFF_SSTL15	10	DQS0_N
AC16	DDR3_DQS0_P	DIFF_SSTL15	12	DQS0_P
Y18	DDR3_DQS1_N	DIFF_SSTL15	27	DQS1_N
Y19	DDR3_DQS1_P	DIFF_SSTL15	29	DQS1_P
AK18	DDR3_DQS2_N	DIFF_SSTL15	45	DQS2_N
AJ18	DDR3_DQS2_P	DIFF_SSTL15	47	DQS2_P
AJ16	DDR3_DQS3_N	DIFF_SSTL15	62	DQS3_N
AH16	DDR3_DQS3_P	DIFF_SSTL15	64	DQS3_P
AJ7	DDR3_DQS4_N	DIFF_SSTL15	135	DQS4_N
AH7	DDR3_DQS4_P	DIFF_SSTL15	137	DQS4_P
AH1	DDR3_DQS5_N	DIFF_SSTL15	152	DQS5_N

Table 1-4: **DDR3 Memory Connections to the FPGA *(Cont'd)***

U1 FPGA Pin	Net Name	I/O Standard	J1 DDR3 Memory	
			Pin Number	Pin Name
AG2	DDR3_DQS5_P	DIFF_SSTL15	154	DQS5_P
AG3	DDR3_DQS6_N	DIFF_SSTL15	169	DQS6_N
AG4	DDR3_DQS6_P	DIFF_SSTL15	171	DQS6_P
AD1	DDR3_DQS7_N	DIFF_SSTL15	186	DQS7_N
AD2	DDR3_DQS7_P	DIFF_SSTL15	188	DQS7_P
AD8	DDR3_ODT0	SSTL15	116	ODT0
AC10	DDR3_ODT1	SSTL15	120	ODT1
AK3	DDR3_RESET_B	LVCMOS15	30	RESET_B
AC12	DDR3_S0_B	SSTL15	114	S0_B
AE8	DDR3_S1_B	SSTL15	121	S1_B
AJ9	DDR3_TEMP_EVENT	SSTL15	198	EVENT_B
AE9	DDR3_WE_B	SSTL15	113	WE_B
AC11	DDR3_CAS_B	SSTL15	115	CAS_B
AD9	DDR3_RAS_B	SSTL15	110	RAS_B
AF10	DDR3_CKE0	SSTL15	73	CKE0
AE10	DDR3_CKE1	SSTL15	74	CKE1
AH10	DDR3_CLK0_N	DIFF_SSTL15	103	CK0_N
AG10	DDR3_CLK0_P	DIFF_SSTL15	101	CK0_P
AF11	DDR3_CLK1_N	DIFF_SSTL15	104	CK1_N
AE11	DDR3_CLK1_P	DIFF_SSTL15	102	CK1_P

The KC705 DDR3 SODIMM interface adheres to the constraints guidelines documented in the DDR3 Design Guidelines section of *7 Series FPGAs Memory Interface Solutions User Guide* (UG586) [Ref 4]. The KC705 DDR3 SODIMM interface is a 40Ω impedance implementation. Other memory interface details are available in UG586 and *7 Series FPGAs Memory Resources User Guide* (UG473) [Ref 5] . For more information about the Micron MT8JTF12864HZ-1G6G1 part, see [Ref 6].

Linear BPI Flash Memory

[Figure 1-2, callout 3]

The Linear BPI flash memory located at U58 provides 128 MB of nonvolatile storage that can be used for configuration or software storage. The data, address, and control signals are connected to the FPGA. The BPI flash memory device is packaged in a 64-pin BGA.

- Part number: PC28F00AP30TF (Micron)
- Supply voltage: 2.5V
- Datapath width: 16 bits (26 address lines and 7 control signals)
- Data rate: Up to 33 MHz

The Linear BPI flash memory can synchronously configure the FPGA in Master BPI mode at the 33 MHz data rate supported by the PC28F00AP30TF flash memory by using a configuration bitstream generated with BitGen options for synchronous configuration and for configuration clock division. The fastest configuration method uses the external 66 MHz oscillator connected to the FPGA EMCCLK pin with a bitstream that has been built to divide the configuration clock by two. The division is necessary to remain within the synchronous read timing specifications of the flash memory.

Multiple bitstreams can be stored in the Linear BPI flash memory. The two most significant address bits (A25, A24) of the flash memory are connected to DIP switch SW13 positions 1 and 2 respectively, and to the RS1 and RS0 pins of the FPGA. By placing valid XC7K325T bitstreams at four different offset addresses in the flash memory, 1 of the 4 bitstreams can be selected to configure the FPGA by appropriately setting the DIP switch SW13. The connections between the BPI flash memory and the FPGA are listed in the table below.

Table 1-5: **BPI Flash Memory Connections to the FPGA**

U1 FPGA Pin	Net Name	I/O Standard	U58 BPI Flash Memory	
			Pin Number	Pin Name
W22	FLASH_A0	LVCMOS25	A1	A1
W21	FLASH_A1	LVCMOS25	B1	A2
V24	FLASH_A2	LVCMOS25	C1	A3
U24	FLASH_A3	LVCMOS25	D1	A4
V22	FLASH_A4	LVCMOS25	D2	A5
V21	FLASH_A5	LVCMOS25	A2	A6
U23	FLASH_A6	LVCMOS25	C2	A7
W24	FLASH_A7	LVCMOS25	A3	A8
W23	FLASH_A8	LVCMOS25	B3	A9
V20	FLASH_A9	LVCMOS25	C3	A10
V19	FLASH_A10	LVCMOS25	D3	A11
W26	FLASH_A11	LVCMOS25	C4	A12
V25	FLASH_A12	LVCMOS25	A5	A13
V30	FLASH_A13	LVCMOS25	B5	A14
V29	FLASH_A14	LVCMOS25	C5	A15
V27	FLASH_A15	LVCMOS25	D7	A16

Table 1-5: **BPI Flash Memory Connections to the FPGA *(Cont'd)***

U1 FPGA Pin	Net Name	I/O Standard	U58 BPI Flash Memory	
			Pin Number	Pin Name
P22	FLASH_A16	LVCMOS25	D8	A17
P21	FLASH_A17	LVCMOS25	A7	A18
N24	FLASH_A18	LVCMOS25	B7	A19
N22	FLASH_A19	LVCMOS25	C7	A20
N21	FLASH_A20	LVCMOS25	C8	A21
N20	FLASH_A21	LVCMOS25	A8	A22
N19	FLASH_A22	LVCMOS25	G1	A23
N26	FLASH_A23	LVCMOS25	H8	A24
M23	FLASH_A24	LVCMOS25	B6	A25
M22	FLASH_A25	LVCMOS25	B8	A26
P24	FLASH_D0	LVCMOS25	F2	DQ0
R25	FLASH_D1	LVCMOS25	E2	DQ1
R20	FLASH_D2	LVCMOS25	G3	DQ2
R21	FLASH_D3	LVCMOS25	E4	DQ3
T20	FLASH_D4	LVCMOS25	E5	DQ4
T21	FLASH_D5	LVCMOS25	G5	DQ5
T22	FLASH_D6	LVCMOS25	G6	DQ6
T23	FLASH_D7	LVCMOS25	H7	DQ7
U20	FLASH_D8	LVCMOS25	E1	DQ8
P29	FLASH_D9	LVCMOS25	E3	DQ9
R29	FLASH_D10	LVCMOS25	F3	DQ10
P27	FLASH_D11	LVCMOS25	F4	DQ11
P28	FLASH_D12	LVCMOS25	F5	DQ12
T30	FLASH_D13	LVCMOS25	H5	DQ13
P26	FLASH_D14	LVCMOS25	G7	DQ14
R26	FLASH_D15	LVCMOS25	E7	DQ15
U29	FLASH_WAIT	LVCMOS25	F7	WAIT
M25	FPGA_FWE_B	LVCMOS25	G8	WE_B
M24	FLASH_OE_B	LVCMOS25	F8	OE_B
B10	FPGA_CCLK	LVCMOS25	E6	CLK
U63.6	FLASH_CE_B	LVCMOS25	B4	CE_B

Table 1-5: **BPI Flash Memory Connections to the FPGA *(Cont'd)***

U1 FPGA Pin	Net Name	I/O Standard	U58 BPI Flash Memory	
			Pin Number	Pin Name
M30	FLASH_ADV_B	LVCMOS25	F6	ADV_B
A10	FPGA_INIT_B	LVCMOS25	D4	RST_B

Additional FPGA bitstreams can be stored and used for configuration by setting the Warm Boot Start Address (WBSTAR) register contained in 7 series FPGAs. More information is available in the reconfiguration and multiboot section in *7 Series FPGAs Configuration User Guide* (UG470) [Ref 3]. The configuration section in this document provides details on the Master BPI configuration mode.

The following figure shows the connections of the linear BPI flash memory on the KC705 board.

For more information about the Micron PC28F00AP30TF part, see [Ref 6].

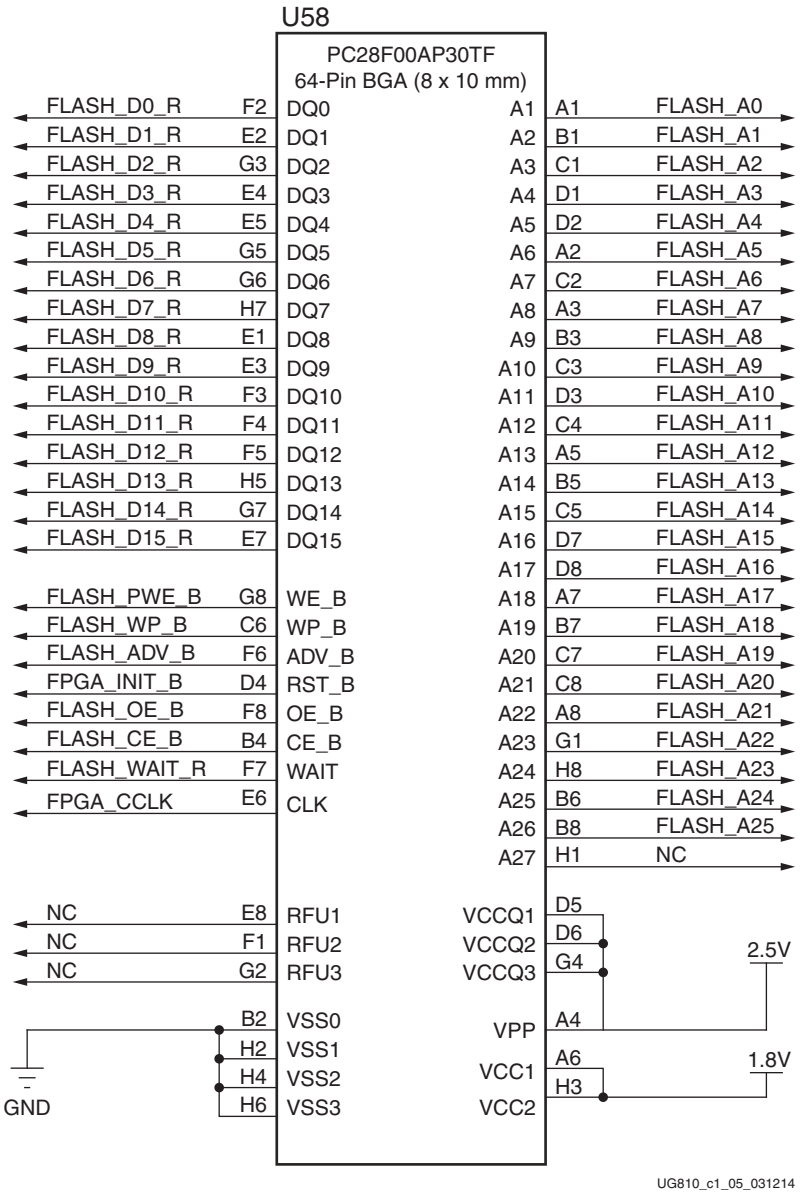

Figure 1-5: **128 MB Linear Flash Memory (U58)**

Quad SPI Flash Memory

[Figure 1-2, callout 4]

The Quad SPI flash memory located at U7 on the back side of the board provides 128 Mb of nonvolatile storage that can be used for configuration and data storage.

- Part number: Micron N25Q128A13BSF40F or MT25QL128ABA8ESF-0SIT
- Supply voltage: 2.8V
- Datapath width: 4 bits
- Data rate: Various depending on Single/Dual/Quad mode and CCLK rate

Four data lines and the FPGA CCLK pin are wired to the Quad SPI flash memory. A common chip select (FPGA_FCS) shared between the Linear BPI flash memory and the Quad SPI flash memory is controlled by the configuration mode settings on DIP switch SW13 position 5 (M0) and a one-of-two demultiplexer device U64. If mode pin M0 = 1, the SPI flash memory device is selected. If mode pin M0 = 0, the Linear BPI flash memory device is selected. The connections between the SPI flash memory and the FPGA are listed in the following table.

Table 1-6: **Quad SPI Flash Memory Connections to the FPGA**

U1 FPGA Pin	Net Name	I/O Standard	J1 DDR3 Memory	
			Pin Number	Pin Name
P24	FLASH_D0	LVCMOS25	15	DQ0
R25	FLASH_D1	LVCMOS25	8	DQ1
R20	FLASH_D2	LVCMOS25	9	DQ2
R21	FLASH_D3	LVCMOS25	1	DQ3
B10	FPGA_CCLK	N/A	16	C
U19	QSPI_IC_CS_B(1)	LVCMOS25	7	S_B

Notes:
1. FPGA_FCS connected to FPGA U1 pin U19 becomes QSPI_IC_CS_B through U64 and J3.

The configuration section of *7 Series FPGAs Configuration User Guide* (UG470) [Ref 3] provides details on using the Quad SPI flash memory. Figure 1-6 shows the connections of the Quad SPI flash memory on the KC705 board.

For more information about the Micron N25Q128A13BSF40F or MT25QL128ABA8ESF-0SIT parts, see [Ref 6].

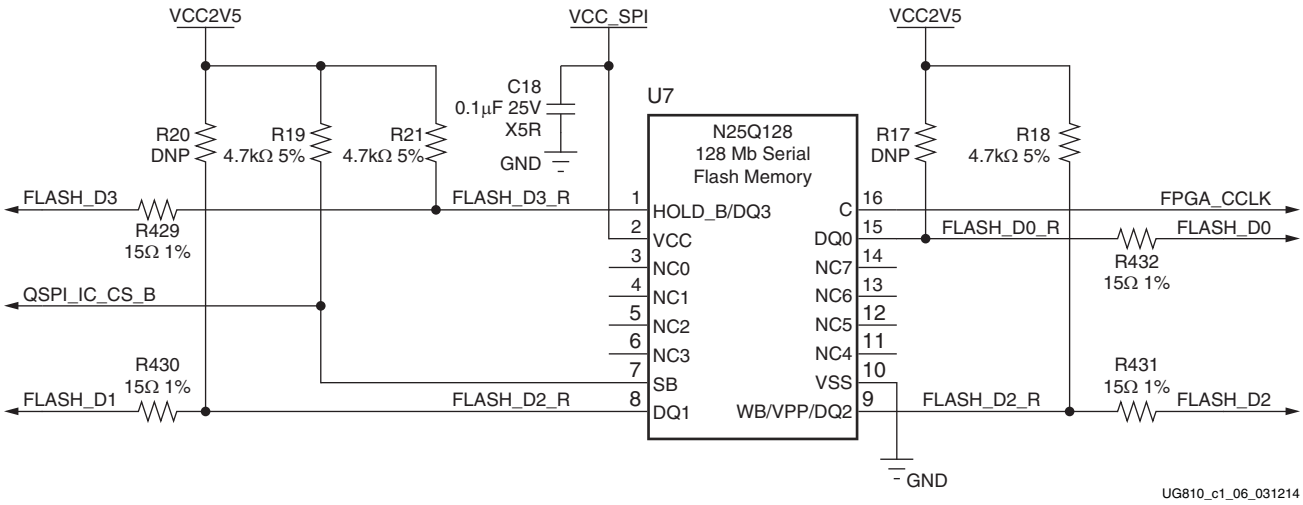

Figure 1-6: **128 Mb Quad SPI Flash Memory**

SD Card Interface

[Figure 1-2, callout 5]

The KC705 board includes a secure digital input/output (SDIO) interface to provide user-logic access to general purpose nonvolatile SDIO memory cards and peripherals. The SD card slot is designed to support 50 MHz high speed SD cards.

The SDIO signals are connected to I/O bank 12 which has its VCCO set to VADJ. A Texas Instruments I TXB0108 8-bit bidirectional voltage-level translator is used between the FPGA and the SD card connector (U9).

The following figure shows the connections of the SD card interface on the KC705 board.

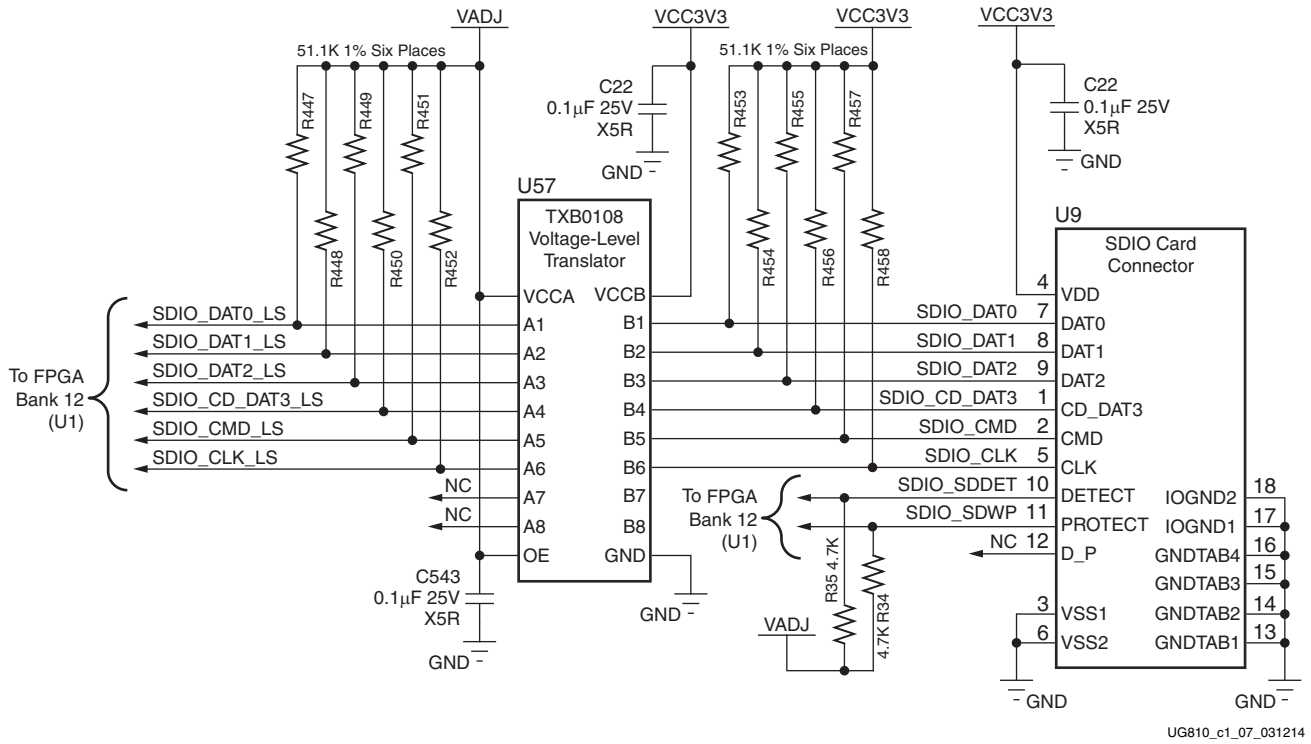

Figure 1-7: **SD Card Interface**

The following table lists the SD card interface connections to the FPGA.

Table 1-7: **SDIO Connections to the FPGA**

U1 FPGA Pin	Schematic Net Name	I/O Standard	U57 Level Shifter		U9 SDIO Connector	
			Pin Name (A)	Pin Name (B)	Pin Number	Pin Name
Y21	SDIO_SDWP	LVCMOS25	N/A	N/A	11	SDWP
AA21	SDIO_SDDET	LVCMOS25	N/A	N/A	10	SDDET
AB22	SDIO_CMD_LS	LVCMOS25	A5	B6	2	CMD
AB23	SDIO_CLK_LS	LVCMOS25	A6	B7	5	CLK
AA22	SDIO_DAT2_LS	LVCMOS25	A3	B4	9	DAT2
AA23	SDIO_DAT1_LS	LVCMOS25	A2	B3	8	DAT1
AC20	SDIO_DAT0_LS	LVCMOS25	A1	B1	7	DAT0
AC21	SDIO_CD_DAT3_LS	LVCMOS25	A4	B5	1	CD_DAT3

USB JTAG Module

[Figure 1-2, callout 6]

JTAG configuration is provided through a Digilent onboard USB-to-JTAG configuration logic module (U59) where a host computer accesses the KC705 board JTAG chain through a standard-A plug (host side) to micro-B plug (KC705 board side) USB cable.

A 2-mm JTAG header (J60) is also provided in parallel for access by Xilinx® download cables such as the Platform Cable USB II and the Parallel Cable IV.

The JTAG chain of the KC705 board is illustrated in Figure 1-8. JTAG configuration is allowed at any time regardless of FPGA mode pin settings. JTAG initiated configuration takes priority over the configuration method selected through the FPGA mode pin settings at SW13.

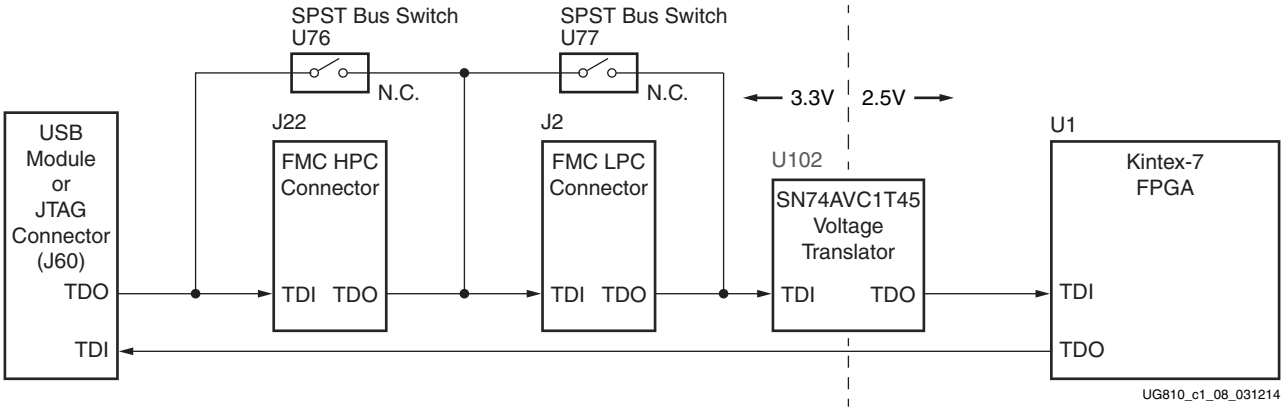

Figure 1-8: **JTAG Chain Block Diagram**

When an FMC card is attached to the KC705 board, it is automatically added to the JTAG chain through electronically controlled single-pole single-throw (SPST) switches U76 and U77. The SPST switches are in a normally closed state and transition to an open state when an FMC mezzanine card is attached. Switch U76 adds an attached FMC HPC mezzanine card to the FPGAs JTAG chain as determined by the FMC_HPC_PRSNT_M2C_B signal. Switch U77 adds an attached FMC HPC mezzanine card to the FPGAs JTAG chain as determined by the FMC_LPC_PRSNT_M2C_B signal. The attached FMC card must implement a TDI-to-TDO connection via a device or bypass jumper for the JTAG chain to be completed to the FPGA U1.

The JTAG connectivity on the KC705 board allows a host computer to download bitstreams to the FPGA using the Xilinx software. In addition, the JTAG connector allows debug tools or a software debugger to access the FPGA.

The Xilinx software tool can also indirectly program the Linear BPI or the Quad SPI flash memory. To accomplish this, the software configures the FPGA with a temporary design to access and program the BPI or Quad SPI flash memory device.

The JTAG circuit is shown in the figure below.

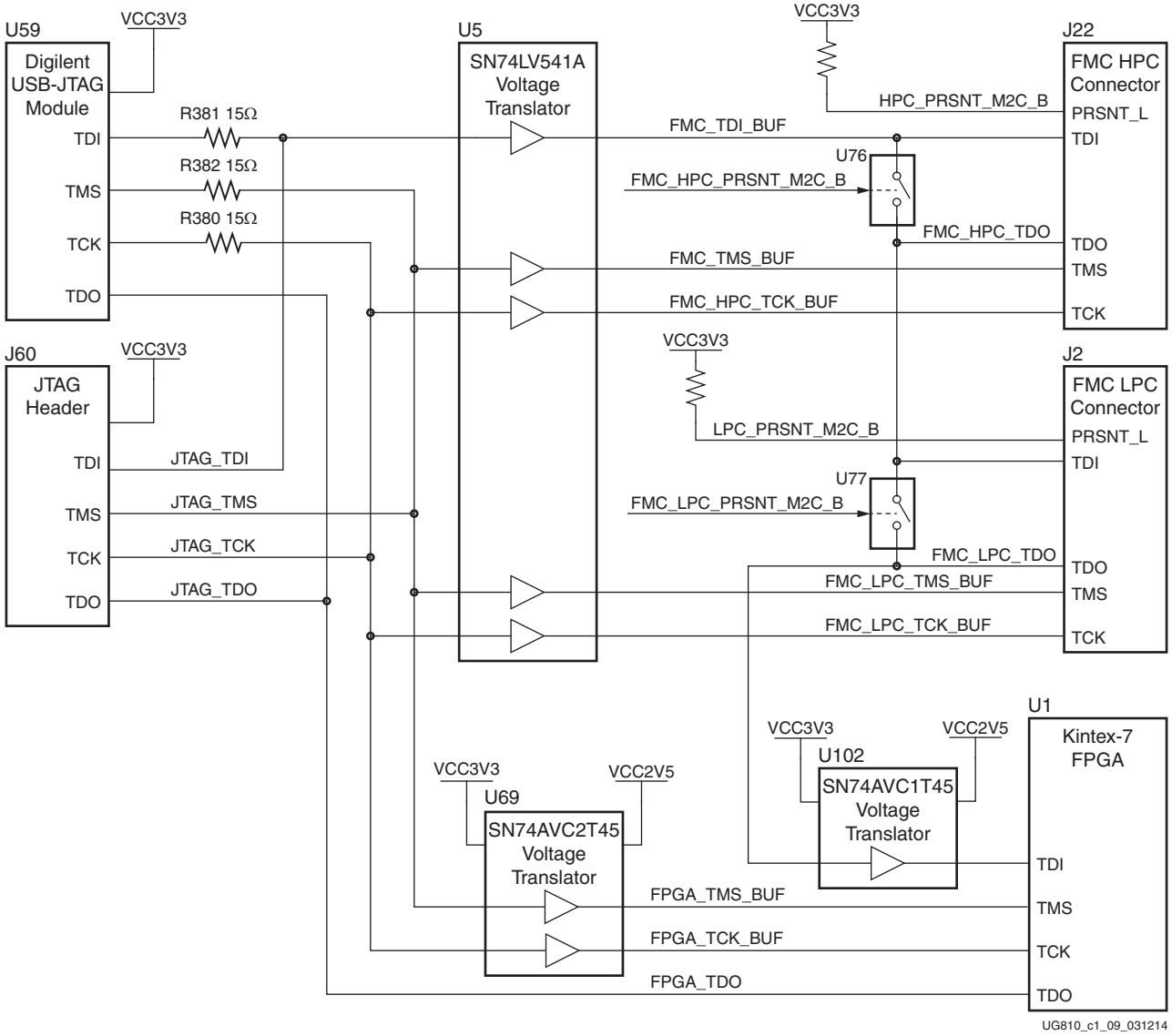

Figure 1-9: **JTAG Circuit**

Clock Generation

The following table lists the five clock sources available for the FPGA fabric on the KC705 board.

Table 1-8: **KC705 Board Clock Sources**

Clock Name	Reference	Description
System Clock	U6	SiT9102 2.5V LVDS 200 MHz Fixed Frequency Oscillator (Si Time). See System Clock Source.
User Clock	U45	Si570 3.3V LVDS I2C Programmable Oscillator (Silicon Labs). Default power-on frequency 156.250 MHz. See Programmable User Clock Source.
User SMA Clock (differential pair)	J11	USER_SMA_CLOCK_P (net name). See User SMA Clock Input.
	J12	USER_SMA_CLOCK_N (net name) See User SMA Clock Input
GTX SMA REF Clock (differential pair)	J16	SMA_MGT_REFCLK_P (net name). See GTX SMA Clock Input.
	J15	SMA_MGT_REFCLK_N (net name). See GTX SMA Clock Input.
Jitter Attenuated Clock	U70	Si5324C LVDS precision clock multiplier/jitter attenuator (Silicon Labs). See Jitter Attenuated Clock.

The following table lists the pin-to-pin connections from each clock source to the FPGA.

Table 1-9: **Clock Source to FPGA U1 Connections**

Clock Source Pin	Schematic Net Name	I/O Standard	U1 FPGA Pin
U6.5	SYSCLK_N	LVDS	AD11
U6.4	SYSCLK_P	LVDS	AD12
U45.5	USER_CLOCK_N	LVDS_25	K29
U45.4	USER_CLOCK_P	LVDS_25	K28
J12.1	USER_SMA_CLOCK_N	LVDS_25	K25
J11.1	USER_SMA_CLOCK_P	LVDS_25	L25
J15.1	SMA_MGT_REFCLK_N	N/A (MGT REFCLK INPUT)	J7
J16.1	SMA_MGT_REFCLK_P	N/A (MGT REFCLK INPUT)	J8
U70.29	Si5326_OUT_N	N/A (MGT REFCLK INPUT)	L7
U70.28	Si5326_OUT_P	N/A (MGT REFCLK INPUT)	L8

System Clock Source

[Figure 1-2, callout 7]

The KC705 board has a 2.5V LVDS differential 200 MHz oscillator (U6) soldered onto the back side of the board and wired to an FPGA MRCC clock input on bank 33. This 200 MHz signal pair is named SYSCLK_P and SYSCLK_N, which are connected to FPGA U1 pins AD12 and AD11 respectively.

- Oscillator: Si Time SiT9102AI-243N25E200.00000 (200 MHz)
- PPM frequency jitter: 50 ppm
- Differential Output

The system clock circuit is shown in the figure below.

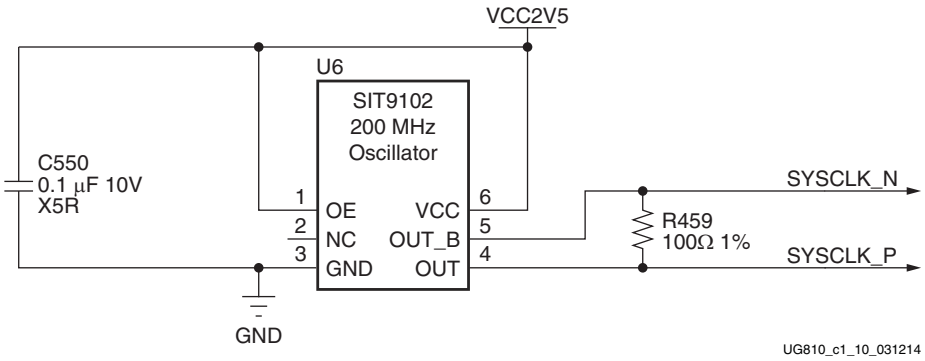

Figure 1-10: **System Clock Source**

For more about the Si Time SiT9102, see [Ref 7].

Programmable User Clock Source

[Figure 1-2, callout 8]

The KC705 board has a programmable low-jitter 3.3V differential oscillator (U45) the FPGA MRCC inputs of bank 15. This USER_CLOCK_P and USER_CLOCK_N clock signal pair are connected to FPGA U1 pins K28 and K29 respectively. On power-up the user clock defaults to an output frequency of 156.250 MHz. User applications can change the output frequency within the range of 10 MHz to 810 MHz through an I2C interface. Power cycling the KC705 board reverts the user clock to its default frequency of 156.250 MHz.

- Programmable Oscillator: Silicon Labs Si570BAB0000544DG (10 MHz - 810 MHz)
- Differential Output
- I2C address `0x5D`

The user clock circuit is shown in the figure below.

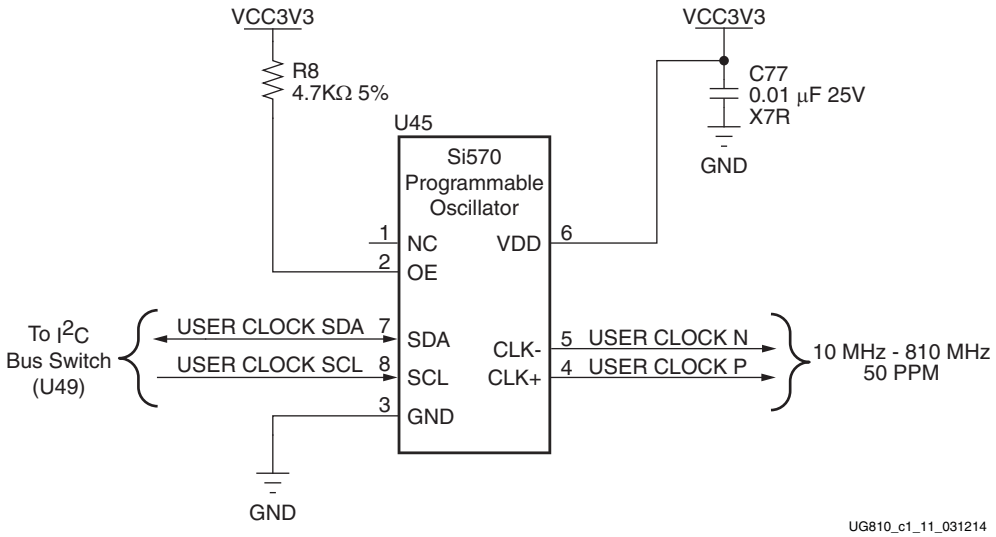

Figure 1-11: **User Clock Source**

For more information about the Silicon Labs Si570, see [Ref 8].

Reference design files are available to demonstrate how to program the Si570 programmable oscillator. See these files and presentations:

- XTP186, *KC705 Si570 Programming* [Ref 9]
- RDF0175, *KC705 Si570 Programming Design Files* [Ref 10]
- XTP187, *KC705 Si570 Fixed Frequencies* [Ref 11]
- RDF0176, *KC705 Si570 Fixed Frequencies Design Files* [Ref 12]

User SMA Clock Input

[Figure 1-2, callout 9]

An external high-precision clock signal can be provided to the FPGA bank 15 by connecting differential clock signals through the onboard 50Ω SMA connectors J11 (P) and J12 (N). The differential clock has signal names are USER_SMA_CLOCK_P and USER_SMA_CLOCK_N, which are connected to FPGA U1 pins L25 and K25, respectively. J11 (P) and J12 (N) are connected directly to the noted FPGA pins (no series capacitors and no external parallel

termination resistor). The user-provided 2.5V differential clock circuit is shown in the figure below.

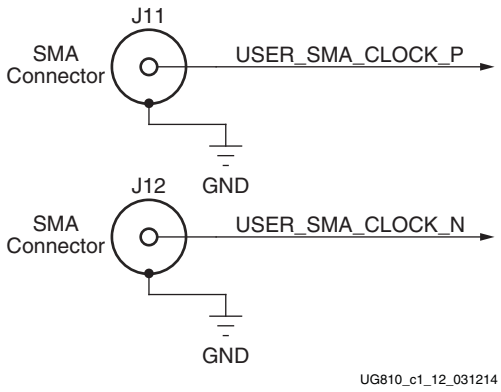

Figure 1-11: **User SMA Clock Source**

GTX SMA Clock Input

[Figure 1-2, callout 10]

The KC705 board includes a pair of SMA connectors for a GTX clock wired to GTX Quad bank 117. This differential clock has signal names SMA_MGT_REFCLK_P and SMA_REFCLK_N, which are connected to FPGA U1 pins J8 and J7 respectively. Figure 1-12 shows this AC-coupled clock circuit.

- External user-provided GTX reference clock on SMA input connectors
- Differential Input

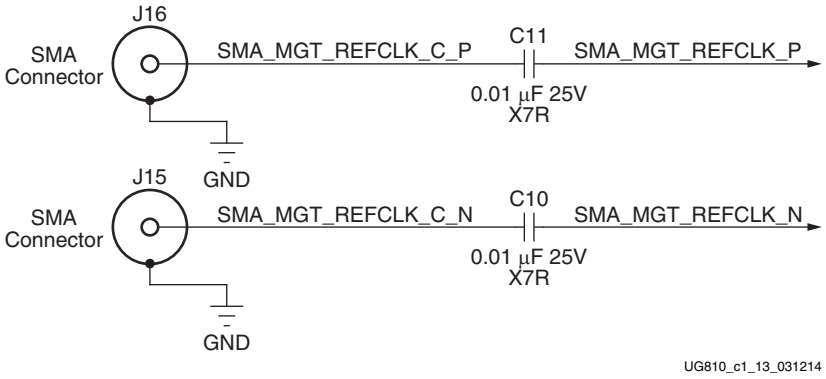

Figure 1-12: **GTX SMA Clock Source**

Jitter Attenuated Clock

[Figure 1-2, callout 11]

The KC705 board includes a Silicon Labs Si5324 jitter attenuator U70 on the back side of the board. FPGA user logic can implement a clock recovery circuit and then output this clock to a differential I/O pair on I/O bank 13 (REC_CLOCK_C_P, FPGA U1 pin W27 and REC_CLOCK_C_N, FPGA U1 pin W28) for jitter attenuation. The jitter attenuated clock (SI5326_OUT_C_P, SI5326_OUT_C_N) is then routed as a reference clock to GTX Quad 116 inputs MGTREFCLK0P (FPGA U1 pin L8) and MGTREFCLK0N (FPGA U1 pin L7).

The Silicon Labs Si5324 U70 pin 1 reset net SI5326_RST must be driven High to enable the device. U70 pin 1 net SI5326_RST is level-shifted to VADJ by U75 and is connected to U1 bank 12 pin AE20. An active-Low input performs an external hardware reset of the device. This resets all internal logic to a known state and forces the device registers to their default value. The clock outputs are disabled during reset. The part must be programmed after a reset or power-up to get a clock output. The reset pin 1 has a weak internal pull-up.

The primary purpose of this clock is to support CPRI/OBSAI applications that perform clock recovery from a user-supplied SFP/SFP+ module and use the jitter attenuated recovered clock to drive the reference clock inputs of a GTX transceiver. The jitter attenuated clock circuit is shown in Figure 1-13.

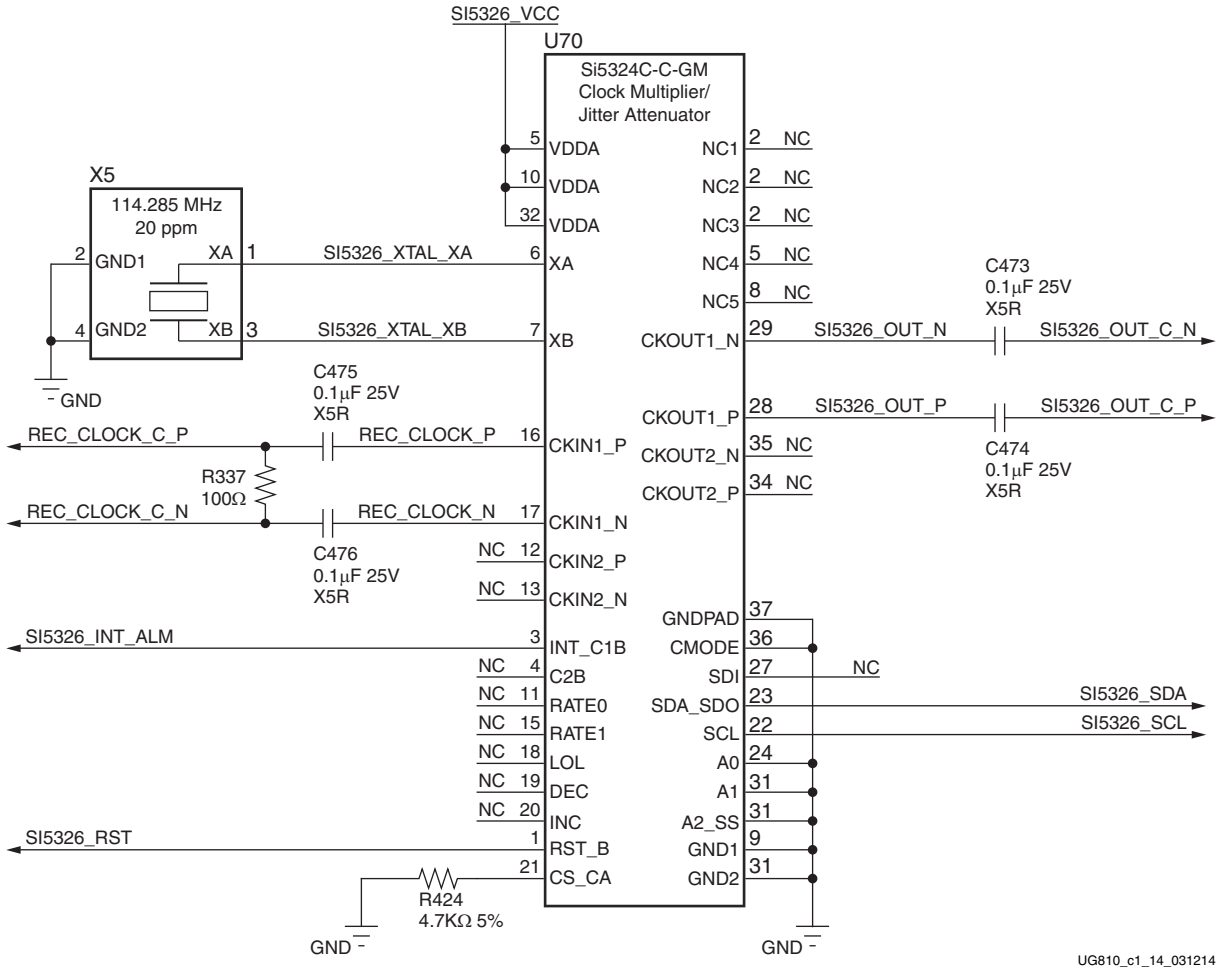

Figure 1-13: **Jitter Attenuated Clock**

For more information about the Silicon Labs Si5324, see [Ref 8].

GTX Transceivers

[Figure 1-2, callout 12]

The KC705 board provides access to 16 GTX transceivers:

- Eight of the GTX transceivers are wired to the PCI Express® x8 endpoint edge connector (P1) fingers
- Four of the GTX transceivers are wired to the FMC HPC connector (J22)
- One GTX is wired to the FMC LPC connector (J2)
- One GTX is wired to SMA connectors (RX: J17, J18 TX: J19, J20)
- One GTX is wired to the SFP/SFP+ Module connector (P5)
- One GTX is used for the SGMII connection to the Ethernet PHY (U37)

The GTX transceivers in 7 series FPGAs are grouped into four channels described as Quads. The reference clock for a Quad can be sourced from the Quad above or Quad below the GTX Quad of interest. There are four GTX Quads on the KC705 board with connectivity as shown here:

- Quad 115:
  - Contains 4 GTX transceivers for PCI Express lanes 4-7
  - MGTREFCLK1 - PCIE_CLK from P1
- Quad 116:
  - MGTREFCLK0 - Si5326 jitter attenuator
  - MGTREFCLK1 - FMC LPC GBT clock 0
  - Contains 4 GTX transceivers for PCIe lanes 0-3
- Quad 117:
  - MGTREFCLK0 - SGMII clock
  - MGTREFCLK1 - SMA clock
  - Contains 4 GTX transceivers with one allocated for: SMA, SGMII, SFP, and FMC LPC (DP0)
- Quad 118:
  - MGTREFCLK0 - FMC HPC GBT clock 0
  - MGTREFCLK1 - FMC HPC GBT clock 1
  - Contains 4 GTX transceivers for FMC HPC (DP0 - DP3)

The following table lists the GTX interface connections to the FPGA (U1).

Table 1-10: **GTX Interface Connections for FPGA U1**

Transceiver Bank	Associated Net Name	Connections
MGT_BANK_115	GTXE2_CHANNEL_X0Y0	PCIe7
	GTXE2_CHANNEL_X0Y1	PCIe6
	GTXE2_CHANNEL_X0Y2	PCIe5
	GTXE2_CHANNEL_X0Y3	PCIe4
	MGTREFCLK0	N/C
	MGTREFCLK1	PCIe_CLK

Table 1-10: **GTX Interface Connections for FPGA U1 *(Cont'd)***

Transceiver Bank	Associated Net Name	Connections
MGT_BANK_116	GTXE2_CHANNEL_X0Y4	PCIe3
	GTXE2_CHANNEL_X0Y5	PCIe2
	GTXE2_CHANNEL_X0Y6	PCIe1
	GTXE2_CHANNEL_X0Y7	PCIe0
	MGTREFCLK0	Si5326
	MGTREFCLK1	FMC LPC GBT_CLK0
MGT_BANK_117	GTXE2_CHANNEL_X0Y8	SMA
	GTXE2_CHANNEL_X0Y9	SGMII
	GTXE2_CHANNEL_X0Y10	SFP+
	GTXE2_CHANNEL_X0Y11	FMC LPC DP0
	MGTREFCLK0	SGMII_CLK
	MGTREFCLK1	SMA_CLK
MGT_BANK_118	GTXE2_CHANNEL_X0Y12	FMC HPC DP0
	GTXE2_CHANNEL_X0Y13	FMC HPC DP1
	GTXE2_CHANNEL_X0Y14	FMC HPC DP2
	GTXE2_CHANNEL_X0Y15	FMC HPC DP3
	MGTREFCLK0	FMC HPC GBT_CLK0
	MGTREFCLK1	FMC HPC GBT_CLK1

For more information on the GTX transceivers, see *7 Series FPGAs GTX Transceivers User Guide* (UG476) [Ref 13].

PCI Express Edge Connector

[Figure 1-2, callout 13]

The 8-lane PCI Express edge connector performs data transfers at the rate of 2.5 GT/s for a Gen1 application and 5.0 GT/s for a Gen2 application. The PCIe transmit and receive signal datapaths have a characteristic impedance of 85Ω ±10%. The PCIe clock is routed as a 100Ω differential pair. The 7 series FPGAs GTX transceivers are used for multi-gigabit per second serial interfaces.

The XC7K325T-2FFG900C FPGA (-2 speed grade) included with the KC705 board supports up to Gen2 x8.

The PCIe clock is input from the edge connector. It is AC coupled to the FPGA through the MGTREFCLK1 pins of Quad 115. PCIE_CLK_Q0_P is connected to FPGA U1 pin U8, and the _N net is connected to pin U7. The PCI Express clock circuit is shown in Figure 1-14.

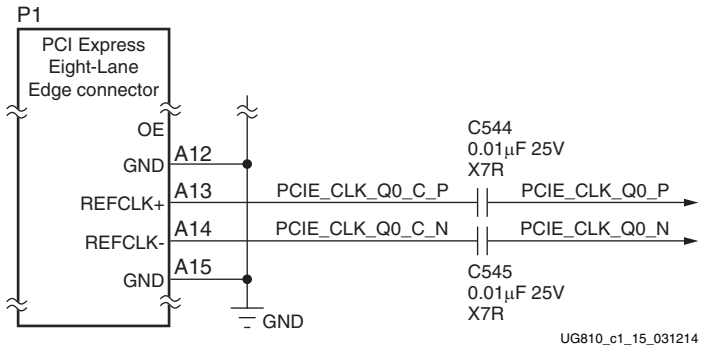

Figure 1-14: **PCI Express Clock**

PCIe lane width/size is selected via jumper J32 (Figure 1-15). The default lane size selection is 8-lane (J32 pins 5 and 6 jumpered).

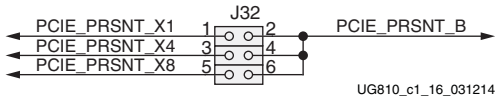

Figure 1-15: **PCI Express Lane Size Select Jumper J32**

The following table lists the PCIe edge connector connections.

Table 1-11: **PCIe Edge Connector Connections**

Schematic Net Name	FPGA Pin (U1)	PCIe Edge Connector Pin	PCIe Edge Pin Name	Function	FFG900 Placement
PCIE_RX0_P	M6	B14	PETp0	Integrated Endpoint block receive pair	GTXE2_CHANNEL_X0Y7
PCIE_RX0_N	M5	B15	PETn0	Integrated Endpoint block receive pair	GTXE2_CHANNEL_X0Y7
PCIE_RX1_P	P6	B19	PETp1	Integrated Endpoint block receive pair	GTXE2_CHANNEL_X0Y6
PCIE_RX1_N	P5	B20	PETn1	Integrated Endpoint block receive pair	GTXE2_CHANNEL_X0Y6
PCIE_RX2_P	R4	B23	PETp2	Integrated Endpoint block receive pair	GTXE2_CHANNEL_X0Y5
PCIE_RX2_N	R3	B24	PETn2	Integrated Endpoint block receive pair	GTXE2_CHANNEL_X0Y5
PCIE_RX3_P	T6	B27	PETp3	Integrated Endpoint block receive pair	GTXE2_CHANNEL_X0Y4

Table 1-11: **PCIe Edge Connector Connections *(Cont'd)***

Schematic Net Name	FPGA Pin (U1)	PCIe Edge Connector Pin	PCIe Edge Pin Name	Function	FFG900 Placement
PCIE_RX3_N	T5	B28	PETn3	Integrated Endpoint block receive pair	GTXE2_CHANNEL_X0Y4
PCIE_RX4_P	V6	B33	PETp4	Integrated Endpoint block receive pair	GTXE2_CHANNEL_X0Y3
PCIE_RX4_N	V5	B34	PETn4	Integrated Endpoint block receive pair	GTXE2_CHANNEL_X0Y3
PCIE_RX5_P	W4	B37	PETp5	Integrated Endpoint block receive pair	GTXE2_CHANNEL_X0Y2
PCIE_RX5_N	W3	B38	PETn5	Integrated Endpoint block receive pair	GTXE2_CHANNEL_X0Y2
PCIE_RX6_P	Y6	B41	PETp6	Integrated Endpoint block receive pair	GTXE2_CHANNEL_X0Y1
PCIE_RX6_N	Y5	B42	PETn6	Integrated Endpoint block receive pair	GTXE2_CHANNEL_X0Y1
PCIE_RX7_P	AA4	B45	PETp7	Integrated Endpoint block receive pair	GTXE2_CHANNEL_X0Y0
PCIE_RX7_N	AA3	B46	PETn7	Integrated Endpoint block receive pair	GTXE2_CHANNEL_X0Y0
PCIE_TX0_P	L4	A16	PERp0	Integrated Endpoint block transmit pair	GTXE2_CHANNEL_X0Y7
PCIE_TX0_N	L3	A17	PERn0	Integrated Endpoint block transmit pair	GTXE2_CHANNEL_X0Y7
PCIE_TX1_P	M2	A21	PERp1	Integrated Endpoint block transmit pair	GTXE2_CHANNEL_X0Y6
PCIE_TX1_N	M1	A22	PERn1	Integrated Endpoint block transmit pair	GTXE2_CHANNEL_X0Y6
PCIE_TX2_P	N4	A25	PERp2	Integrated Endpoint block transmit pair	GTXE2_CHANNEL_X0Y5
PCIE_TX2_N	N3	A26	PERn2	Integrated Endpoint block transmit pair	GTXE2_CHANNEL_X0Y5
PCIE_TX3_P	P2	A29	PERp3	Integrated Endpoint block transmit pair	GTXE2_CHANNEL_X0Y4
PCIE_TX3_N	P1	A30	PERn3	Integrated Endpoint block transmit pair	GTXE2_CHANNEL_X0Y4
PCIE_TX4_P	T2	A35	PERp4	Integrated Endpoint block transmit pair	GTXE2_CHANNEL_X0Y3
PCIE_TX4_N	T1	A36	PERn4	Integrated Endpoint block transmit pair	GTXE2_CHANNEL_X0Y3

Table 1-11: **PCIe Edge Connector Connections *(Cont'd)***

Schematic Net Name	FPGA Pin (U1)	PCIe Edge Connector Pin	PCIe Edge Pin Name	Function	FFG900 Placement
PCIE_TX5_P	U4	A39	PERp5	Integrated Endpoint block transmit pair	GTXE2_CHANNEL_X0Y2
PCIE_TX5_N	U3	A40	PERn5	Integrated Endpoint block transmit pair	GTXE2_CHANNEL_X0Y2
PCIE_TX6_P	V2	A43	PERp6	Integrated Endpoint block transmit pair	GTXE2_CHANNEL_X0Y1
PCIE_TX6_N	V1	A44	PERn6	Integrated Endpoint block transmit pair	GTXE2_CHANNEL_X0Y1
PCIE_TX7_P	Y2	A47	PERp7	Integrated Endpoint block transmit pair	GTXE2_CHANNEL_X0Y0
PCIE_TX7_N	Y1	A48	PERn7	Integrated Endpoint block transmit pair	GTXE2_CHANNEL_X0Y0
PCIE_CLK_QO_P	U8	A13	REFCLK+	Integrated Endpoint block differential clock pair from PCIe	MGT_BANK_115
PCIE_CLK_QO_N	U7	A14	REFCLK-	Integrated Endpoint block differential clock pair from PCIe	MGT_BANK_115
PCIE_PRSNT_B	J32 2, 4, 6	A1	PRSNT#1	J42 Lane Size Select jumper	N/A
PCIE_WAKE_B	F23	B11	WAKE#	Integrated Endpoint block wake signal, not connected on KC705 board	N/A
PCIE_PERST_B	G25	A11	PERST	Integrated Endpoint block reset signal	N/A

The following table lists the PCIe edge connector connections for Quad 115.

Table 1-12: **GTX Quad 115 PCIe Edge Connector Connections**

Quad 115 Pin Name	FPGA Pin (U1)	Schematic Net Name	PCIe Edge Connector Pin	PCIe Edge Pin Name	FFG900 Placement
MGTXTXP0_115_Y2	Y2	PCIE_TX7_P	A47	PERp7	GTXE2_CHANNEL_X0Y0
MGTXTXN0_115_Y1	Y1	PCIE_TX7_N	A48	PERn7	GTXE2_CHANNEL_X0Y0
MGTXRXP0_115_AA4	AA4	PCIE_RX7_P	B45	PETp7	GTXE2_CHANNEL_X0Y0
MGTXRXN0_115_AA3	AA3	PCIE_RX7_N	B46	PETn7	GTXE2_CHANNEL_X0Y0
MGTXTXP1_115_V2	V2	PCIE_TX6_P	A43	PERp6	GTXE2_CHANNEL_X0Y1
MGTXTXN1_115_V1	V1	PCIE_TX6_N	A44	PERn6	GTXE2_CHANNEL_X0Y1
MGTXRXP1_115_Y6	Y6	PCIE_RX6_P	B41	PETp6	GTXE2_CHANNEL_X0Y1
MGTXRXN1_115_Y5	Y5	PCIE_RX6_N	B42	PETn6	GTXE2_CHANNEL_X0Y1

Table 1-12: **GTX Quad 115 PCIe Edge Connector Connections *(Cont'd)***

Quad 115 Pin Name	FPGA Pin (U1)	Schematic Net Name	PCIe Edge Connector Pin	PCIe Edge Pin Name	FFG900 Placement
MGTXTXP2_115_U4	U4	PCIE_TX5_P	A39	PERp5	GTXE2_CHANNEL_X0Y2
MGTXTXN2_115_U3	U3	PCIE_TX5_N	A40	PERn5	GTXE2_CHANNEL_X0Y2
MGTXRXP2_115_W4	W4	PCIE_RX5_P	B37	PETp5	GTXE2_CHANNEL_X0Y2
MGTXRXN2_115_W3	W3	PCIE_RX5_N	B38	PETn5	GTXE2_CHANNEL_X0Y2
MGTXTXP3_115_T2	T2	PCIE_TX4_P	A35	PERp4	GTXE2_CHANNEL_X0Y3
MGTXTXN3_115_T1	T1	PCIE_TX4_N	A36	PERn4	GTXE2_CHANNEL_X0Y3
MGTXRXP3_115_V6	V6	PCIE_RX4_P	B33	PETp4	GTXE2_CHANNEL_X0Y3
MGTXRXN3_115_V5	V5	PCIE_RX4_N	B34	PETn4	GTXE2_CHANNEL_X0Y3
MGTREFCLK0P_115_R8	R8	NC			MGT_BANK_115
MGTREFCLK0N_115_R7	R7	NC			MGT_BANK_115
MGTREFCLK1P_115_U8	U8	PCIE_CLK_QO_P	A13	REFCLK+	MGT_BANK_115
MGTREFCLK1N_115_U7	U7	PCIE_CLK_QO_N	A14	REFCLK-	MGT_BANK_115
MGTAVTTRCAL_115_W7	W7	MGTAVTT			MGT_BANK_115
MGTRREF_115_W8	W8	100 ohm P/U to MGTAVTT			MGT_BANK_115

The following table lists the PCIe edge connector connections for Quad 116.

Table 1-13: **GTX Quad 116 to PCIe Edge Connector Connections**

Quad 116 Pin Name	FPGA Pin (U1)	Schematic Net Name	PCIe Edge Connector Pin	PCIe Edge in Name	FFG900 Placement
MGTXTXP0_116_P2	P2	PCIE_TX3_P	A29	PERp3	GTXE2_CHANNEL_X0Y4
MGTXTXN0_116_P1	P1	PCIE_TX3_N	A30	PERn3	GTXE2_CHANNEL_X0Y4
MGTXRXP0_116_T6	T6	PCIE_RX3_P	B27	PETp3	GTXE2_CHANNEL_X0Y4
MGTXRXN0_116_T5	T5	PCIE_RX3_N	B28	PETn3	GTXE2_CHANNEL_X0Y4
MGTXTXP1_116_N4	N4	PCIE_TX2_P	A25	PERp2	GTXE2_CHANNEL_X0Y5
MGTXTXN1_116_N3	N3	PCIE_TX2_N	A26	PERn2	GTXE2_CHANNEL_X0Y5
MGTXRXP1_116_R4	R4	PCIE_RX2_P	B23	PETp2	GTXE2_CHANNEL_X0Y5
MGTXRXN1_116_R3	R3	PCIE_RX2_N	B24	PETn2	GTXE2_CHANNEL_X0Y5
MGTXTXP2_116_M2	M2	PCIE_TX1_P	A21	PERp1	GTXE2_CHANNEL_X0Y6
MGTXTXN2_116_M1	M1	PCIE_TX1_N	A22	PERn1	GTXE2_CHANNEL_X0Y6

Table 1-13: **GTX Quad 116 to PCIe Edge Connector Connections *(Cont'd)***

Quad 116 Pin Name	FPGA Pin (U1)	Schematic Net Name	PCIe Edge Connector Pin	PCIe Edge in Name	FFG900 Placement
MGTXRXP2_116_P6	P6	PCIE_RX1_P	B19	PETp1	GTXE2_CHANNEL_X0Y6
MGTXRXN2_116_P5	P5	PCIE_RX1_N	B20	PETn1	GTXE2_CHANNEL_X0Y6
MGTXTXP3_116_L4	L4	PCIE_TX0_P	A16	PERp0	GTXE2_CHANNEL_X0Y7
MGTXTXN3_116_L3	L3	PCIE_TX0_N	A17	PERn0	GTXE2_CHANNEL_X0Y7
MGTXRXP3_116_M6	M6	PCIE_RX0_P	B14	PETp0	GTXE2_CHANNEL_X0Y7
MGTXRXN3_116_M5	M5	PCIE_RX0_N	B15	PETn0	GTXE2_CHANNEL_X0Y7
MGTREFCLK0P_116_L8	L8	SI5326_OUT_C_P			MGT_BANK_116
MGTREFCLK0N_116_L7	L7	SI5326_OUT_C_N			MGT_BANK_116
MGTREFCLK1P_116_N8	N8	FMC_LPC_GBTCLK0_M2C_C_P			MGT_BANK_116
MGTREFCLK1N_116_N7	N7	FMC_LPC_GBTCLK0_M2C_C_N			MGT_BANK_116

For more information, see the *7 Series FPGAs GTX Transceivers User Guide* (UG476) [Ref 13] and the *7 Series FPGAs Integrated Block for PCI Express LogiCORE IP Product Guide* (PG054) [Ref 14].

SFP/SFP+ Connector

[Figure 1-2, callout 14]

The KC705 board contains a small form-factor pluggable (SFP+) connector and cage assembly that accepts SFP or SFP+ modules. The figure below shows the SFP+ module connector circuitry.

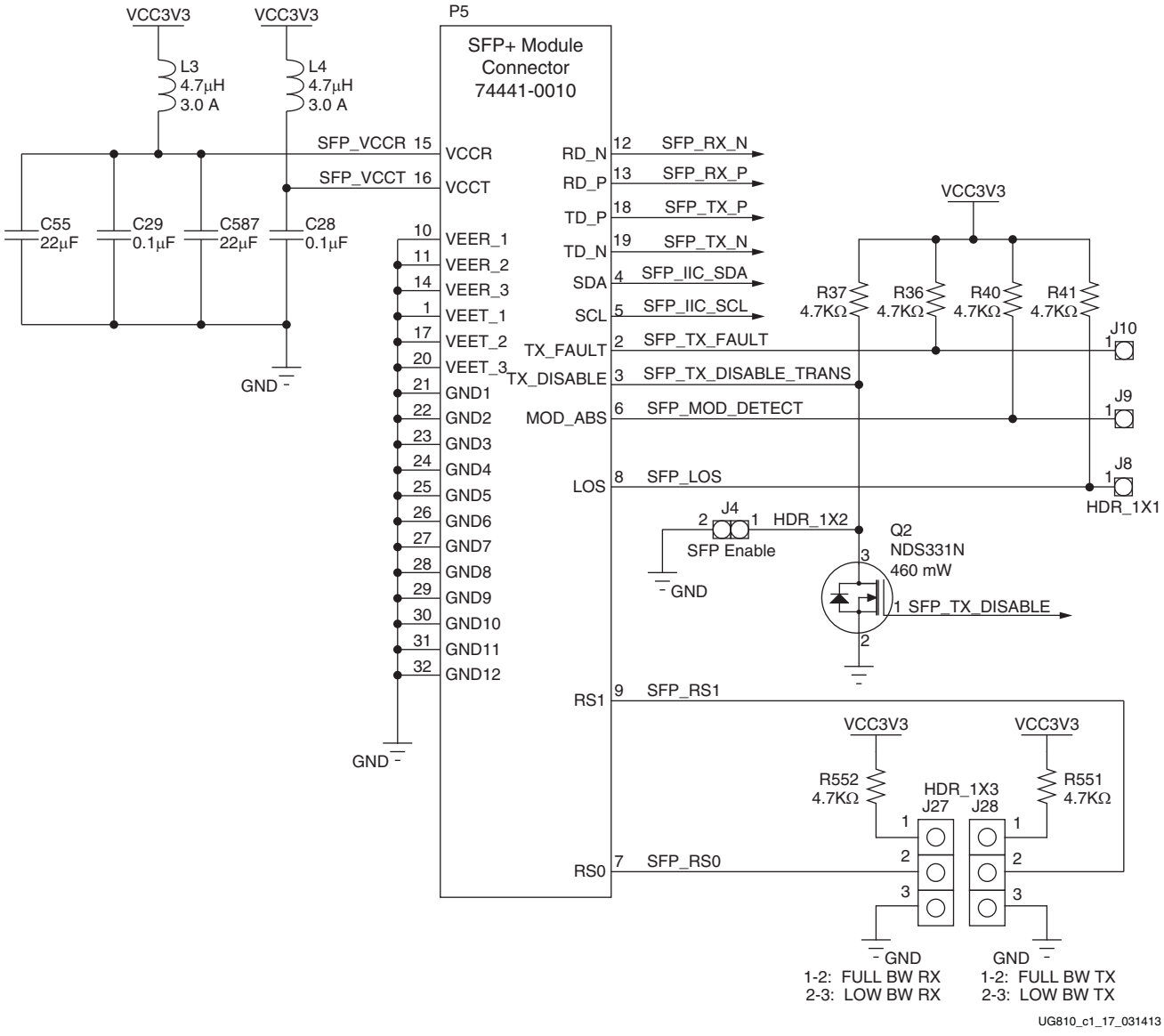

Figure 1-16: **SFP+ Module Connector**

The following table lists the SFP+ module RX and TX connections to the FPGA.

Table 1-14: **FPGA U1 to SFP+ Module Connections**

FPGA Pin (U1)	Schematic Net Name	SFP+ Pin (P5)	SFP+ Pin Name (P5)
G3	SFP_RX_N	12	RD_N(1)
G4	SFP_RX_P	13	RD_P(1)
H1	SFP_TX_N	19	TX_N(2)
H2	SFP_TX_P	18	TX_P(2)
Y20	SFP_TX_DISABLE_TRANS(3)	3	TX_DISABLE

Notes:

1. On KC705 boards prior to Rev 1.1, SFP+ connector P5 pin 18 RD_P is connected to net SFP_RX_N, and pin 19 RD_N is connected to net SFP_RX_P.
2. On KC705 boards prior to Rev 1.1, SFP+ connector P5 pin 18 TD_P is connected to net SFP_TX_N, and pin 19 TD_N is connected to net SFP_TX_P.
3. SFP_TX_DISABLE_TRANS I/O standard = LVCMOS25.

The following table lists the SFP+ module control and status connections to the FPGA.

Table 1-15: **SFP+ Module Control and Status**

SFP Control/Status Signal	Board Connection
SFP_TX_FAULT	Test Point J10
	High = Fault
	Low = Normal Operation
SFP_TX_DISABLE	**Jumper J4**
	Off = FP Disabled
	On = SFP Enabled
SFP_MOD_DETECT	Test Point J9
	High = Module Not Present
	Low = Module Present
SFP_RS0	**Jumper J27**
	Jumper Pins 1-2 = Full RX Bandwidth
	Jumper Pins 2-3 = Reduced RX Bandwidth
SFP_RS1	**Jumper J28**
	Jumper Pins 1-2 = Full TX Bandwidth
	Jumper Pins 2-3 = Reduced TX Bandwidth

Table 1-15: **SFP+ Module Control and Status *(Cont'd)***

SFP Control/Status Signal	Board Connection
SFP_LOS	Test Point J8
	High = Loss of Receiver Signal
	Low = Normal Operation

Notes:
1. Default jumper shunt positions are shown in bold text.

10/100/1000 Tri-Speed Ethernet PHY

[Figure 1-2, callout 15]

The KC705 board utilizes the Marvell Alaska PHY device (88E1111) U37 for Ethernet communications at 10, 100, or 1000 Mb/s. The board supports MII, GMII, RGMII, and SGMII interfaces from the FPGA to the PHY (Table 1-16). The PHY connection to a user-provided Ethernet cable is through a Halo HFJ11-1G01E RJ-45 connector (P3) with built-in magnetics.

Table 1-16: **PHY Default Interface Mode**

Mode	Jumper Settings		
	J29	J30	J64
GMII/MII to copper (default)	Jumper over pins 1-2	Jumper over pins 1-2	No jumper
SGMII to copper, no clock	Jumper over pins 2-3	Jumper over pins 2-3	No jumper
RGMII	Jumper over pins 1-2	No jumper	Jumper on

On power-up, or on reset, the PHY is configured to operate in GMII mode with PHY address `0b00111` using the settings shown in the table below. These settings can be overwritten via software commands passed over the MDIO interface.

Table 1-17: **Board Connections for PHY Configuration Pins**

Pin	Connection on Board	Bit[2] Definition and Value	Bit[1] Definition and Value	Bit[0] Definition and Value
CFG0	V_{CC} 2.5V	PHYADR[2] = 1	PHYADR[1] = 1	PHYADR[0] = 1
CFG1	Ground	ENA_PAUSE = 0	PHYADR[4] = 0	PHYADR[3] = 0
CFG2	V_{CC} 2.5V	ANEG[3] = 1	ANEG[2] = 1	ANEG[1] = 1
CFG3	V_{CC} 2.5V	ANEG[0] = 1	ENA_XC = 1	DIS_125 = 1
CFG4	V_{CC} 2.5V	HWCFG_MD[2] = 1	HWCFG_MD[1] = 1	HWCFG_MD[0] = 1
CFG5	V_{CC} 2.5V	DIS_FC = 1	DIS_SLEEP = 1	HWCFG_MD[3] = 1
CFG6	PHY_LED_RX	SEL_BDT = 0	INT_POL = 1	75/50Ω= 0

SGMII GTX Transceiver Clock Generator

[Figure 1-2, callout 16]

An Integrated Circuit Systems ICS844021I chip (U2) generates a high-quality, low-jitter, 125 MHz LVDS clock from a 25 MHz crystal (X3). This clock is sent to FPGA U1, bank 117 GTX transceiver (clock pins G8 (P) and G7 (N)) driving the SGMII interface. Series AC coupling capacitors are present to allow the clock input of the FPGA to set the common mode voltage. The following figure shows the Ethernet SGMII clock source.

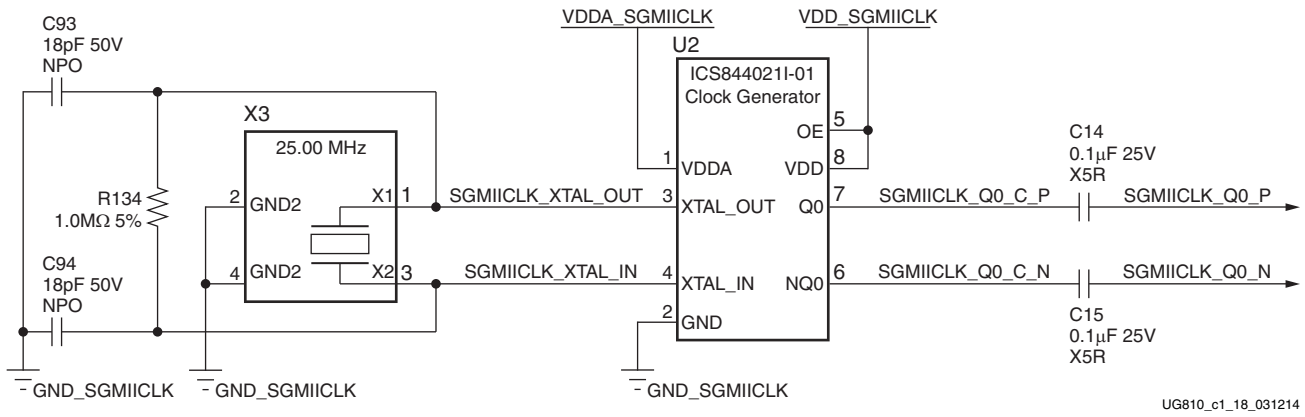

Figure 1-17: **Ethernet 125 MHz SGMII GTX Clock**

The following table shows the connections and pin numbers for the M88E1111 PHY.

Table 1-18: **Ethernet PHY Connections**

U1 FPGA Pin	Schematic Net Name	I/O Standard	M88E1111 (U37)	
			Pin Number	Pin Name
J21	PHY_MDIO	LVCMOS25	M1	MDIO
R23	PHY_MDC	LVCMOS25	L3	MDC
N30	PHY_INT	LVCMOS25	L1	INT_B
L20	PHY_RESET	LVCMOS25	K3	RESET_B
R30	PHY_CRS	LVCMOS25	B5	CRS
W19	PHY_COL	LVCMOS25	B6	COL
U27	PHY_RXCLK	LVCMOS25	C1	RXCLK
V26	PHY_RXER	LVCMOS25	D2	RXER
R28	PHY_REXCTL_RXDV	LVCMOS25	B1	RXDV
U30	PHY_RXD0	LVCMOS25	B2	RXD0
U25	PHY_RXD1	LVCMOS25	D3	RXD1
T25	PHY_RXD2	LVCMOS25	C3	RXD2

Table 1-18: **Ethernet PHY Connections *(Cont'd)***

U1 FPGA Pin	Schematic Net Name	I/O Standard	M88E1111 (U37)	
			Pin Number	Pin Name
U28	PHY_RXD3	LVCMOS25	B3	RXD3
R19	PHY_RXD4	LVCMOS25	C4	RXD4
T27	PHY_RXD5	LVCMOS25	A1	RXD5
T26	PHY_RXD6	LVCMOS25	A2	RXD6
T28	PHY_RXD7	LVCMOS25	C5	RXD7
K30	PHY_TXC_GTXCLK	LVCMOS25	E2	GTXCLK
M28	PHY_TXCLK	LVCMOS25	D1	TXCLK
N29	PHY_TXER	LVCMOS25	F2	TXER
M27	PHY_TXCTL_TXEN	LVCMOS25	E1	TXEN
N27	PHY_TXD0	LVCMOS25	F1	TXD0
N25	PHY_TXD1	LVCMOS25	G2	TXD1
M29	PHY_TXD2	LVCMOS25	G3	TXD2
L28	PHY_TXD3	LVCMOS25	H2	TXD3
J26	PHY_TXD4	LVCMOS25	H1	TXD4
K26	PHY_TXD5	LVCMOS25	H3	TXD5
L30	PHY_TXD6	LVCMOS25	J1	TXD6
J28	PHY_TXD7	LVCMOS25	J2	TXD7
J4	SGMII_TX_P	LVCMOS25	A3	SIN_P
J3	SGMII_TX_N	LVCMOS25	A4	SIN_N
H6	SGMII_RX_P	LVCMOS25	A7	SOUT_P
H5	SGMII_RX_N	LVCMOS25	A8	SOUT_N

Details about the tri-mode Ethernet MAC core are provided in *LogiCORE IP Tri-Mode Ethernet MAC User Guide* (PG051) [Ref 15].

For more information about the Marvell 88E1111, see [Ref 16].

For more information about the ICS 844021-01, see [Ref 17].

USB-to-UART Bridge

[Figure 1-2, callout 17]

The KC705 board contains a Silicon Labs CP2103GM USB-to-UART bridge device (U12) which allows a connection to a host computer with a USB port. The USB cable is supplied in the Evaluation Kit (standard-A plug to host computer, mini-B plug to KC705 board

connector J6). The CP2103GM is powered by the USB 5V provided by the host PC when the USB cable is plugged into the USB port on the KC705 board.

Xilinx UART IP is expected to be implemented in the FPGA fabric. The FPGA supports the USB-to-UART bridge using four signal pins: Transmit (TX), Receive (RX), Request to Send (RTS), and Clear to Send (CTS).

Silicon Labs provides royalty-free Virtual COM Port (VCP) drivers for the host computer. These drivers permit the CP2103GM USB-to-UART bridge to appear as a COM port to communications application software (for example, Tera Term or HyperTerm) that runs on the host computer. The VCP device drivers must be installed on the host PC prior to establishing communications with the KC705 board.

The following table shows the USB signal definitions at J6:

Table 1-19: **USB J6 Mini-B Receptacle Pin Assignments and Signal Definitions**

USB Receptacle Pins (J6)	Receptacle Pin Name	Schematic Net Name	Description	U12 Pin (CP2103GM)	U12 Pin Name (CP2103GM)
1	VBUS	USB_VBUS	+5V from host system - U12 CP2103 power	7, 8	REGIN, VBUS
2	D_N	USB_D_N	Bidirectional differential serial data (N-side)	4	D-
3	D_P	USB_D_P	Bidirectional differential serial data (P-side)	3	D+
4	GND	USB_GND	Signal ground	2, 29	GND, GND

The following table shows the USB connections between the FPGA and the UART.

Table 1-20: **FPGA to UART Connections**

FPGA U1				Schematic Net Name	CP2103 Device U12		
Pin	Function	Direction	I/O Standard		Pin	Function	Direction
L27	RTS	Output	LVCMOS25	USB_CTS	22	CTS	Input
K23	CTS	Input	LVCMOS25	USB_RTS	23	RTS	Output
K24	TX	Output	LVCMOS25	USB_RX	24	RXD	Input
M19	RX	Input	LVCMOS25	USB_TX	25	TXD	Output

For more information about the CP2103GM and to download the VCP drivers, see [Ref 8].

HDMI Video Output

[Figure 1-2, callout 18]

The KC705 board provides a High-Definition Multimedia Interface (HDMI) video output using the Analog Devices ADV7511KSTZ-P HDMI transmitter (U65). The HDMI output is provided on a Molex 500254-1927 HDMI type-A connector (P6). The ADV7511 is wired to support 1080P 60Hz, YCbCr 4:2:2 encoding via 16-bit input data mapping.

The KC705 board supports the following HDMI device interfaces:

- 18 data lines
- Independent VSYNC, HSYNC
- Single-ended input CLK
- Interrupt Out Pin to FPGA
- I2C
- SPDIF

The following figure shows the HDMI codec circuit.

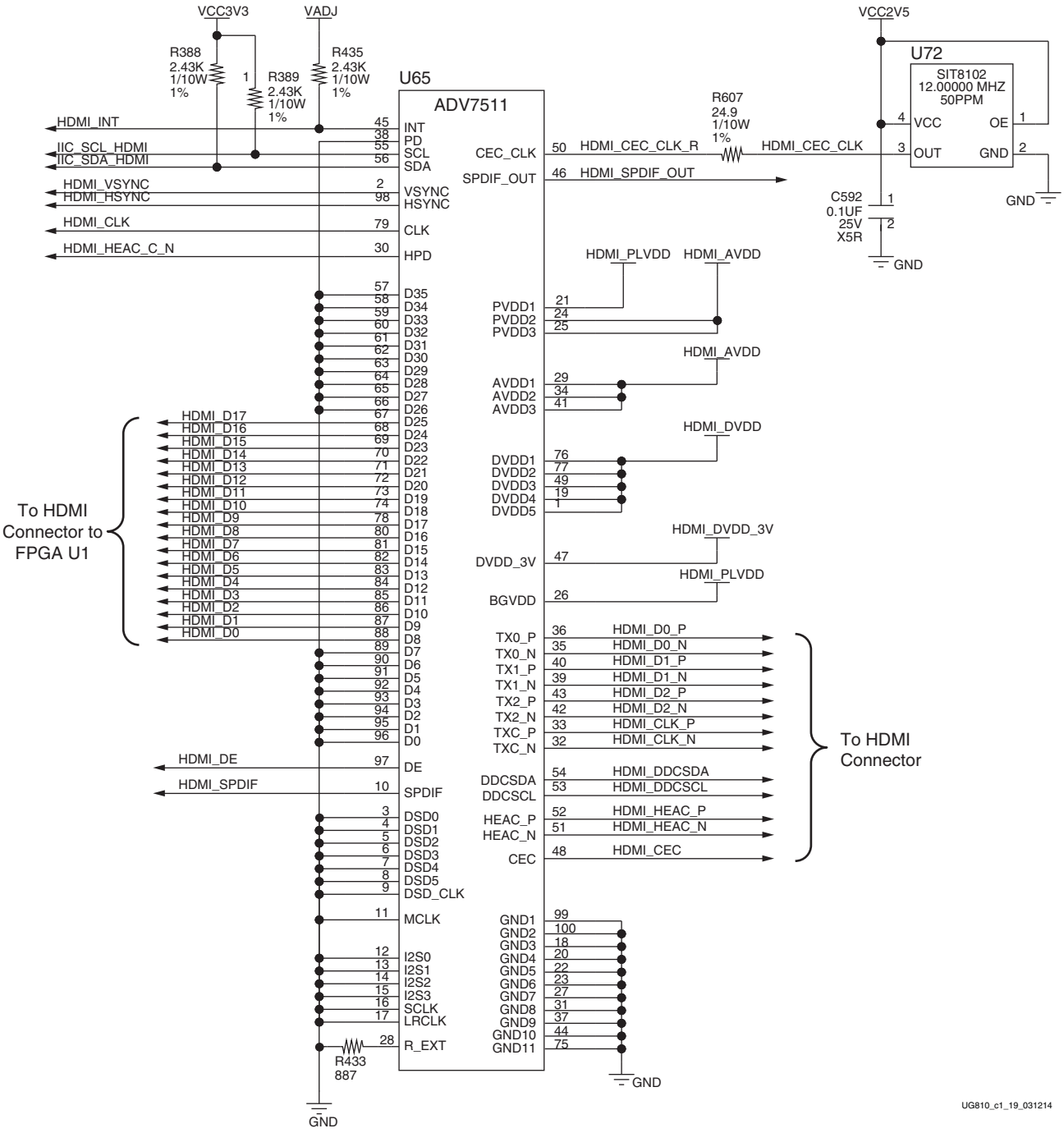

Figure 1-18: **HDMI Codec Circuit**

The following table lists the connections between the codec and the FPGA.

Table 1-21: **FPGA to HDMI Codec Connections (ADV7511)**

U1 FPGA Pin	Schematic Net Name	I/O Standard	ADV7511 (U65)	
			Pin Number	Pin Name
B23	HDMI_D0	LVCMOS25	88	D8
A23	HDMI_D1	LVCMOS25	87	D9
E23	HDMI_D2	LVCMOS25	86	D10
D23	HDMI_D3	LVCMOS25	85	D11
F25	HDMI_D4	LVCMOS25	84	D12
E25	HDMI_D5	LVCMOS25	83	D13
E24	HDMI_D6	LVCMOS25	82	D14
D24	HDMI_D7	LVCMOS25	81	D15
F26	HDMI_D8	LVCMOS25	80	D16
E26	HDMI_D9	LVCMOS25	78	D17
G23	HDMI_D10	LVCMOS25	74	D18
G24	HDMI_D11	LVCMOS25	73	D19
J19	HDMI_D12	LVCMOS25	72	D20
H19	HDMI_D13	LVCMOS25	71	D21
L17	HDMI_D14	LVCMOS25	70	D22
L18	HDMI_D15	LVCMOS25	69	D23
K19	HDMI_D16	LVCMOS25	68	D24
K20	HDMI_D17	LVCMOS25	67	D25
H17	HDMI_DE	LVCMOS25	97	DE
J17	HDMI_SPDIF	LVCMOS25	10	SPDIF
K18	HDMI_CLK	LVCMOS25	79	CLK
H20	HDMI_VSYNC	LVCMOS25	2	VSYNC
J18	HDMI_HSYNC	LVCMOS25	98	HSYNC
AH24	HDMI_INT	LVCMOS25	45	INT
G20	HDMI_SPDIF_OUT	LVCMOS25	46	SPDIF_OUT

The following table lists the connections between the codec and the HDMI connector P6.

Table 1-22: **ADV7511 to HDMI Connector Connections**

ADV7511 (U65)	Schematic Net Name	HDMI Connector P6 Pin
36	HDMI_D0_P	7
35	HDMI_D0_N	9
40	HDMI_D1_P	4
39	HDMI_D1_N	6
43	HDMI_D2_P	1
42	HDMI_D2_N	3
33	HDMI_CLK_P	10
32	HDMI_CLK_N	12
54	HDMI_DDCSDA	16
53	HDMI_DDCSCL	15
52	HDMI_HEAC_P	14
51	HDMI_HEAC_N	19
48	HDMI_CRC	13

For more information about the ADV7511KSTZ-P part, see [Ref 18].

LCD Character Display

[Figure 1-2, callout 19]

A 2-line by 16-character display is provided on the KC705 board (Figure 1-19).

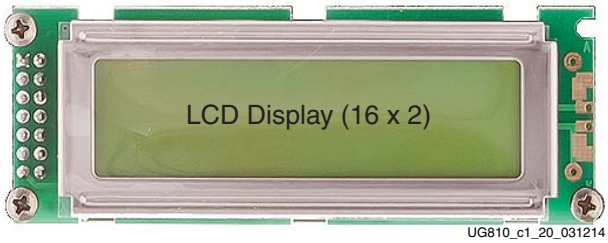

Figure 1-19: **LCD Display**

The character display runs at 5.0V and is connected to the FPGA's 1.5V HP bank 33 through a Texas Instruments TXS0108E 8-bit bidirectional voltage level translator (U10). The figure below shows the LCD interface circuit.

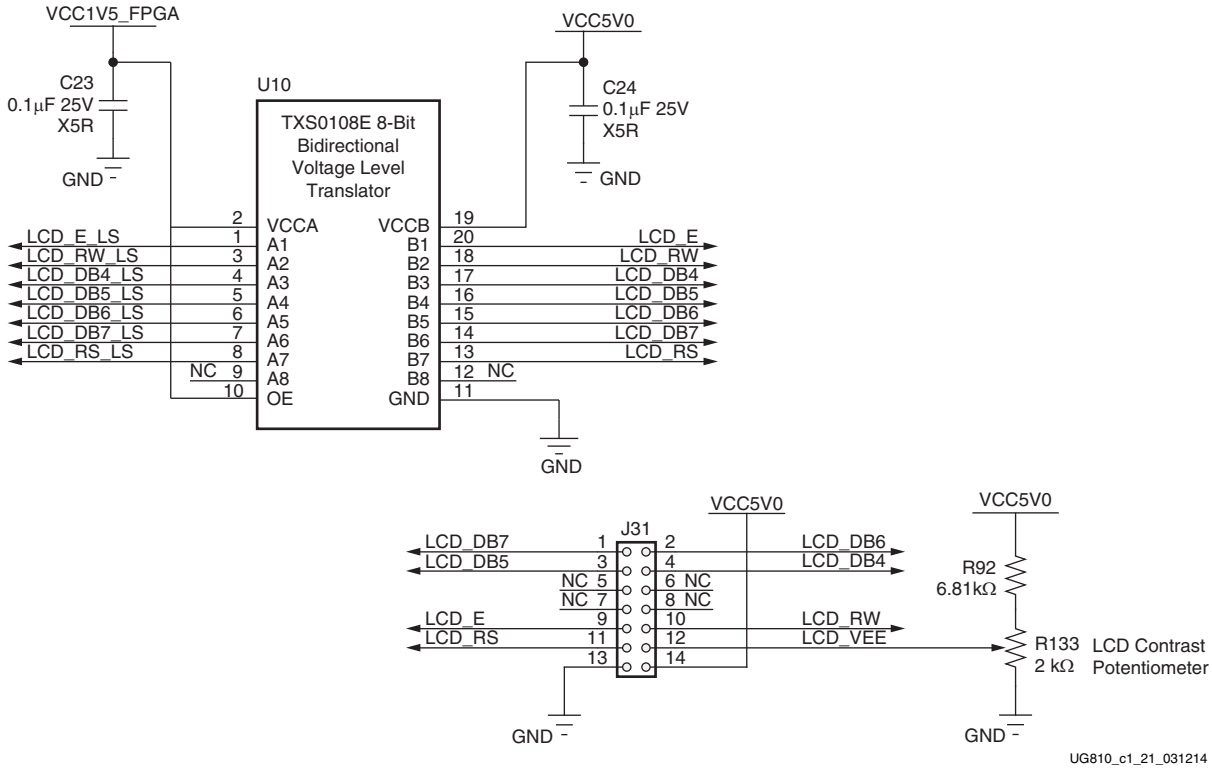

Figure 1-20: **LCD Interface Circuit**

The KC705 board base board uses a male Samtec MTLW-107-07-G-D-265 2x7 header (J31) with 0.025-inch square posts on 0.100-inch centers for connecting to a Samtec SLW-107-01-L-D female socket on the LCD display panel assembly. The LCD header is shown in the figure below.

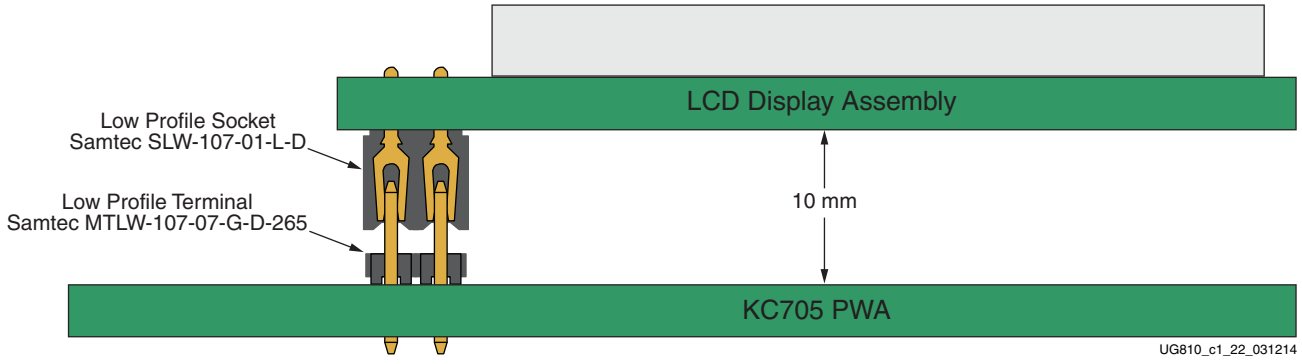

Figure 1-21: **LCD Header Details**

The following table lists the connections between the FPGA and the LCD header.

Table 1-23: **FPGA to LCD Header Connections**

FPGA Pin (U1)	Schematic Net Name	I/O Standard	LCD Header Pin (J31)
AA13	LCD_DB4_LS	LVCMOS15	4
AA10	LCD_DB5_LS	LVCMOS15	3
AA11	LCD_DB6_LS	LVCMOS15	2
Y10	LCD_DB7_LS	LVCMOS15	1
AB13	LCD_RW_LS	LVCMOS15	10
Y11	LCD_RS_LS	LVCMOS15	11
AB10	LCD_E_LS	LVCMOS15	9

For more information about the Displaytech S162D LCD, see [Ref 19].

I2C Bus Switch

[Figure 1-2, callout 20]

The KC705 board implements a single I2C port on the FPGA (IIC_SDA_MAIN, IIC_SDA_SCL), which is routed through a TI PCA9548 1-to-8 channel I2C switch (U49). U49 pin 24 net IIC_MUX_RESET_B is connected to U1 bank 15 pin P23. This is an active-Low signal and must be driven High (FPGA U1 pin P23) to enable I2C bus transactions between the FPGA U1 and the other components on the I2C bus. The I2C switch can operate at speeds up to 400 kHz. The U49 bus switch at I2C address `0x74/0b01110100` must be addressed and configured to select the desired target back-side device.

The KC705 board I2C bus topology is shown in the figure below.

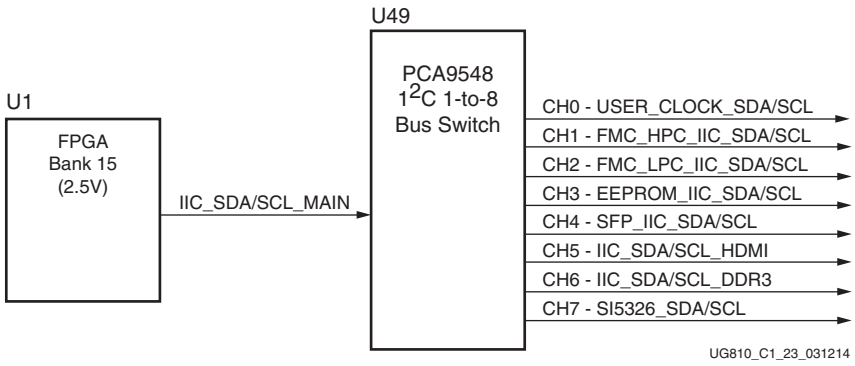

Figure 1-22: **I2C Bus Topology**

User applications that communicate with devices on one of the downstream I2C buses must first set up a path to the desired bus through the U49 bus switch at I2C address `0x74/0b01110100`.

The following table lists the address for each device on the I2C bus.

Table 1-24: **I2C Devices**

I2C Device	I2C Switch Position	I2C Address
Si570 Clock	0	0b1011101
FMC HPC	1	0bXXXXXXX
FMC LPC	2	0bXXXXXXX
IIC EEPROM	3	0b1010100
SFP Module	4	0b1010000
ADV7511 HDMI	5	0b0111001
DDR3 SODIMM	6	0b1010000, 0b0011000
Si5324 Clock	7	0b1101000

For more information about the TI PCA9548 part, see [Ref 20].

Status LEDs

[Figure 1-2, callout 21]

The following table defines the status LEDs. For user controlled LEDs, see User I/O.

Table 1-25: **Status LEDs**

Reference Designator	Signal Name	Color	Description
DS14	PWRCTL1_VCC4A_PG	Green	FMC power good
DS20	FPGA_DONE	Green	FPGA configured successfully
DS21	FPGA_INIT_B	Green/red	GREEN: FPGA initialization successful, RED: FPGA initialization in progress
DS22	VCC12_P_IN	Green	12V power ON
DS23	PWRCTL_PWRGOOD	Green	UCD9248 power controllers (U55, U56) power good
DS24	LINEAR_POWER_GOOD	Green	TPS51200 (U33) VTTDDR Power Good

Ethernet PHY Status LEDs

[Figure 1-2, callout 21]

The Ethernet PHY status LEDs are mounted to be visible through the metal bracket on the left edge of the KC705 board when it is installed into a PCIe slot in a PC chassis. The six PHY status LEDs are located above the RJ45 Ethernet jack as shown in the figure below.

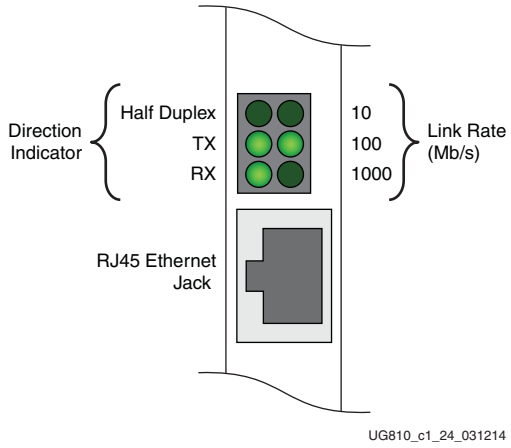

Figure 1-23: **Ethernet PHY Status LEDs**

The following table lists the Ethernet PHY status LEDs.

Table 1-26: **Ethernet PHY Status LEDs**

Reference Designator	Signal Name	Color	Description
DS11	PHY_LED_RX	GREEN	Ethernet PHY RX
DS11	PHY_LED_LINK1000	GREEN	Ethernet Link Speed is 1000 Mb/s
DS12	PHY_LED_TX	GREEN	Ethernet PHY TX
DS12	PHY_LED_LINK100	GREEN	Ethernet Link Speed is 100 Mb/s
DS13	PHY_LED_DUPLEX	GREEN	Ethernet Link is Half-duplex
DS13	PHY_LED_LINK10	GREEN	Ethernet Link Speed is 10 Mb/s

User I/O

[Figure 1-2, callout 22 - 26]

The KC705 board provides the following user and general purpose I/O capabilities:

- Eight user LEDs (callout 22)
  - GPIO_LED_[7-0]: DS27, DS26, DS25, DS3, DS10, DS1, DS4
- Five user pushbuttons and reset switch (callout 23)

- GPIO_SW_[NESWC]: SW2, SW3, SW4, SW6, SW5
- CPU_RESET: SW7

- 4-position user DIP Switch (callout 24)
  - GPIO_DIP_SW[3:0]: SW11
- User Rotary Switch (callout 25, hidden beneath the LCD)
  - ROTARY_PUSH, ROTARY_INCA, ROTARY_INCB: SW8
- User SMA (callout 26)
  - USER_SMA_GPIO_P, USER_SMA_GPIO_N: J13, J14
- 2 line x 16 character LCD Character Display (callout 19)
  - If the display is unmounted, connector J31 pins are available as 7 independent 5V GPIOs

User GPIO LEDs

[Figure 1-2, callout 34]

The following figure shows the user LED circuits.

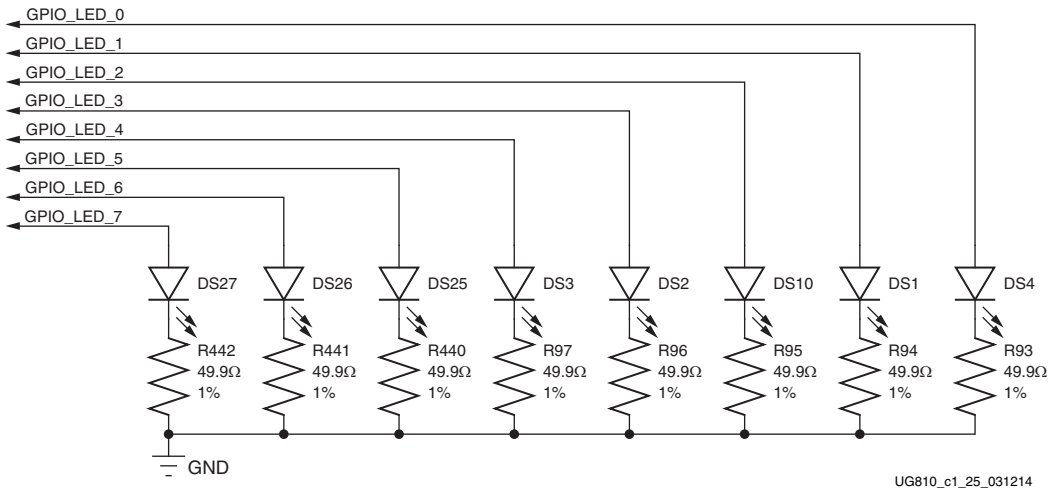

Figure 1-24: **User LEDs**

User Pushbuttons

[Figure 1-2, callout 23]

The figure below shows the user pushbutton switch circuits.

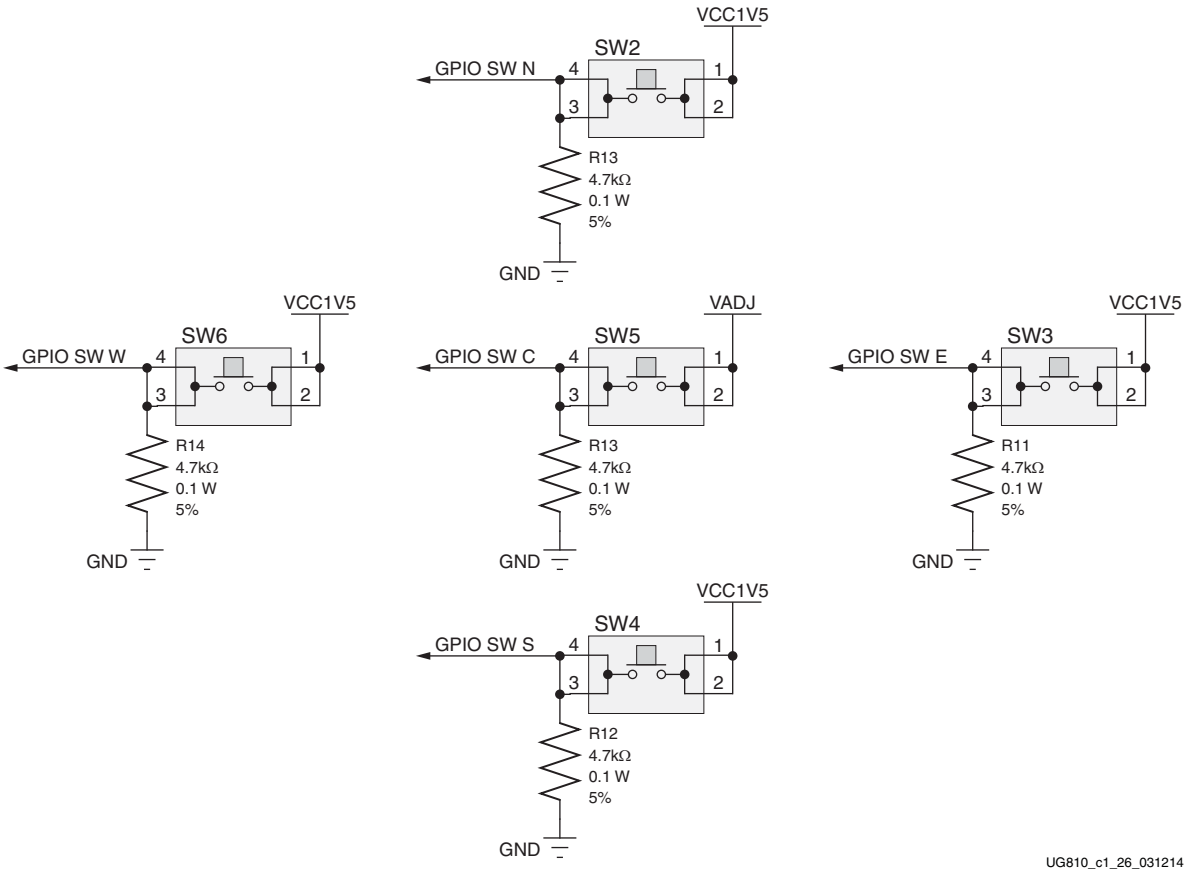

Figure 1-25: **User Pushbuttons**

CPU Reset Pushbutton

[Figure 1-2, callout 37]

The figure below shows the CPU reset pushbutton circuit.

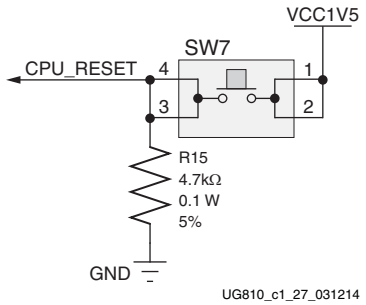

Figure 1-26: **CPU Reset Pushbutton**

GPIO DIP Switch

[Figure 1-2, callout 24]

The following figure shows the GPIO DIP Switch circuit.

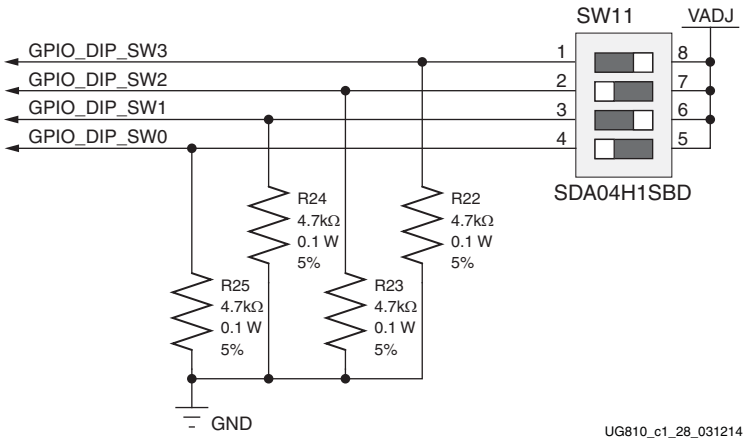

Figure 1-27: **GPIO DIP Switch**

Rotary Switch

The figure below shows the rotary switch SW8.

[Figure 1-2, callout 25]

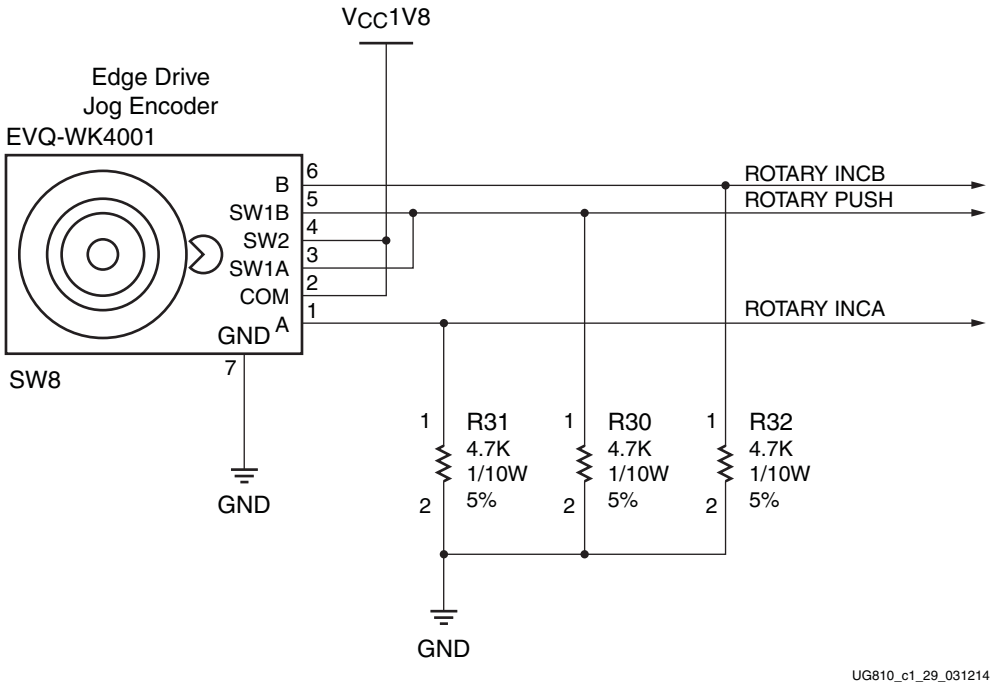

Figure 1-28: **Rotary Switch SW8**

GPIO SMA Connectors

The figure below shows the GPIO SMAs J13 and J14.

[Figure 1-2, callout 26]

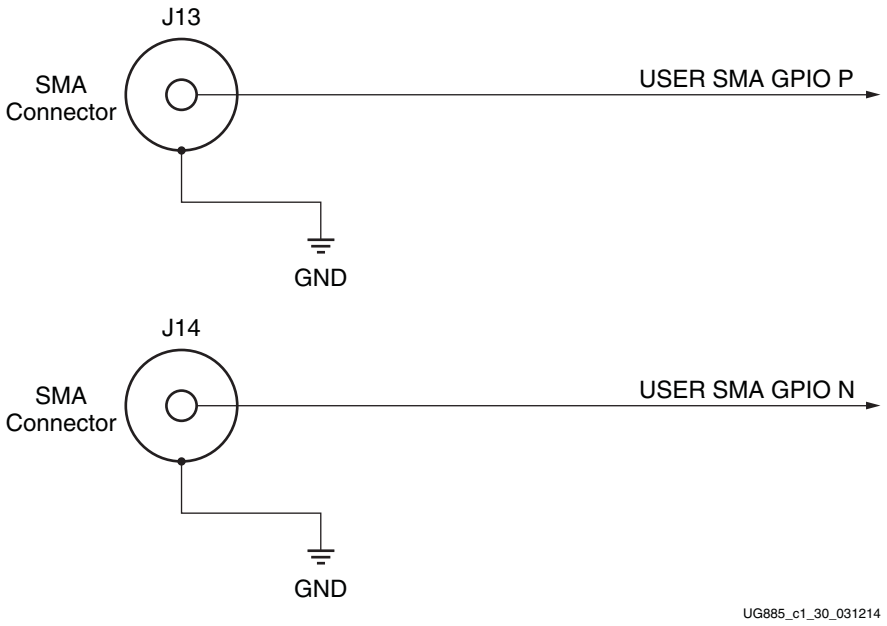

Figure 1-29: **GPIO SMAs J13 and J14**

The following table lists the GPIO Connections to FPGA U1.

Table 1-27: **GPIO Connections to FPGA U1**

U1 FPGA Pin	Schematic Net Name	I/O Standard	GPIO Pin
Indicator LEDs (Active-High)			
AB8	GPIO_LED_0	LVCMOS15	DS4.2
AA8	GPIO_LED_1	LVCMOS15	DS1.2
AC9	GPIO_LED_2	LVCMOS15	DS10.2
AB9	GPIO_LED_3	LVCMOS15	DS2.2
AE26	GPIO_LED_4	LVCMOS25	DS3.2
G19	GPIO_LED_5	LVCMOS25	DS25.2
E18	GPIO_LED_6	LVCMOS25	DS26.2
F16	GPIO_LED_7	LVCMOS25	DS27.2
Directional Pushbutton Switches			
AA12	GPIO_SW_N	LVCMOS15	SW2.1
AG5	GPIO_SW_E	LVCMOS15	SW3.1

Table 1-27: **GPIO Connections to FPGA U1 *(Cont'd)***

U1 FPGA Pin	Schematic Net Name	I/O Standard	GPIO Pin
AB12	GPIO_SW_S	LVCMOS15	SW4.1
AC6	GPIO_SW_W	LVCMOS15	SW6.1
G12	GPIO_SW_C	LVCMOS25	SW5.1
AB7	CPU_RESET	LVCMOS15	SW7.1
4-Pole DIP Switch			
Y29	GPIO_DIP_SW0	LVCMOS25	SW11.4
W29	GPIO_DIP_SW1	LVCMOS25	SW11.3
AA28	GPIO_DIP_SW2	LVCMOS25	SW11.2
Y28	GPIO_DIP_SW3	LVCMOS25	SW11.1
User Rotary Switch			
Y25	ROTARY_INCB SW	LVCMOS25	SW8.6
AA26	ROTARY_PUSH SW	LVCMOS25	SW8.5
Y26	ROTARY_INCA SW	LVCMOS25	SW8.1
User SMA			
Y23	USER_SMA_GPIO_P	LVCMOS25	J13.1
Y24	USER_SMA_GPIO_N	LVCMOS25	J14.1

Switches

[Figure 1-2, callout 27 - 28]

The KC705 evaluation board includes a power and a configuration switch:

- Power on/off slide switch SW15 (callout 27)
- FPGA_PROG_B SW14, active-Low (callout 28)

Power On/Off Slide Switch SW15

[Figure 1-2, callout 27]

The KC705 board power switch is SW15. Sliding the switch actuator from the Off to On position applies 12V power from J49, a 6-pin mini-fit connector. Green LED DS22 illuminates when the KC705 board power is on. See Power Management for details on the onboard power system.

CAUTION! *Do NOT plug a PC ATX power supply 6-pin connector into J49 on the KC705 board The ATX 6-pin connector has a different pinout than J49. Connecting an ATX 6-pin connector into J49 will damage the KC705 board and void the board warranty.*

The following figure shows the power connector J49, power switch SW15 and indicator LED DS22.

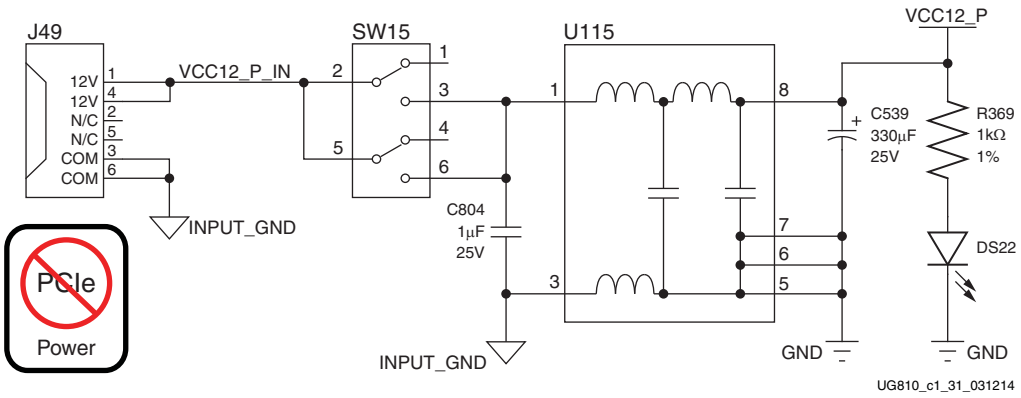

Figure 1-30: **Power On/Off Switch SW15**

The KC705 Evaluation Kit provides the adapter cable shown in Figure 1-31 for powering the KC705 board from the ATX power supply 4-pin peripheral connector. The Xilinx part number for this cable is 2600304, and is equivalent to Sourcegate Technologies part number AZCBL-WH-1109-RA4. For information on ordering this cable, see [Ref 21].

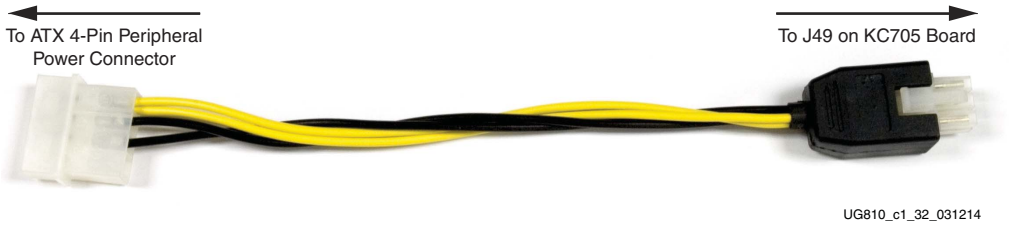

Figure 1-31: **ATX Power Supply Adapter Cable**

FPGA_PROG_B Pushbutton SW14 (Active-Low)

[Figure 1-2, callout 28]

Switch SW14 grounds the FPGA PROG_B pin when pressed. This action initiates an FPGA reconfiguration. The FPGA_PROG_B signal is connected to FPGA U1 pin K10.

See *7 Series FPGAs Configuration User Guide* (UG470) [Ref 3] for further details on configuring the 7 series FPGAs.

The following figure shows SW14.

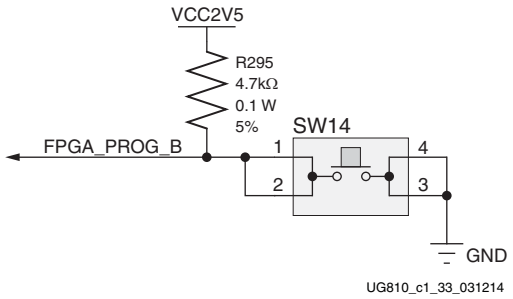

Figure 1-32: **FPGA_PROG_B Pushbutton SW14**

Configuration Mode and Upper Linear Flash Address Switch (SW13)

[Figure 1-2, callout 29]

FPGA Configuration Mode: DIP switch SW13 positions 3, 4, and 5 control which configuration mode is used at power-up or when the PROG pushbutton is pressed.

Linear BPI Flash Memory Upper Addresses: DIP switch SW13 positions 1 and 2 control the setting of address bits FLASH_A25 and FLASH_A24. The mode signals FPGA_M2, _M1 and _M0 are connected to FPGA U1 pins AB1, AB2 and AB5 respectively. The BPI flash memory U58 address signals FLASH_A24 AND FLASH_A25 are connected to FPGA U1 pins M23 and M22 respectively. Configuration mode is used at power-up or when the PROG pushbutton is pressed.

The following figure shows the SW13 circuit.

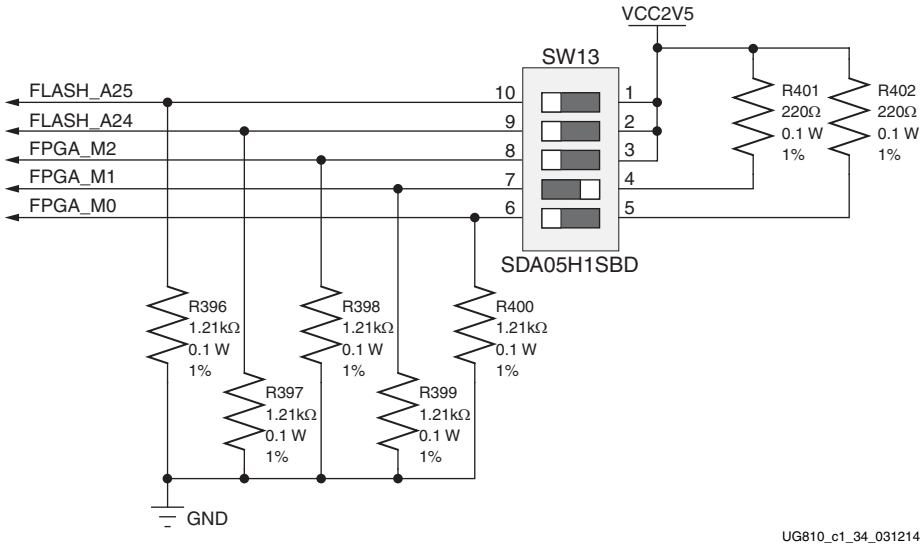

Figure 1-33: **Configuration Mode and Upper Linear Flash Address Switch**

FPGA Mezzanine Card Interface

[Figure 1-2, callout 30 - 31]

The KC705 evaluation board for the Kintex-7 FPGA supports the VITA 57.1 FPGA Mezzanine Card (FMC) specification by providing subset implementations of a high pin count (HPC) connector at J22 and a low pin count (LPC) connector at J2. Both connectors use the same 10 x 40 form factor, except the HPC version is fully populated with 400 pins and the LPC version is partially populated with 160 pins. Both connectors are keyed so that a the mezzanine card faces away from the KC705 board when connected.

Signaling Speed Ratings:

- Single-ended: 9 GHz (18 Gb/s)
- Differential Optimal Vertical: 9 GHz (18 Gb/s)
- Differential Optimal Horizontal: 16 GHz (32 Gb/s)
- High Density Vertical: 7 GHz (15 Gb/s)

The Samtec connector system is rated for signaling speeds up to 9 GHz (18 Gb/s) based on a -3 dB insertion loss point within a two-level signaling environment.

Connector Type:

- Samtec SEAF Series, 1.27 mm (0.050 in) pitch. Mates with SEAM series connector

For more information about SEAF series connectors, see [Ref 20].

HPC Connector J22

[Figure 1-2, callout 30]

The 400-pin HPC connector defined by the FMC specification (Figure B-1) provides connectivity for up to:

- 160 single-ended or 80 differential user-defined signals
- 10 GTX transceivers
- 2 GTX clocks
- 4 differential clocks
- 159 ground and 15 power connections

The connections between the HPC connector at J22 and FPGA U1 (Table 1-28) implement a subset of this connectivity:

- 58 differential user defined pairs

- 34 LA pairs (LA00-LA33)
- 24 HA pairs (HA00-HA23)

- 4 GTX transceivers
- 2 GTX clocks
- 2 differential clocks
- 159 ground and 15 power connections

The HPC signals are distributed across GTX Quads 116, 117, and 118. Each of these Quads have their VCCO voltage connected to VADJ.

Note: The KC705 board VADJ voltage for the J22 and J2 connectors is determined by the FMC VADJ power sequencing logic described in Power Management.

Table 1-28: **HPC Connections, J22 to FPGA U1**

J22 Pin	Schematic Net Name	I/O Standard	FPGA U1 Pin	J22 Pin	Schematic Net Name	I/O Standard	FPGA U1 Pin
A2	FMC_HPC_DP1_M2C_P		D6	B1	NC		
A3	FMC_HPC_DP1_M2C_N		D5	B4	NC		
A6	FMC_HPC_DP2_M2C_P		B6	B5	NC		
A7	FMC_HPC_DP2_M2C_N		B5	B8	NC		
A10	FMC_HPC_DP3_M2C_P		A8	B9	NC		
A11	FMC_HPC_DP3_M2C_N		A7	B12	NC		
A14	NC			B13	NC		
A15	NC			B16	NC		
A18	NC			B17	NC		
A19	NC			B20	FMC_HPC_GBTCLK1_M2C_P	LVDS	E8
A22	FMC_HPC_DP1_C2M_P		C4	B21	FMC_HPC_GBTCLK1_M2C_N	LVDS	E7
A23	FMC_HPC_DP1_C2M_N		C3	B24	NC		
A26	FMC_HPC_DP2_C2M_P		B2	B25	NC		
A27	FMC_HPC_DP2_C2M_N		B1	B28	NC		
A30	FMC_HPC_DP3_C2M_P		A4	B29	NC		
A31	FMC_HPC_DP3_C2M_N		A3	B32	NC		
A34	NC			B33	NC		
A35	NC			B36	NC		
A38	NC			B37	NC		
A39	NC			B40	NC		

Table 1-28: **HPC Connections, J22 to FPGA U1 *(Cont'd)***

J22 Pin	Schematic Net Name	I/O Standard	FPGA U1 Pin	J22 Pin	Schematic Net Name	I/O Standard	FPGA U1 Pin
C2	FMC_HPC_DP0_C2M_P		D2	D1	PWRCTL1_VCC4A_PG		
C3	FMC_HPC_DP0_C2M_N		D1	D4	FMC_HPC_GBTCLK0_M2C_P	LVDS	C8
C6	FMC_HPC_DP0_M2C_P		E4	D5	FMC_HPC_GBTCLK0_M2C_N	LVDS	C7
C7	FMC_HPC_DP0_M2C_N		E3	D8	FMC_HPC_LA01_CC_P	LVDS	D26
C10	FMC_HPC_LA06_P	LVDS	H30	D9	FMC_HPC_LA01_CC_N	LVDS	C26
C11	FMC_HPC_LA06_N	LVDS	G30	D11	FMC_HPC_LA05_P	LVDS	G29
C14	FMC_HPC_LA10_P	LVDS	D29	D12	FMC_HPC_LA05_N	LVDS	F30
C15	FMC_HPC_LA10_N	LVDS	C30	D14	FMC_HPC_LA09_P	LVDS	B30
C18	FMC_HPC_LA14_P	LVDS	B28	D15	FMC_HPC_LA09_N	LVDS	A30
C19	FMC_HPC_LA14_N	LVDS	A28	D17	FMC_HPC_LA13_P	LVDS	A25
C22	FMC_HPC_LA18_CC_P	LVDS	F21	D18	FMC_HPC_LA13_N	LVDS	A26
C23	FMC_HPC_LA18_CC_N	LVDS	E21	D20	FMC_HPC_LA17_CC_P	LVDS	F20
C26	FMC_HPC_LA27_P	LVDS	C19	D21	FMC_HPC_LA17_CC_N	LVDS	E20
C27	FMC_HPC_LA27_N	LVDS	B19	D23	FMC_HPC_LA23_P	LVDS	B22
C30	FMC_HPC_IIC_SCL			D24	FMC_HPC_LA23_N	LVDS	A22
C31	FMC_HPC_IIC_SDA			D26	FMC_HPC_LA26_P	LVDS	B18
C34	GA0=0=GND			D27	FMC_HPC_LA26_N	LVDS	A18
C35	VCC12_P			D29	FMC_HPC_TCK_BUF		
C37	VCC12_P			D30	FMC_TDI_BUF		
C39	VCC3V3			D31	FMC_HPC_TDO_LPC_TDI		
				D32	VCC3V3		
				D33	FMC_TMS_BUF		
				D34	NC		
				D35	GA1=0=GND		
				D36	VCC3V3		
				D38	VCC3V3		
				D40	VCC3V3		
E2	FMC_HPC_HA01_CC_P	LVDS	H14	F1	FMC_HPC_PG_M2C	LVDS	J29
E3	FMC_HPC_HA01_CC_N	LVDS	G14	F4	FMC_HPC_HA00_CC_P	LVDS	D12
E6	FMC_HPC_HA05_P	LVDS	F15	F5	FMC_HPC_HA00_CC_N	LVDS	D13
E7	FMC_HPC_HA05_N	LVDS	E16	F7	FMC_HPC_HA04_P	LVDS	F11

Table 1-28: **HPC Connections, J22 to FPGA U1 *(Cont'd)***

J22 Pin	Schematic Net Name	I/O Standard	FPGA U1 Pin	J22 Pin	Schematic Net Name	I/O Standard	FPGA U1 Pin
E9	FMC_HPC_HA09_P	LVDS	F12	F8	FMC_HPC_HA04_N	LVDS	E11
E10	FMC_HPC_HA09_N	LVDS	E13	F10	FMC_HPC_HA08_P	LVDS	E14
E12	FMC_HPC_HA13_P	LVDS	L16	F11	FMC_HPC_HA08_N	LVDS	E15
E13	FMC_HPC_HA13_N	LVDS	K16	F13	FMC_HPC_HA12_P	LVDS	C15
E15	FMC_HPC_HA16_P	LVDS	L15	F14	FMC_HPC_HA12_N	LVDS	B15
E16	FMC_HPC_HA16_N	LVDS	K15	F16	FMC_HPC_HA15_P	LVDS	H15
E18	FMC_HPC_HA20_P	LVDS	K13	F17	FMC_HPC_HA15_N	LVDS	G15
E19	FMC_HPC_HA20_N	LVDS	J13	F19	FMC_HPC_HA19_P	LVDS	H11
E21	NC			F20	FMC_HPC_HA19_N	LVDS	H12
E22	NC			F22	NC		
E24	NC			F23	NC		
E25	NC			F25	NC		
E27	NC			F26	NC		
E28	NC			F28	NC		
E30	NC			F29	NC		
E31	NC			F31	NC		
E33	NC			F32	NC		
E34	NC			F34	NC		
E36	NC			F35	NC		
E37	NC			F37	NC		
E39	VADJ			F38	NC		
				F40	VADJ		
G2	FMC_HPC_CLK1_M2C_P	LVDS	D17	H1	NC		
G3	FMC_HPC_CLK1_M2C_N	LVDS	D18	H2	FMC_HPC_PRSNT_M2C_B	LVCMOS 25	M20
G6	FMC_HPC_LA00_CC_P	LVDS	C25	H4	FMC_HPC_CLK0_M2C_P	LVDS	D27
G7	FMC_HPC_LA00_CC_N	LVDS	B25	H5	FMC_HPC_CLK0_M2C_N	LVDS	C27
G9	FMC_HPC_LA03_P	LVDS	H26	H7	FMC_HPC_LA02_P	LVDS	H24
G10	FMC_HPC_LA03_N	LVDS	H27	H8	FMC_HPC_LA02_N	LVDS	H25
G12	FMC_HPC_LA08_P	LVDS	E29	H10	FMC_HPC_LA04_P	LVDS	G28
G13	FMC_HPC_LA08_N	LVDS	E30	H11	FMC_HPC_LA04_N	LVDS	F28

Table 1-28: **HPC Connections, J22 to FPGA U1 *(Cont'd)***

J22 Pin	Schematic Net Name	I/O Standard	FPGA U1 Pin	J22 Pin	Schematic Net Name	I/O Standard	FPGA U1 Pin
G15	FMC_HPC_LA12_P	LVDS	C29	H13	FMC_HPC_LA07_P	LVDS	E28
G16	FMC_HPC_LA12_N	LVDS	B29	H14	FMC_HPC_LA07_N	LVDS	D28
G18	FMC_HPC_LA16_P	LVDS	B27	H16	FMC_HPC_LA11_P	LVDS	G27
G19	FMC_HPC_LA16_N	LVDS	A27	H17	FMC_HPC_LA11_N	LVDS	F27
G21	FMC_HPC_LA20_P	LVDS	E19	H19	FMC_HPC_LA15_P	LVDS	C24
G22	FMC_HPC_LA20_N	LVDS	D19	H20	FMC_HPC_LA15_N	LVDS	B24
G24	FMC_HPC_LA22_P	LVDS	C20	H22	FMC_HPC_LA19_P	LVDS	G18
G25	FMC_HPC_LA22_N	LVDS	B20	H23	FMC_HPC_LA19_N	LVDS	F18
G27	FMC_HPC_LA25_P	LVDS	G17	H25	FMC_HPC_LA21_P	LVDS	A20
G28	FMC_HPC_LA25_N	LVDS	F17	H26	FMC_HPC_LA21_N	LVDS	A21
G30	FMC_HPC_LA29_P	LVDS	C17	H28	FMC_HPC_LA24_P	LVDS	A16
G31	FMC_HPC_LA29_N	LVDS	B17	H29	FMC_HPC_LA24_N	LVDS	A17
G33	FMC_HPC_LA31_P	LVDS	G22	H31	FMC_HPC_LA28_P	LVDS	D16
G34	FMC_HPC_LA31_N	LVDS	F22	H32	FMC_HPC_LA28_N	LVDS	C16
G36	FMC_HPC_LA33_P	LVDS	H21	H34	FMC_HPC_LA30_P	LVDS	D22
G37	FMC_HPC_LA33_N	LVDS	H22	H35	FMC_HPC_LA30_N	LVDS	C22
G39	VADJ			H37	FMC_HPC_LA32_P	LVDS	D21
				H38	FMC_HPC_LA32_N	LVDS	C21
				H40	VADJ		
J2	NC			K1	NC		
J3	NC			K4	NC		
J6	FMC_HPC_HA03_P	LVDS	C12	K5	NC		
J7	FMC_HPC_HA03_N	LVDS	B12	K7	FMC_HPC_HA02_P	LVDS	D11
J9	FMC_HPC_HA07_P	LVDS	B14	K8	FMC_HPC_HA02_N	LVDS	C11
J10	FMC_HPC_HA07_N	LVDS	A15	K10	FMC_HPC_HA06_P	LVDS	D14
J12	FMC_HPC_HA11_P	LVDS	B13	K11	FMC_HPC_HA06_N	LVDS	C14
J13	FMC_HPC_HA11_N	LVDS	A13	K13	FMC_HPC_HA10_P	LVDS	A11
J15	FMC_HPC_HA14_P	LVDS	J16	K14	FMC_HPC_HA10_N	LVDS	A12
J16	FMC_HPC_HA14_N	LVDS	H16	K16	FMC_HPC_HA17_CC_P	LVDS	G13
J18	FMC_HPC_HA18_P	LVDS	K14	K17	FMC_HPC_HA17_CC_N	LVDS	F13
J19	FMC_HPC_HA18_N	LVDS	J14	K19	FMC_HPC_HA21_P	LVDS	J11

Table 1-28: **HPC Connections, J22 to FPGA U1 *(Cont'd)***

J22 Pin	Schematic Net Name	I/O Standard	FPGA U1 Pin	J22 Pin	Schematic Net Name	I/O Standard	FPGA U1 Pin
J21	FMC_HPC_HA22_P	LVDS	L11	K20	FMC_HPC_HA21_N	LVDS	J12
J22	FMC_HPC_HA22_N	LVDS	K11	K22	FMC_HPC_HA23_P	LVDS	L12
J24	NC			K23	FMC_HPC_HA23_N	LVDS	L13
J25	NC			K25	NC		
J27	NC			K26	NC		
J28	NC			K28	NC		
J30	NC			K29	NC		
J31	NC			K31	NC		
J33	NC			K32	NC		
J34	NC			K34	NC		
J36	NC			K35	NC		
J37	NC			K37	NC		
J39	NC			K38	NC		
				K40	NC		

LPC Connector J2

[Figure 1-2, callout 31]

The 160-pin LPC connector defined by the FMC specification (Figure B-2) provides connectivity for up to:

- 68 single-ended or 34 differential user-defined signals
- 1 GTX transceiver
- 1 GTX clock
- 2 differential clocks
- 61 ground and 10 power connections

The connections between the LPC connector at J2 and FPGA U1 (Table 1-29) implement a subset of this connectivity:

- 34 differential user defined pairs
  - 34 LA pairs (LA00-LA33)
- 1 GTX transceiver
- 1 GTX clock

- 2 differential clocks
- 61 ground and 9 power connections

Table 1-29: **LPC Connections, J2 to FPGA U1**

J2 Pin	Schematic Net Name	I/O Standard	U1 FPGA Pin	J2 Pin	Schematic Net Name	I/O Standard	U1 FPGA Pin
C2	FMC_LPC_DP0_C2M_P		F2	D1	PWRCTL1_VCC4A_PG		
C3	FMC_LPC_DP0_C2M_N		F1	D4	FMC_LPC_GBTCLK0_M2C_P	LVDS	N8
C6	FMC_LPC_DP0_M2C_P		F6	D5	FMC_LPC_GBTCLK0_M2C_N	LVDS	N7
C7	FMC_LPC_DP0_M2C_N		F5	D8	FMC_LPC_LA01_CC_P	LVDS	AE23
C10	FMC_LPC_LA06_P	LVDS	AK20	D9	FMC_LPC_LA01_CC_N	LVDS	AF23
C11	FMC_LPC_LA06_N	LVDS	AK21	D11	FMC_LPC_LA05_P	LVDS	AG22
C14	FMC_LPC_LA10_P	LVDS	AJ24	D12	FMC_LPC_LA05_N	LVDS	AH22
C15	FMC_LPC_LA10_N	LVDS	AK25	D14	FMC_LPC_LA09_P	LVDS	AK23
C18	FMC_LPC_LA14_P	LVDS	AD21	D15	FMC_LPC_LA09_N	LVDS	AK24
C19	FMC_LPC_LA14_N	LVDS	AE21	D17	FMC_LPC_LA13_P	LVDS	AB24
C22	FMC_LPC_LA18_CC_P	LVDS	AD27	D18	FMC_LPC_LA13_N	LVDS	AC25
C23	FMC_LPC_LA18_CC_N	LVDS	AD28	D20	FMC_LPC_LA17_CC_P	LVDS	AB27
C26	FMC_LPC_LA27_P	LVDS	AJ28	D21	FMC_LPC_LA17_CC_N	LVDS	AC27
C27	FMC_LPC_LA27_N	LVDS	AJ29	D23	FMC_LPC_LA23_P	LVDS	AH26
C30	FMC_LPC_IIC_SCL			D24	FMC_LPC_LA23_N	LVDS	AH27
C31	FMC_LPC_IIC_SDA			D26	FMC_LPC_LA26_P	LVDS	AK29
C34	GA0=0=GND			D27	FMC_LPC_LA26_N	LVDS	AK30
C35	VCC12_P			D29	FMC_LPC_TCK_BUF		
C37	VCC12_P			D30	FMC_HPC_TDO_LPC_TDI		
C39	VCC3V3			D31	FMC_LPC_TDO_FPGA_TDI		
				D32	VCC3V3		
				D33	FMC_LPC_TMS_BUF		
				D34	NC		
				D35	GA1=0=GND		
				D36	VCC3V3		
				D38	VCC3V3		
				D40	VCC3V3		
G2	FMC_LPC_CLK1_M2C_P	LVDS	AG29	H1	NC		

Table 1-29: **LPC Connections, J2 to FPGA U1 *(Cont'd)***

J2 Pin	Schematic Net Name	I/O Standard	U1 FPGA Pin	J2 Pin	Schematic Net Name	I/O Standard	U1 FPGA Pin
G3	FMC_LPC_CLK1_M2C_N	LVDS	AH29	H2	FMC_LPC_PRSNT_M2C_B	LVCMOS25	
G6	FMC_LPC_LA00_CC_P	LVCOMS18	AD23	H4	FMC_LPC_CLK0_M2C_P	LVDS	AF22
G7	FMC_LPC_LA00_CC_N	LVCOMS18	AE24	H5	FMC_LPC_CLK0_M2C_N	LVDS	AG23
G9	FMC_LPC_LA03_P	LVDS	AG20	H7	FMC_LPC_LA02_P	LVDS	AF20
G10	FMC_LPC_LA03_N	LVDS	AH20	H8	FMC_LPC_LA02_N	LVDS	AF21
G12	FMC_LPC_LA08_P	LVDS	AJ22	H10	FMC_LPC_LA04_P	LVDS	AH21
G13	FMC_LPC_LA08_N	LVDS	AJ23	H11	FMC_LPC_LA04_N	LVDS	AJ21
G15	FMC_LPC_LA12_P	LVDS	AA20	H13	FMC_LPC_LA07_P	LVDS	AG25
G16	FMC_LPC_LA12_N	LVDS	AB20	H14	FMC_LPC_LA07_N	LVDS	AH25
G18	FMC_LPC_LA16_P	LVDS	AC22	H16	FMC_LPC_LA11_P	LVDS	AE25
G19	FMC_LPC_LA16_N	LVDS	AD22	H17	FMC_LPC_LA11_N	LVDS	AF25
G21	FMC_LPC_LA20_P	LVDS	AF26	H19	FMC_LPC_LA15_P	LVDS	AC24
G22	FMC_LPC_LA20_N	LVDS	AF27	H20	FMC_LPC_LA15_N	LVDS	AD24
G24	FMC_LPC_LA22_P	LVDS	AJ27	H22	FMC_LPC_LA19_P	LVDS	AJ26
G25	FMC_LPC_LA22_N	LVDS	AK28	H23	FMC_LPC_LA19_N	LVDS	AK26
G27	FMC_LPC_LA25_P	LVDS	AC26	H25	FMC_LPC_LA21_P	LVDS	AG27
G28	FMC_LPC_LA25_N	LVDS	AD26	H26	FMC_LPC_LA21_N	LVDS	AG28
G30	FMC_LPC_LA29_P	LVDS	AE28	H28	FMC_LPC_LA24_P	LVDS	AG30
G31	FMC_LPC_LA29_N	LVDS	AF28	H29	FMC_LPC_LA24_N	LVDS	AH30
G33	FMC_LPC_LA31_P	LVDS	AD29	H31	FMC_LPC_LA28_P	LVDS	AE30
G34	FMC_LPC_LA31_N	LVDS	AE29	H32	FMC_LPC_LA28_N	LVDS	AF30
G36	FMC_LPC_LA33_P	LVDS	AC29	H34	FMC_LPC_LA30_P	LVDS	AB29
G37	FMC_LPC_LA33_N	LVDS	AC30	H35	FMC_LPC_LA30_N	LVDS	AB30
G39	VADJ			H37	FMC_LPC_LA32_P	LVDS	Y30
				H38	FMC_LPC_LA32_N	LVDS	AA30
				H40	VADJ		

Power Management

[Figure 1-2, callout 32]

The KC705 board uses power regulators and PMBus compliant digital PWM system controllers from Texas Instruments to supply core and auxiliary voltages. The Texas Instruments Fusion Digital Power graphical user interface (GUI) is used to monitor the current and temperature levels of the board power modules. If any module temperature approaches 85°C, forced air cooling must be provided to keep the module temperature within rated limits.

The PCB layout and power system have been designed to meet the recommended criteria described in *7 Series FPGAs PCB Design and Pin Planning Guide* (UG483) [Ref 22].

The KC705 board power distribution diagram is shown in Figure 1-34.

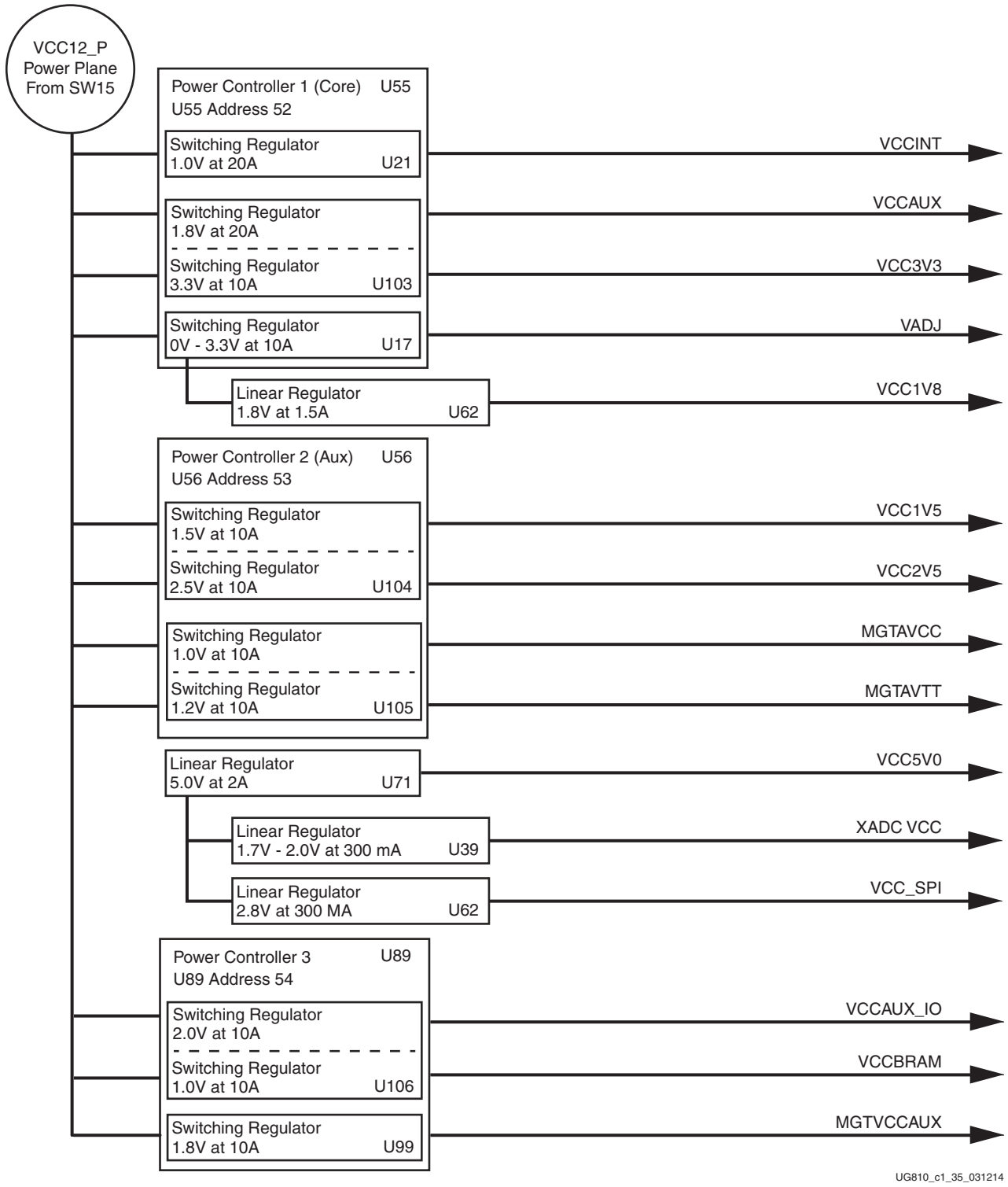

Figure 1-34: **KC705 Board Onboard Power Regulators**

The KC705 board core and auxiliary voltages are listed in Table 1-30.

Table 1-30: **Onboard Power System Devices**

Device Type	Reference Designator	Description	Power Rail Net Name	Power Rail Voltage	Schematic Page
Core Voltage Controller and Regulators					
UCD9248PFC(1)	U55	PMBus Controller (Addr = 52)			36
PTD08A020W	U21	Adjustable switching regulator 20A, 0.6V to 3.6V	VCCINT_FPGA	1.00V	37
PTD08D021W (V_{OUT} A)	U103	Adjustable switching regulator dual 10A, 0.6Vto 3.6V	VCCAUX	1.80V	38
PTD08D021W (V_{OUT} B)		Adjustable switching regulator dual 10A, 0.6Vto 3.6V	VCC3V3	3.30V	38
PTD08A010W	U17	Adjustable switching regulator 10A, 0.6V to 3.6V	VCC_ADJ	0-3.30V	39
Auxiliary Voltage Controller and Regulators					
UCD9248PFC(2)	U56	PMBus Controller (Addr = 53)			40
PTD08D021W (V_{OUT} A)	U104	Adjustable switching regulator dual 10A, 0.6Vto 3.6V	VCC2V5_FPGA	2.50V	41
PTD08D021W (V_{OUT} B)		Adjustable switching regulator dual 10A, 0.6Vto 3.6V	VCC1V5_FPGA	1.50V	41
PTD08D021W (V_{OUT} A)	U105	Adjustable switching regulator dual 10A, 0.6Vto 3.6V	MGTAVCC	1.00V	42
PTD08D021W (V_{OUT} B)		Adjustable switching regulator dual 10A, 0.6Vto 3.6V	MGTAVTT	1.20V	42
UCD9248PFC(3)	U89	PMBus Controller (Addr = 54)			43
PTD08D021W (V_{OUT} A)	U106	Dual 10A 0.6V - 3.6V Adj. Switching Regulator	VCCAUX_IO	2.00V	44
PTD08D021W (V_{OUT} B)		Dual 10A 0.6V - 3.6V Adj. Switching Regulator	VCCBRAM	1.00V	44
PTD08A010W	U99	10A 0.6V - 3.6V Adj. Switching Regulator	MGTVCCAUX	1.80V	45
Linear Regulators					
LMZ12002	U71	Fixed Linear Regulator 2A	VCC5V0	5.00V	46
TL1962ADC	U62	Fixed Linear Regulator, 1.5A	VCC1V8	1.80V	46
ADP123	U17	Fixed Linear Regulator, 300mA	VCC_SPI	2.80V	46
ADP123	U18	Fixed Linear Regulator, 300mA	XADC_VCC	1.80V	31

Table 1-30: **Onboard Power System Devices *(Cont'd)***

Device Type	Reference Designator	Description	Power Rail Net Name	Power Rail Voltage	Schematic Page
TPS51200DR	U33	Tracking Regulator, 3A	VTTDDR	0.75V	46

Notes:
1. See Table 1-31.
2. See Table 1-32.
3. See Table 1-33.

FMC_VADJ Voltage Control

The FMC_VADJ rail is set to 2.5V. When the KC705 board is powered on, the state of the FMC_VADJ_ON_B signal wired to header J65 is sampled by the Texas Instruments UCD9248 controller U55. If a jumper is installed on J65, signal FMC_VADJ_ON_B is held low, and the TI controller U55 energizes the FMC_VADJ rail at power on.

Because the rail turn on decision is made at power on time based on the presence of the J65 jumper, removing the jumper at J65 after the board is powered up does not affect the 2.5V power delivered to the FMC_VADJ rail and it remains on.

A jumper installed at J65 is the default setting.

If a jumper is not installed on J65, signal FMC_VADJ_ON_B is High, and the KC705 board does not energize the FMC_VADJ 2.5V at power on. In this mode you can control when to turn on FMC_VADJ and to what voltage level (1.8V - 3.3V). With FMC_VADJ off, the FPGA still configures and has access to the TI controller PMBUS (on bank 32) along with the FMC_VADJ_ON_B signal (on bank 15 pin J27). The combination of these allows you to develop code to command the FMC_VADJ rail to be set to something other than the default setting of 2.5V. After the new FMC_VADJ voltage level has been programmed into TI controller U55, the FMC_VADJ_ON_B signal can be driven Low by the user logic and the FMC_VADJ rail comes up at the new FMC_VADJ voltage level. Installing a jumper at J65 after a KC705 board powers up in this mode turns on the FMC_VADJ rail.

For Texas Instruments fusion tools documentation describing PMBUS programming for the UCD9248 digital power controller, see [Ref 20].

Cooling Fan Control

Cooling fan RPM is controlled and monitored by user-created IP in the FPGA using the fan control circuit is shown in Figure 1-35.

FPGA U1 is cooled by a 12V DC fan connected to J61. $12V_{DC}$ is provided to the fan through J61 pin 2. The fan GND return is provided through J61 pin 1 and transistor Q17. Fan speed is controlled by a pulse-width-modulated signal from FPGA U1 pin L26 (on bank 15) driving the gate of Q17. The default unprogrammed FPGA fan operation mode is ON. The fan speed tachometer signal on J61 pin 3 can be monitored on FPGA U1 pin U22 (on bank 14).

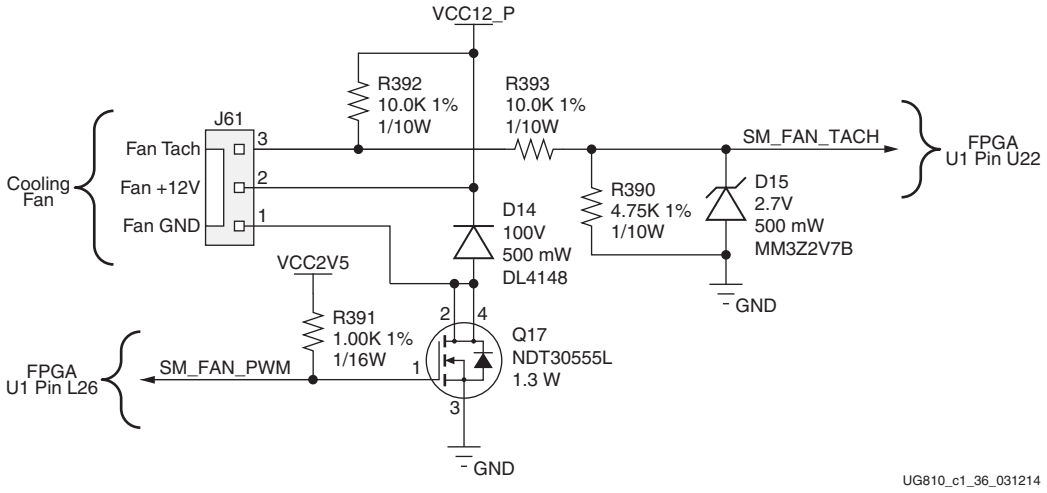

Figure 1-35: **FPGA Cooling Fan Circuit**

Monitoring Voltage and Current

Voltage and current monitoring and control are available for selected power rails through the Texas Instruments Fusion Digital Power GUI. The three onboard TI power controllers (U55 at address 52, U56 at address 53, and U89 at address 54) are wired to the same PMBus. The PMBus connector, J39, is provided for use with the TI USB Interface Adapter PMBus pod (TI part number EVM USB-TO-GPIO), which can be ordered from the TI website [Ref 24], and the associated TI Fusion Digital Power Designer GUI (downloadable from the Texas Instrument website [Ref 25]). This is the simplest and most convenient way to monitor the voltage and current values for the power rail listed in Table 1-31, Table 1-32, and Table 1-33.

In each of these the three tables (one per controller), the Power Good (PG) On Threshold is the set-point at or below which the particular rail is deemed "good". The PG Off Threshold is the set-point at or below which the particular rail is no longer deemed "good". The controller internally ORs these PG conditions together and drives an output PG pin High only if all active rail PG states are "good". The On and Off Delay and rise and fall times are relative to when the board power on-off slide switch SW15 is turned on and off.

The following table defines the voltage and current values for each power rail controlled by the UCD9248 PMBus controller at Address 52 (U55).

Table 1-31: **Power Rail Specifications for UCD9248 PMBus controller at Address 52**

Rail Number	Rail Name	Schematic Rail Name	Nominal V_{OUT} (V)	PG On Threshold (V)	PG Off Threshold (V)	On Delay (ms)	Rise Time (ms)	Off Delay (ms)	Fall Time (ms)	Shutdown Threshold[1]		
										V_{OUT} Over Fault (V)	I_{OUT} Over Fault (A)	Temp Over Fault (°C)
1	Rail #1	VCCINT_FPGA	1	0.9	0.85	0	5	10	1	1.15	20	90
2	Rail #2	VCCAUX	1.8	1.62	1.53	0	5	5	1	2.07	10.41	90
3	Rail #3	VCC3V3	3.3	2.97	2.805	0	5	4	1	3.795	10.41	90
4	Rail #4	VADJ	2.5	2.25	2.125	0	5	3	1	2.875	10.41	90

Notes:

1. The values defined in these columns are the voltage, current, and temperature thresholds that cause the regulator to shut down if the value is exceeded.

The following table defines the voltage and current values for each power rail controlled by the UCD9248 PMBus controller at Address 53 (U56).

Table 1-32: **Power Rail Specifications for UCD9248 PMBus controller at Address 53**

Rail Number	Rail Name	Schematic Rail Name	Nominal V_{OUT} (V)	PG On Threshold (V)	PG Off Threshold (V)	On Delay (ms)	Rise Time (ms)	Off Delay (ms)	Fall Time (ms)	Shutdown Threshold[1]		
										V_{OUT} Over Fault (V)	I_{OUT} Over Fault (A)	Temp Over Fault (°C)
1	Rail #1	VCC2V5_FPGA	2.5	2.25	2.125	0	5	1	1	2.875	10.41	90
2	Rail #2	VCC1V5	1.5	1.35	1.275	0	5	0	1	1.725	10.41	90
3	Rail #3	MGTAVCC	1	0.9	0.85	0	5	7	1	1.45	10.41	90

Table 1-32: **Power Rail Specifications for UCD9248 PMBus controller at Address 53 *(Cont'd)***

Rail Number	Rail Name	Schematic Rail Name	Nominal V_{OUT} (V)	PG On Threshold (V)	PG Off Threshold (V)	On Delay (ms)	Rise Time (ms)	Off Delay (ms)	Fall Time (ms)	Shutdown Threshold[1]		
										V_{OUT} Over Fault (V)	I_{OUT} Over Fault (A)	Temp Over Fault (°C)
4	Rail #4	MGTAVTT	1.2	1.08	1.02	0	5	8	1	1.38	10.41	90

Notes:

1. The values defined in these columns are the voltage, current, and temperature thresholds that cause the regulator to shut down if the value is exceeded.

The following table defines the voltage and current values for each power rail controlled by the UCD9248 PMBus controller at Address 54 (U89).

Table 1-33: **Power Rail Specifications for UCD9248 PMBus controller at Address 54**

Rail Number	Rail Name	Schematic Rail Name	Nominal V_{OUT} (V)	PG On Threshold (V)	PG Off Threshold (V)	On Delay (ms)	Rise Time (ms)	Off Delay (ms)	Fall Time (ms)	Shutdown Threshold[1]		
										V_{OUT} Over Fault (V)	I_{OUT} Over Fault (A)	Temp Over Fault (°C)
1	Rail #1	VCCAUX_IO	2	1.8	1.7	0	5	2	1		10.41	90
2	Rail #2	VCC_BRAM	1	0.9	0.85	0	5	9	1		10.41	90
3	Rail #3	MGTVCCAUX	1.8	1.62	1.53	0	5	6	1		10.41	90

Notes:

1. The values defined in these columns are the voltage, current, and temperature thresholds that cause the regulator to shut down if the value is exceeded.

For more information about the UCD9248PFC, PTD08A010W, PTD08A020W, PTD08D021W, LMZ12002, TL1962ADC, and TPS51200DR power system components, see [Ref 20].

XADC Header

[Figure 1-2, callout 33]

7 series FPGAs provide an analog-to-digital converter (XADC) block. The XADC block includes a dual 12-bit, 1 MSPS analog-to-digital converter (ADC) and on-chip sensors.

See *7 Series FPGAs XADC Dual 12-Bit 1MSPS Analog-to-Digital Converter User Guide* (UG480) [Ref 26] for details on the capabilities of the analog front end.

The following figure shows the KC705 board XADC support features.

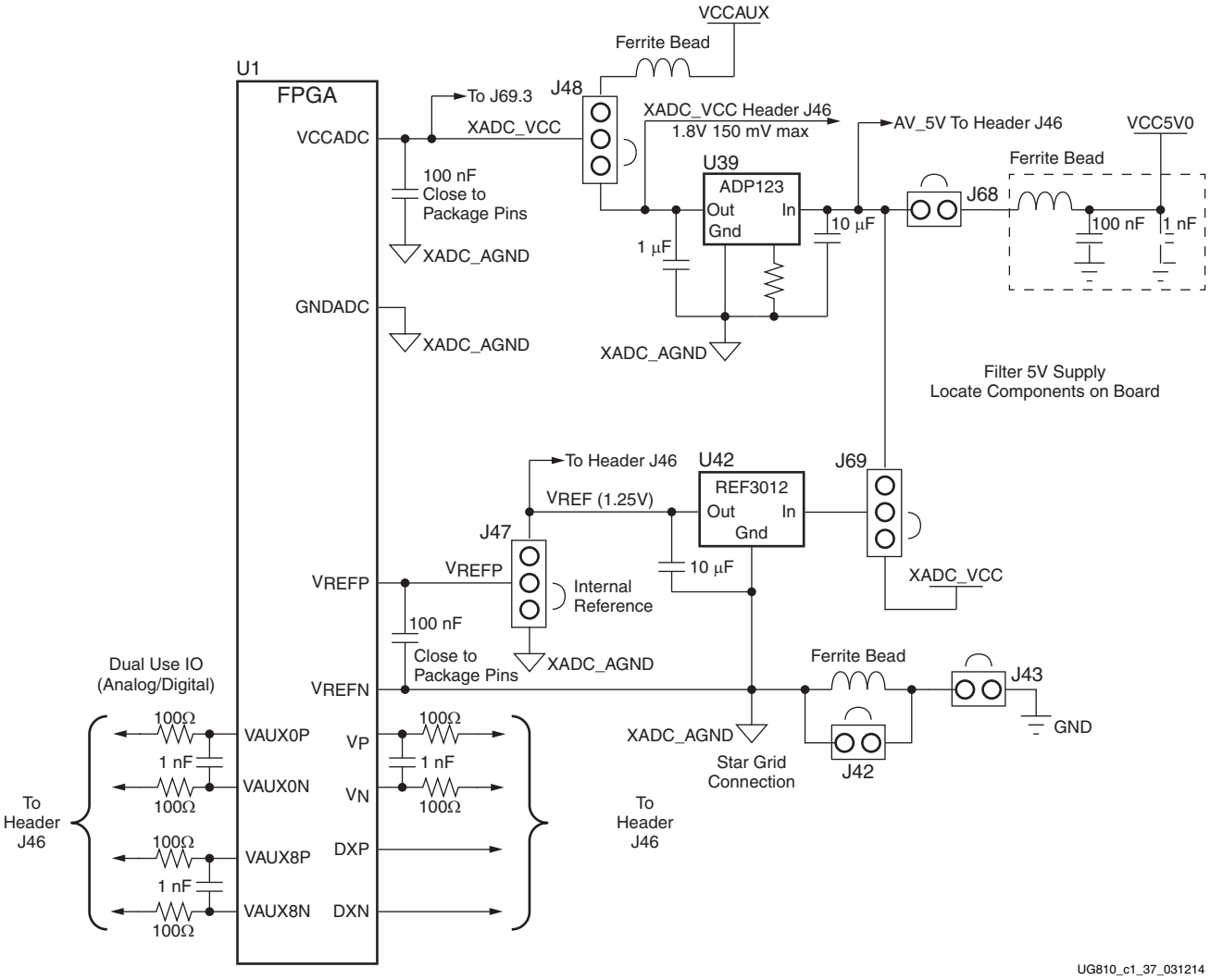

Figure 1-36: **Header XADC_VREF Voltage Source Options**

The KC705 board supports both the internal FPGA sensor measurements and the external measurement capabilities of the XADC. Internal measurements of the die temperature,

VCCINT, VCCAUX, and VCCBRAM are available. The KC705 board VCCINT and VCCBRAM are provided by a common 1.0 V supply.

Jumper J47 can be used to select either an external differential voltage reference (XADC_VREF) or on-chip voltage reference (jumper J47 2–3) for the analog-to-digital converter.

For external measurements an XADC header (J46) is provided. This header can be used to provide analog inputs to the FPGA dedicated VP/VN channel, and to the VAUXP[0]/VAUXN[0], VAUXP[8]/VAUXN[8] auxiliary analog input channels. Simultaneous sampling of Channel 0 and Channel 8 is supported.

A user-provided analog signal multiplexer card can be used to sample additional external analog inputs using the 4 GPIO pins available on the XADC header as multiplexer address lines. The following figure shows the XADC header connections.

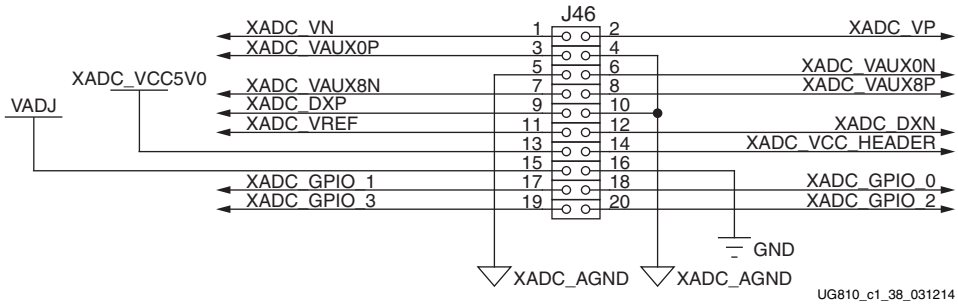

Figure 1-37: **XADC Header (J46)**

The following table describes the XADC header J46 pin functions.

Table 1-34: **XADC Header J46 Pinout**

Net Name	J46 Pin Number	Description
VN, VP	1, 2	Dedicated analog input channel for the XADC.
XADC_VAUX0P, N	3, 6	Auxiliary analog input channel 0. Also supports use as I/O inputs when anti alias capacitor is not present.
XADC_VAUX8N, P	7, 8	Auxiliary analog input channel 8. Also supports use as I/O inputs when anti alias capacitor is not present.
DXP, DXN	9, 12	Access to thermal diode.
XADC_AGND	4, 5, 10	Analog ground reference.
XADC_VREF	11	1.25V reference from the board.
XADC_VCC5V0	13	Filtered 5V supply from board.
XADC_VCC_HEADER	14	Analog 1.8V supply for XADC.
VADJ	15	VCCO supply for bank which is the source of DIO pins.

Table 1-34: **XADC Header J46 Pinout *(Cont'd)***

Net Name	J46 Pin Number	Description
GND	16	Digital Ground (board) Reference
XADC_GPIO_3, 2, 1, 0	19, 20, 17, 18	Digital I/O. These pins should come from the same bank. These I/Os should not be shared with other functions because they are required to support 3-state operation.

Configuration Options

The FPGA on the KC705 board can be configured by the following methods:

- Master BPI (uses the Linear BPI flash memory)
- Master SPI (uses the Quad SPI flash memory)
- JTAG (uses the USB-to-JTAG Bridge or Download cable). See USB JTAG Module for more information

See *7 Series FPGAs Configuration User Guide* (UG470) [Ref 3] for details on configuration modes.

The method used to configure the FPGA is controlled by the mode pin (M2, M1, M0) settings selected through DIP switch SW13.

The following table lists the supported mode switch settings.

Table 1-35: **Mode Switch SW13 Settings**

Configuration Mode	Mode Pins (M[2:0])	Bus Width	CCLK Direction
Master SPI	001	x1, x2, x4	Output
Master BPI	010	x8, x16	Output
JTAG	101	x1	Not Applicable

The following figure shows mode switch SW13.

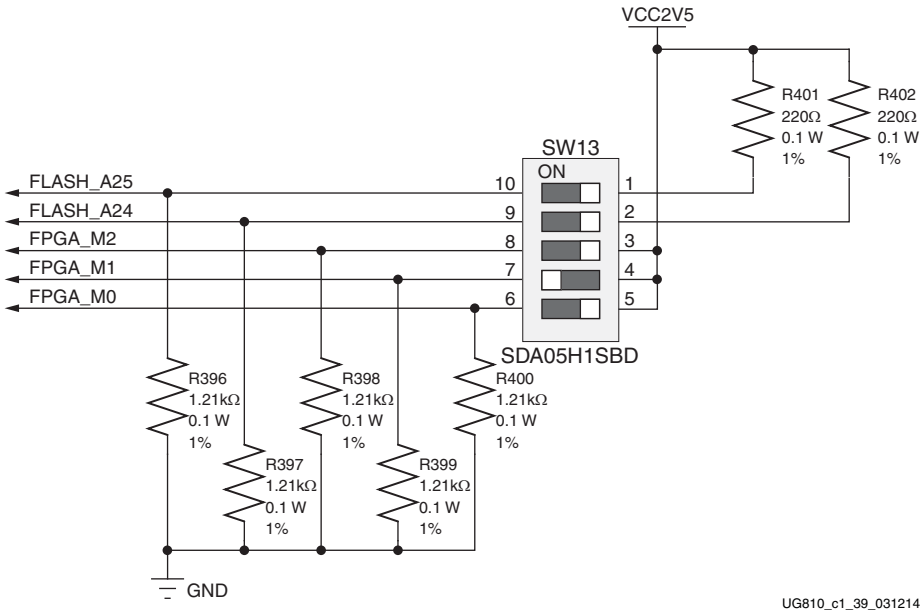

Figure 1-38: **Mode Switch**

The mode pins settings on SW13 determine if the Linear BPI or the Quad SPI flash memory is used for configuring the FPGA. DIP switch SW13 also provides the upper two address bits for the Linear BPI flash memory and can be used to select one of multiple stored configuration bitstreams. Figure 1-39 shows the connectivity between the onboard nonvolatile flash devices used for configuration and the FPGA.

To obtain the fastest configuration speed an external 66 MHz oscillator is wired to the EMCCLK pin of the FPGA. This allows users to create bitstreams that configure the FPGA over the 16-bit datapath from the Linear BPI flash memory at a maximum synchronous read rate of 33 MHz. The bitstream stored in the flash memory must be generated with a BitGen option to divide the EMCCLK by two.

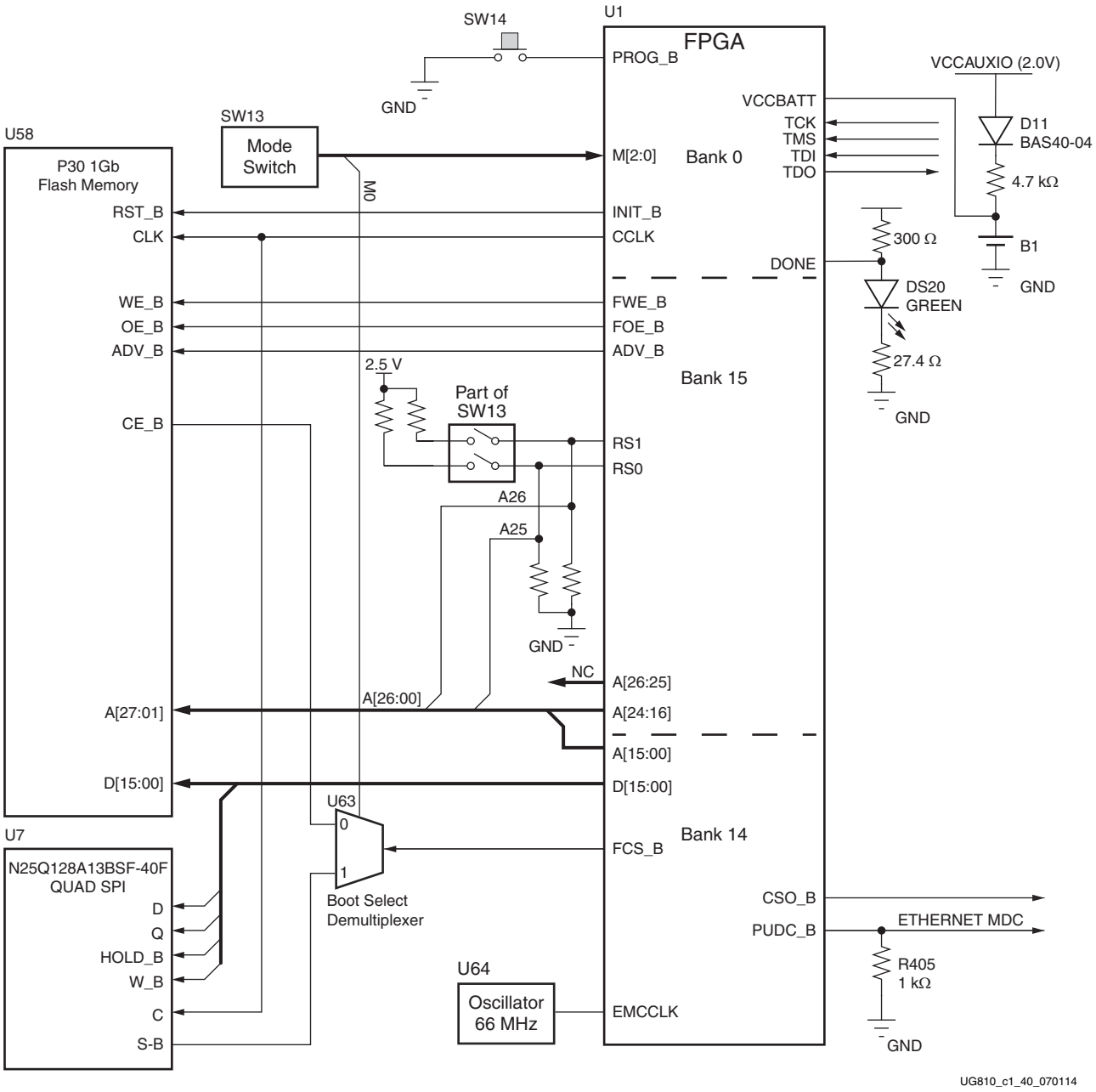

Figure 1-39: **KC705 Board Configuration Circuit**

Default Switch and Jumper Settings

DIP Switch SW11 User GPIO

See Figure 1-2 Item 24 for location of SW11. Default settings are shown in Figure A-1 and details are listed in Table A-1.

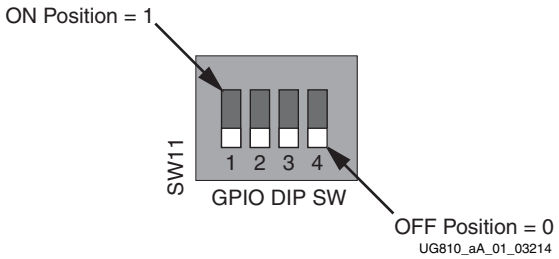

Figure A-1: **SW11 Default Settings**

Table A-1: **SW11 Default Switch Settings**

Position	Function	Default
1	GPIO_DIP_SW3	Off
2	GPIO_DIP_SW2	Off
3	GPIO_DIP_SW1	Off
4	GPIO_DIP_SW0	Off

DIP Switch SW13 Mode and Flash Memory Address Settings

See Figure 1-2 Item 29 for location of SW13. Default settings are shown in Figure A-2 and details are listed in Table A-2.

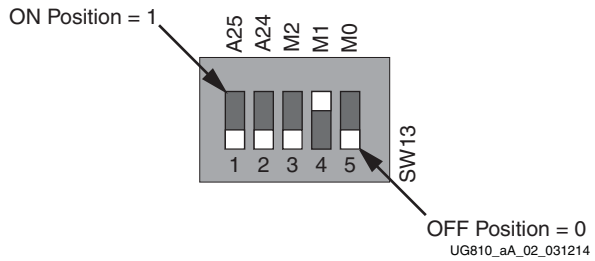

Figure A-2: **SW13 Default Settings**

The default mode setting M[2:0] = `010` selects Master BPI configuration at board power-on.

Table A-2: **SW13 Default Switch Settings**

Position	Function		Default
1	FLASH_A25	A25	Off
2	FLASH_A24	A24	Off
3	FPGA_M2	M2	Off
4	FPGA_M1	M1	On
5	FPGA_M0	M0	Off

Default Jumper Settings

See Figure A-3 for the locations of jumpers listed in Table A-3.

Table A-3: **KC705 Default Jumper Settings**

Callout	Header Reference Designator	Jumper Position	Description	Schematic 0381502 Page
2-pin				
1	J3	1-2	SPI SELECT = Onboard SPI flash memory device	26
2	J42	None	U35 REF3012 XADC_AGND L17 bypassed	31
3	J43	1-2	U35 REF3012 XADC_AGND = GND	31
4	J53	None	U55 UCD9248 RESET_B = LOGIC 1 (NOT RESET)	36

Table A-3: **KC705 Default Jumper Settings *(Cont'd)***

Callout	Header Reference Designator	Jumper Position	Description	Schematic 0381502 Page
5	J56	None	U56 UCD9248 RESET_B = LOGIC 1 (NOT RESET)	40
6	J65	1-2	FMC VADJ = ON	36
7	J68	1-2	XADC_VCC5V0 =VCC5V0 (5V)	31
3-pin				
8	J27	2-3	SFP RX BW = FULL	22
9	J28	2-3	SFP TX BW = FULL	22
10	J29	1-2	U32 EPHY CONFIG5 = LOGIC 1	25
11	J30	1-2	U32 EPHY CONFIG4 = LOGIC 1	25
12	J47	1-2	XADC_VREFP = REF3012 XADC_VREF	31
13	J48	2-3	XADC_VCC = ADP123 1.85V	31
14	J69	1-2	REF3012 VIN = XADC_VCC5V0	31
2x3				
15	J32	5-6	PCIe lane width = 8	21

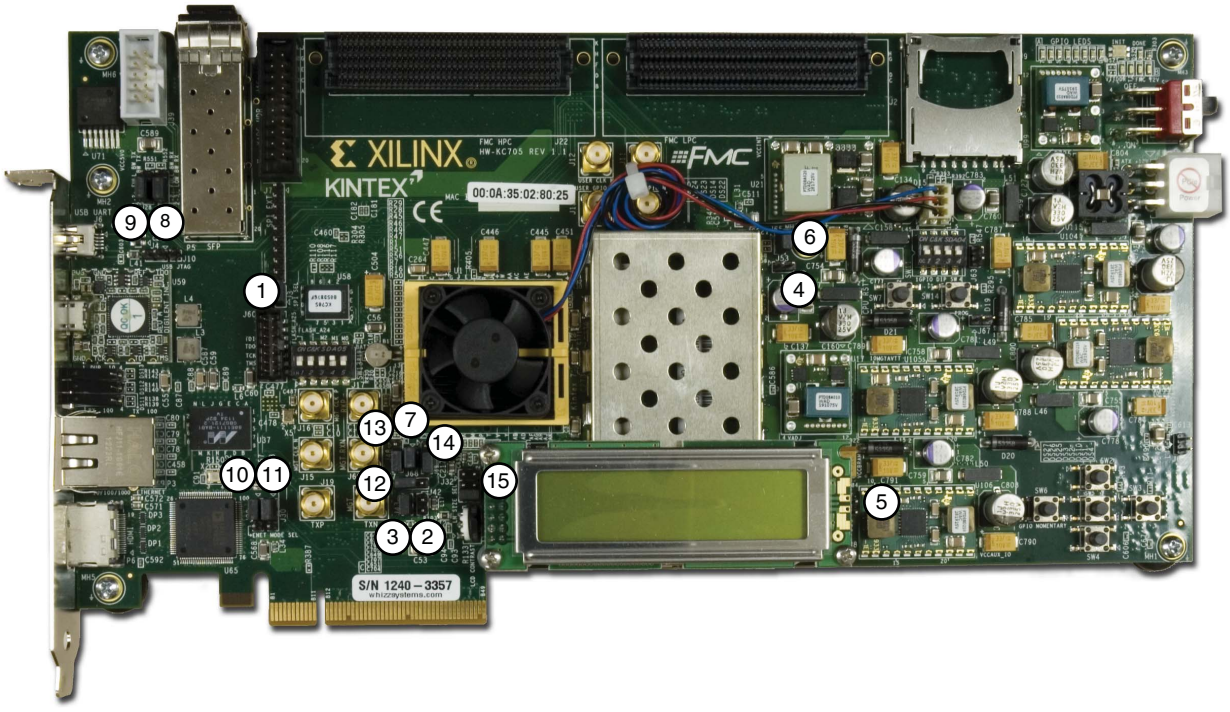

Figure A-3: **KC705 Jumper Locations**

VITA 57.1 FMC Connector Pinouts

The following figure shows the pinout of the FPGA Mezzanine Card (FMC) high pin count (HPC) connector defined by the VITA 57.1 FMC specification. For a description of how the KC705 board implements the FMC specification, see FPGA Mezzanine Card Interface and HPC Connector J22.

	K	J	H	G	F	E	D	C	B	A
1	VREF_B_M2C	GND	VREF_A_M2C	GND	PG_M2C	GND	PG_C2M	GND	RES1	GND
2	GND	CLK3_M2C_P	PRSNT_M2C_L	CLK1_M2C_P	GND	HA01_P_CC	GND	DP0_C2M_P	GND	DP1_M2C_P
3	GND	CLK3_M2C_N	GND	CLK1_M2C_N	GND	HA01_N_CC	GND	DP0_C2M_N	GND	DP1_M2C_N
4	CLK2_M2C_P	GND	CLK0_M2C_P	GND	HA00_P_CC	GND	GBTCLK0_M2C_P	GND	DP9_M2C_P	GND
5	CLK2_M2C_N	GND	CLK0_M2C_N	GND	HA00_N_CC	GND	GBTCLK0_M2C_N	GND	DP9_M2C_N	GND
6	GND	HA03_P	GND	LA00_P_CC	GND	HA05_P	GND	DP0_M2C_P	GND	DP2_M2C_P
7	HA02_P	HA03_N	LA02_P	LA00_N_CC	HA04_P	HA05_N	GND	DP0_M2C_N	GND	DP2_M2C_N
8	HA02_N	GND	LA02_N	GND	HA04_N	GND	LA01_P_CC	GND	DP8_M2C_P	GND
9	GND	HA07_P	GND	LA03_P	GND	HA09_P	LA01_N_CC	GND	DP8_M2C_N	GND
10	HA06_P	HA07_N	LA04_P	LA03_N	HA08_P	HA09_N	GND	LA06_P	GND	DP3_M2C_P
11	HA06_N	GND	LA04_N	GND	HA08_N	GND	LA05_P	LA06_N	GND	DP3_M2C_N
12	GND	HA11_P	GND	LA08_P	GND	HA13_P	LA05_N	GND	DP7_M2C_P	GND
13	HA10_P	HA11_N	LA07_P	LA08_N	HA12_P	HA13_N	GND	GND	DP7_M2C_N	GND
14	HA10_N	GND	LA07_N	GND	HA12_N	GND	LA09_P	LA10_P	GND	DP4_M2C_P
15	GND	HA14_P	GND	LA12_P	GND	HA16_P	LA09_N	LA10_N	GND	DP4_M2C_N
16	HA17_P_CC	HA14_N	LA11_P	LA12_N	HA15_P	HA16_N	GND	GND	DP6_M2C_P	GND
17	HA17_N_CC	GND	LA11_N	GND	HA15_N	GND	LA13_P	GND	DP6_M2C_N	GND
18	GND	HA18_P	GND	LA16_P	GND	HA20_P	LA13_N	LA14_P	GND	DP5_M2C_P
19	HA21_P	HA18_N	LA15_P	LA16_N	HA19_P	HA20_N	GND	LA14_N	GND	DP5_M2C_N
20	HA21_N	GND	LA15_N	GND	HA19_N	GND	LA17_P_CC	GND	GBTCLK1_M2C_P	GND
21	GND	HA22_P	GND	LA20_P	GND	HB03_P	LA17_N_CC	GND	GBTCLK1_M2C_N	GND
22	HA23_P	HA22_N	LA19_P	LA20_N	HB02_P	HB03_N	GND	LA18_P_CC	GND	DP1_C2M_P
23	HA23_N	GND	LA19_N	GND	HB02_N	GND	LA23_P	LA18_N_CC	GND	DP1_C2M_N
24	GND	HB01_P	GND	LA22_P	GND	HB05_P	LA23_N	GND	DP9_C2M_P	GND
25	HB00_P_CC	HB01_N	LA21_P	LA22_N	HB04_P	HB05_N	GND	GND	DP9_C2M_N	GND
26	HB00_N_CC	GND	LA21_N	GND	HB04_N	GND	LA26_P	LA27_P	GND	DP2_C2M_P
27	GND	HB07_P	GND	LA25_P	GND	HB09_P	LA26_N	LA27_N	GND	DP2_C2M_N
28	HB06_P_CC	HB07_N	LA24_P	LA25_N	HB08_P	HB09_N	GND	GND	DP8_C2M_P	GND
29	HB06_N_CC	GND	LA24_N	GND	HB08_N	GND	TCK	GND	DP8_C2M_N	GND
30	GND	HB11_P	GND	LA29_P	GND	HB13_P	TDI	SCL	GND	DP3_C2M_P
31	HB10_P	HB11_N	LA28_P	LA29_N	HB12_P	HB13_N	TDO	SDA	GND	DP3_C2M_N
32	HB10_N	GND	LA28_N	GND	HB12_N	GND	3P3VAUX	GND	DP7_C2M_P	GND
33	GND	HB15_P	GND	LA31_P	GND	HB19_P	TMS	GND	DP7_C2M_N	GND
34	HB14_P	HB15_N	LA30_P	LA31_N	HB16_P	HB19_N	TRST_L	GA0	GND	DP4_C2M_P
35	HB14_N	GND	LA30_N	GND	HB16_N	GND	GA1	12P0V	GND	DP4_C2M_N
36	GND	HB18_P	GND	LA33_P	GND	HB21_P	3P3V	GND	DP6_C2M_P	GND
37	HB17_P_CC	HB18_N	LA32_P	LA33_N	HB20_P	HB21_N	GND	12P0V	DP6_C2M_N	GND
38	HB17_N_CC	GND	LA32_N	GND	HB20_N	GND	3P3V	GND	GND	DP5_C2M_P
39	GND	VIO_B_M2C	GND	VADJ	GND	VADJ	GND	3P3V	GND	DP5_C2M_N
40	VIO_B_M2C	GND	VADJ	GND	VADJ	GND	3P3V	GND	RES0	GND

UG810_aB_01_031214

Figure B-1: **FMC HPC Connector Pinout**

The following figure shows the pinout of the FMC card low pin count (LPC) connector defined by the VITA 57.1 FMC specification. For a description of how the KC705 board implements the FMC specification, see FPGA Mezzanine Card Interface and LPC Connector J2.

	K	J	H	G	F	E	D	C	B	A
1	NC	NC	VREF_A_M2C	GND	NC	NC	PG_C2M	GND	NC	NC
2	NC	NC	PRSNT_M2C_L	CLK1_M2C_P	NC	NC	GND	DP0_C2M_P	NC	NC
3	NC	NC	GND	CLK1_M2C_N	NC	NC	GND	DP0_C2M_N	NC	NC
4	NC	NC	CLK0_M2C_P	GND	NC	NC	GBTCLK0_M2C_P	GND	NC	NC
5	NC	NC	CLK0_M2C_N	GND	NC	NC	GBTCLK0_M2C_N	GND	NC	NC
6	NC	NC	GND	LA00_P_CC	NC	NC	GND	DP0_M2C_P	NC	NC
7	NC	NC	LA02_P	LA00_N_CC	NC	NC	GND	DP0_M2C_N	NC	NC
8	NC	NC	LA02_N	GND	NC	NC	LA01_P_CC	GND	NC	NC
9	NC	NC	GND	LA03_P	NC	NC	LA01_N_CC	GND	NC	NC
10	NC	NC	LA04_P	LA03_N	NC	NC	GND	LA06_P	NC	NC
11	NC	NC	LA04_N	GND	NC	NC	LA05_P	LA06_N	NC	NC
12	NC	NC	GND	LA08_P	NC	NC	LA05_N	GND	NC	NC
13	NC	NC	LA07_P	LA08_N	NC	NC	GND	GND	NC	NC
14	NC	NC	LA07_N	GND	NC	NC	LA09_P	LA10_P	NC	NC
15	NC	NC	GND	LA12_P	NC	NC	LA09_N	LA10_N	NC	NC
16	NC	NC	LA11_P	LA12_N	NC	NC	GND	GND	NC	NC
17	NC	NC	LA11_N	GND	NC	NC	LA13_P	GND	NC	NC
18	NC	NC	GND	LA16_P	NC	NC	LA13_N	LA14_P	NC	NC
19	NC	NC	LA15_P	LA16_N	NC	NC	GND	LA14_N	NC	NC
20	NC	NC	LA15_N	GND	NC	NC	LA17_P_CC	GND	NC	NC
21	NC	NC	GND	LA20_P	NC	NC	LA17_N_CC	GND	NC	NC
22	NC	NC	LA19_P	LA20_N	NC	NC	GND	LA18_P_CC	NC	NC
23	NC	NC	LA19_N	GND	NC	NC	LA23_P	LA18_N_CC	NC	NC
24	NC	NC	GND	LA22_P	NC	NC	LA23_N	GND	NC	NC
25	NC	NC	LA21_P	LA22_N	NC	NC	GND	GND	NC	NC
26	NC	NC	LA21_N	GND	NC	NC	LA26_P	LA27_P	NC	NC
27	NC	NC	GND	LA25_P	NC	NC	LA26_N	LA27_N	NC	NC
28	NC	NC	LA24_P	LA25_N	NC	NC	GND	GND	NC	NC
29	NC	NC	LA24_N	GND	NC	NC	TCK	GND	NC	NC
30	NC	NC	GND	LA29_P	NC	NC	TDI	SCL	NC	NC
31	NC	NC	LA28_P	LA29_N	NC	NC	TDO	SDA	NC	NC
32	NC	NC	LA28_N	GND	NC	NC	3P3VAUX	GND	NC	NC
33	NC	NC	GND	LA31_P	NC	NC	TMS	GND	NC	NC
34	NC	NC	LA30_P	LA31_N	NC	NC	TRST_L	GA0	NC	NC
35	NC	NC	LA30_N	GND	NC	NC	GA1	12P0V	NC	NC
36	NC	NC	GND	LA33_P	NC	NC	3P3V	GND	NC	NC
37	NC	NC	LA32_P	LA33_N	NC	NC	GND	12P0V	NC	NC
38	NC	NC	LA32_N	GND	NC	NC	3P3V	GND	NC	NC
39	NC	NC	GND	VADJ	NC	NC	GND	3P3V	NC	NC
40	NC	NC	VADJ	GND	NC	NC	3P3V	GND	NC	NC

UG810_aB_02_031214

Figure B-2: **FMC LPC Connector Pinout**

Appendix C

Xilinx Design Constraints

The KC705 board Xilinx® design constraints (XDC) file template provides for designs targeting the KC705 board. Net names in the constraints correlate with net names on the latest KC705 board schematic. You must identify the appropriate pins and replace the net names with net names in the user RTL. See *Vivado Design Suite User Guide: Using Constraints* (UG903) [Ref 27] for more information.

The FMC connectors J2 and J22 are connected to 2.5V V_{CCO} banks. Because each FMC card implements customer-specific circuitry, the FMC bank I/O standards must be uniquely defined by each customer.

Note: See the Kintex-7 KC705 Evaluation Kit product page Documentation tab for the latest versions of the FPGA pins constraints files (XDC files).

Board Setup

Installing KC705 Board in a PC Chassis

Installation of the KC705 board inside a computer chassis is required when developing or testing PCI Express functionality.

When the KC705 board is used inside a computer chassis (plugged in to the PCIe® slot), power is provided from the ATX power supply 4-pin peripheral connector through the ATX adapter cable shown in Figure D-1 to J18 on the KC705 board. The Xilinx part number for this cable is 2600304 and is equivalent to Sourcegate Technologies part number AZCBL-WH-1109-RA4. For information on ordering this cable, see [Ref 21].

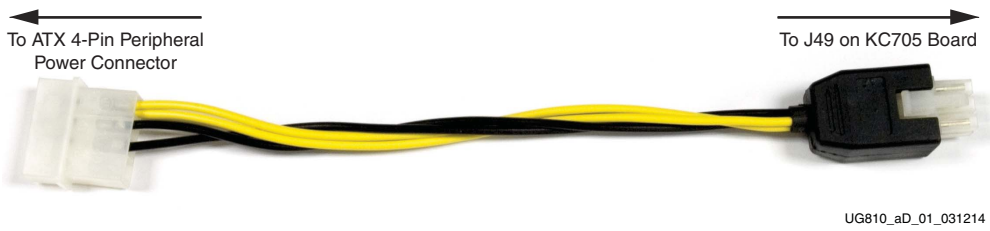

Figure D-1: **ATX Power Supply Adapter Cable**

To install the KC705 board in a PC chassis:

1. On the KC705 board, remove the six screws retaining the six rubber feet with their standoffs, and the PCIe bracket. Reinstall the PCIe bracket using two of the previously removed screws.
2. Power down the host computer and remove the power cord from the PC.
3. Open the PC chassis following the instructions provided with the PC.
4. Select a vacant PCIe expansion slot and remove the expansion cover (at the back of the chassis) by removing the screws on the top and bottom of the cover.
5. Plug the KC705 board into the PCIe connector at this slot.
6. Install the top mounting bracket screw into the PC expansion cover retainer bracket to secure the KC705 board in its slot.

   Note: The KC705 board is taller than standard PCIe cards. Ensure that the height of the card is free of obstructions.

7. Connect the ATX power supply to the KC705 board using the ATX power supply adapter cable as shown in Figure D-1:
   a. Plug the 6-pin 2 x 3 Molex connector on the adapter cable into J49 on the KC705 board.
   b. Plug the 4-pin 1 x 4 peripheral power connector from the ATX power supply into the 4-pin adapter cable connector.
8. Slide the KC705 board power switch SW12 to the ON position. The PC can now be powered on.

Board Specifications

Dimensions

Height 5.5 in (14.0 cm)

Length 10.5 in (26.7 cm)

Note: The KC705 board height exceeds the standard 4.376 in (11.15 cm) height of a PCI Express card.

Environmental

Temperature

Operating: 0°C to +45°C

Storage: –25°C to +60°C

Humidity

10% to 90% non-condensing

Operating Voltage

+12 V_{DC}

XILINX

Appendix F

Regulatory and Compliance Information

Overview

This product is designed and tested to conform to the European Union directives and standards described in this section.

See the Kintex-7 FPGA KC705 Evaluation Kit Xilinx Answer (AR#45934) concerning the CE requirements for the PC Test Environment.

Declaration of Conformity

The Kintex-7 FPGA KC705 Declaration of Conformity is here.

CE Directives

2006/95/EC, *Low Voltage Directive (LVD)*

2004/108/EC, *Electromagnetic Compatibility (EMC) Directive*

CE Standards

EN standards are maintained by the European Committee for Electrotechnical Standardization (CENELEC). IEC standards are maintained by the International Electrotechnical Commission (IEC).

Electromagnetic Compatibility

EN 55022:2010, *Information Technology Equipment Radio Disturbance Characteristics – Limits and Methods of Measurement*

EN 55024:2010, *Information Technology Equipment Immunity Characteristics – Limits and Methods of Measurement*

This is a Class A product and can cause radio interference. In a domestic environment, the user might be required to take adequate corrective measures.

Safety

IEC 60950-1:2005, *Information technology equipment – Safety, Part 1: General requirements*

EN 60950-1:2006, *Information technology equipment – Safety, Part 1: General requirements*

Markings



In August of 2005, the European Union (EU) implemented the EU WEEE Directive 2002/96/EC and later the WEEE Recast Directive 2012/19/EU requiring Producers of electronic and electrical equipment (EEE) to manage and finance the collection, reuse, recycling and to appropriately treat WEEE that the Producer places on the EU market after August 13, 2005. The goal of this directive is to minimize the volume of electrical and electronic waste disposal and to encourage re-use and recycling at the end of life.

Xilinx has met its national obligations to the EU WEEE Directive by registering in those countries to which Xilinx is an importer. Xilinx has also elected to join WEEE Compliance Schemes in some countries to help manage customer returns at end-of-life.

If you have purchased Xilinx-branded electrical or electronic products in the EU and are intending to discard these products at the end of their useful life, please do not dispose of them with your other household or municipal waste. Xilinx has labeled its branded electronic products with the WEEE Symbol to alert our customers that products bearing this label should not be disposed of in a landfill or with municipal or household waste in the EU.

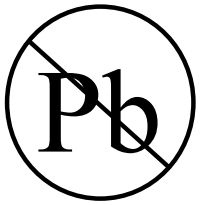

This product complies with Directive 2002/95/EC on the restriction of hazardous substances (RoHS) in electrical and electronic equipment.



This product complies with CE Directives 2006/95/EC, *Low Voltage Directive (LVD)* and 2004/108/EC, *Electromagnetic Compatibility (EMC) Directive*.

Additional Resources and Legal Notices

Xilinx Resources

For support resources such as Answers, Documentation, Downloads, and Forums, see Xilinx Support.

Solution Centers

See the Xilinx Solution Centers for support on devices, software tools, and intellectual property at all stages of the design cycle. Topics include design assistance, advisories, and troubleshooting tips.

Documentation Navigator and Design Hubs

Xilinx® Documentation Navigator provides access to Xilinx documents, videos, and support resources, which you can filter and search to find information. To open the Xilinx Documentation Navigator (DocNav):

- From the Vivado® IDE, select **Help > Documentation and Tutorials**.
- On Windows, select **Start > All Programs > Xilinx Design Tools > DocNav**.
- At the Linux command prompt, enter `docnav`.

Xilinx Design Hubs provide links to documentation organized by design tasks and other topics, which you can use to learn key concepts and address frequently asked questions. To access the Design Hubs:

- In the Xilinx Documentation Navigator, click the **Design Hubs View** tab.
- On the Xilinx website, see the Design Hubs page.

Note: For more information on Documentation Navigator, see the Documentation Navigator page on the Xilinx website.

References

The most up to date information related to the KC705 board and its documentation is available on these websites:

Kintex-7 KC705 FPGA KC705 Evaluation Kit

Kintex-7 KC705 FPGA Evaluation Kit documentation

Kintex-7 KC705 FGPA Evaluation Kit Master Answer Record (AR 45934)

These documents and sites provide supplemental material useful with this guide:

1. *7 Series FPGAs Overview* (DS180)
2. *Kintex-7 FPGAs Data Sheet: DC and AC Switching Characteristics* (DS182)
3. *7 Series FPGAs Configuration User Guide* (UG470)
4. *7 Series FPGAs Memory Interface Solutions User Guide* (UG586)
5. *7 Series FPGAs Memory Resources User Guide* (UG473)
6. Micron Technology: www.micron.com
   (PC28F00AP30TF, N25Q128A13BSF40F, MT25QL128ABA8ESF-0SIT, and MT8JTF12864HZ-1G6G1)
7. Si Time: www.sitime.com
   (SiT9102)
8. Silicon Labs: www.silabs.com
   (Si570, Si5324C)
9. *KC705 Si570 Programming* (XTP204)
10. *KC705 Si570 Programming Design Files* (RDF0194)
11. *KC705 Si570 Fixed Frequencies* (XTP203)
12. *KC705 Si570 Fixed Frequencies Design Files* (RDF0193)
13. *7 Series FPGAs GTX Transceivers User Guide* (UG476)
14. *7 Series FPGAs Integrated Block for PCI Express LogiCORE IP Product Guide* (PG054)
15. *Tri-Mode Ethernet MAC LogiCORE IP Product Guide* (PG051)
16. Marvell Semiconductor: www.marvell.com and www.marvell.com/transceivers/alaska-gbe/
    (88E1111)
17. Integrated Device Technology: www.idt.com
    (ICS844021-01)

18. Analog Devices: www.analog.com/en/index.html
    (ADP123, ADV7511KSTZ-P)
19. Displaytech: www.displaytech-us.com
    (S162D)
20. Texas Instruments: www.ti.com, www.ti.com/fusiondocs, and www.ti.com/ww/en/analog/digital-power/index.html
    (UCD9248PFC, PTD08A010W, PTD08A020W, PTD08D210W, LMZ12002, TL1962ADC, TPS51200DR, PCA9548, TXS0108E)
21. Sourcegate Technologies: www.sourcegate.net. To order the custom Sourcegate cable, contact sgt-sales@sourcegate.net, +65 6483 2878 for price and availability.

    Note: The Xilinx ATX cable part number 2600304 is manufactured by Sourcegate Technologies and is equivalent to the Sourcegate Technologies part number AZCBL-WH-11009. Sourcegate only manufactures the latest revision, which is currently A4. This is a custom cable and cannot be ordered from the Sourcegate website.
22. *7 Series FPGAs PCB Design Guide* (UG483)
23. Samtec: www.samtec.com.
    (SEAF series connectors)
24. Texas Instruments: www.ti.com/xilinx_usb
    (USB-TO-GPIO Interface Adapter EVM, Part Number USB-TO-GPIO)
25. Texas Instruments: www.ti.com/fusion-gui
    (TI Fusion Digital Power Designer GUI)
26. *7 Series FPGAs and Zynq-7000 SoC XADC Dual 12-Bit 1 MSPS Analog-to-Digital Converter User Guide* (UG480)
27. *Vivado Design Suite User Guide Using Constraints* (UG903)
28. *7 Series FPGAs Packaging and Pinout Product Specifications* (UG475)

Please Read: Important Legal Notices

The information disclosed to you hereunder (the “Materials”) is provided solely for the selection and use of Xilinx products. To the maximum extent permitted by applicable law: (1) Materials are made available "AS IS" and with all faults, Xilinx hereby DISCLAIMS ALL WARRANTIES AND CONDITIONS, EXPRESS, IMPLIED, OR STATUTORY, INCLUDING BUT NOT LIMITED TO WARRANTIES OF MERCHANTABILITY, NON-INFRINGEMENT, OR FITNESS FOR ANY PARTICULAR PURPOSE; and (2) Xilinx shall not be liable (whether in contract or tort, including negligence, or under any other theory of liability) for any loss or damage of any kind or nature related to, arising under, or in connection with, the Materials (including your use of the Materials), including for any direct, indirect, special, incidental, or consequential loss or damage (including loss of data, profits, goodwill, or any type of loss or damage suffered as a result of any action brought by a third party) even if such damage or loss was reasonably foreseeable or Xilinx had been advised of the possibility of the same. Xilinx assumes no obligation to correct any errors contained in the Materials or to notify you of updates to the Materials or to product specifications. You may not reproduce, modify, distribute, or publicly display the Materials without prior written consent. Certain products are subject to the terms and conditions of Xilinx’s limited warranty, please refer to Xilinx’s Terms of Sale which can be viewed at https://www.xilinx.com/legal.htm#tos; IP cores may be subject to warranty and support terms contained in a license issued to you by Xilinx. Xilinx products are not designed or intended to be fail-safe or for use in any application requiring fail-safe performance; you assume sole risk and liability for use of Xilinx products in such critical applications, please refer to Xilinx’s Terms of Sale which can be viewed at https://www.xilinx.com/legal.htm#tos.

AUTOMOTIVE APPLICATIONS DISCLAIMER

AUTOMOTIVE PRODUCTS (IDENTIFIED AS “XA” IN THE PART NUMBER) ARE NOT WARRANTED FOR USE IN THE DEPLOYMENT OF AIRBAGS OR FOR USE IN APPLICATIONS THAT AFFECT CONTROL OF A VEHICLE (“SAFETY APPLICATION”) UNLESS THERE IS A SAFETY CONCEPT OR REDUNDANCY FEATURE CONSISTENT WITH THE ISO 26262 AUTOMOTIVE SAFETY STANDARD (“SAFETY DESIGN”). CUSTOMER SHALL, PRIOR TO USING OR DISTRIBUTING ANY SYSTEMS THAT INCORPORATE PRODUCTS, THOROUGHLY TEST SUCH SYSTEMS FOR SAFETY PURPOSES. USE OF PRODUCTS IN A SAFETY APPLICATION WITHOUT A SAFETY DESIGN IS FULLY AT THE RISK OF CUSTOMER, SUBJECT ONLY TO APPLICABLE LAWS AND REGULATIONS GOVERNING LIMITATIONS ON PRODUCT LIABILITY.

© Copyright 2012–2019 Xilinx, Inc. Xilinx, the Xilinx logo, Artix, ISE, Kintex, Spartan, Virtex, Vivado, Zynq, and other designated brands included herein are trademarks of Xilinx in the United States and other countries. All other trademarks are the property of their respective owners.