DASH NO.	M CODE	MADE FROM

GSD

KC-99-135-M06

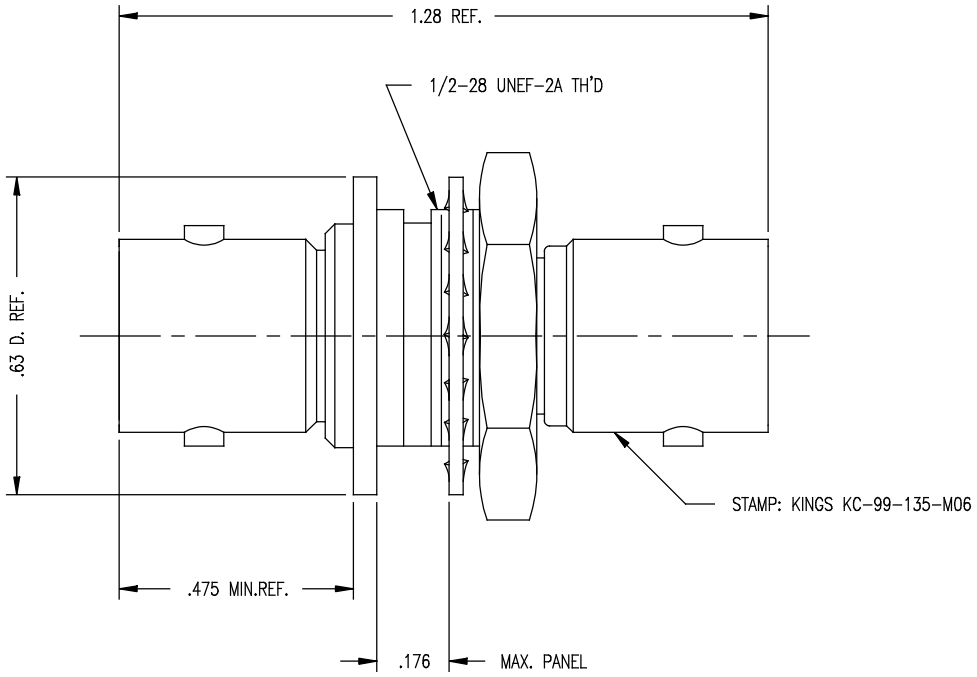

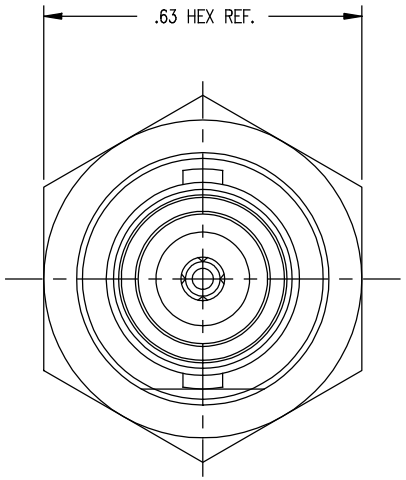

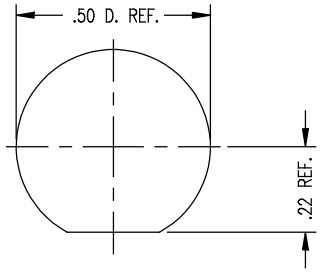

MOUNTING HOLE

NOTES:
1. MATERIALS:
   INSULATORS–TEFLON, ASTM–B–4894
   LOCKWASHER–PHOSPHOR BRONZE, ASTM–B–103
   CENTER CONTACT–BER. COP., ASTM–B–196
   ALL OTHER METAL PARTS–BRASS, ASTM–B16
2. FINISHES:
   CENTER CONTACT–GOLD PLATE PER MIL–G–45204
   ALL OTHER METAL PARTS–KINGS TARNISH RESISTANT NICKEL FINISH (TR–5)
3. ELECTRICAL CHARACTERISTICS:
   NOMINAL IMPENDANCE–50 OHMS
   WORKING VOLTAGE–500 VRMS
   FREQUENCY RANGE–DC TO 4 GHZ

UNLESS OTHERWISE SPECIFIED
1. TOLERANCES: FRACTIONS & 2 PLACE DECIMALS ± .010
   3 PLACE DECIMALS ± .004 ANGLES ± 0° 30'
   T.I.R. CONCENTRICITY OF ANY 2 DIAMETERS MAY NOT EXCEED HALF THE SUM OF THEIR TOLERANCES.
2. REMOVE ALL BURRS, BREAK SHARP EDGES .005 MAX.
3. NO FILLETS PERMITTED.
4. SURFACE ROUGHNESS 63 MICROINCHES RMS MAX.
5. ALL DIMENSIONS PRIOR TO PLATING.
6. ALL PLATING IN ACCORDANCE WITH KER 10004.
7. ALL LEAD THREADS TO BE CHAMFERED 45° TO ROOT DIAMETER.

GSD

REVISIONS

ISSUE	CHANGES
1	CN 36716 C REDRAWN KH 12/06/95
2	CN 37888 B GEH 09/02/99

SCALE 4:1

APPROX SURFACE AREA

USED ON

REF:

BNC (F–F) BULKHEAD ADAPTER
ISOLATED GROUND

DRAWN	KH	DATE	06/14/90
DESIGN	MJB	DATE	06/19/90
APPR.		DATE	

KINGS
ELECTRONICS CO., INC.
ROCK HILL, SOUTH CAROLINA 29730

KC–99–135–M06