KBP005M – KBP10M

1.5A GLASS PASSIVATED BRIDGE RECTIFIER

Features

- Glass Passivated Die Construction
- Low Forward Voltage Drop
- High Current Capability
- High Reliability
- High Surge Current Capability
- Ideal for Printed Circuit Boards

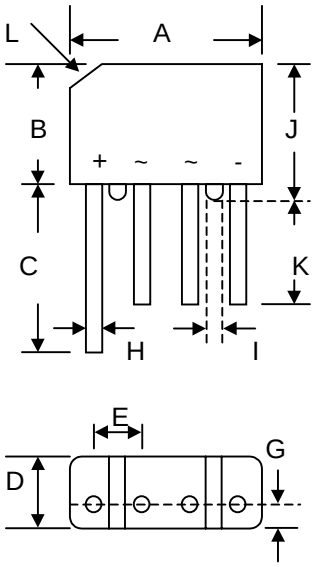

KBP		
Dim	**Min**	**Max**
A	14.22	15.24
B	10.67	11.68
C	15.2	—
D	4.57	5.08
E	3.60	4.10
G	2.16	2.67
H	0.76	0.86
I	1.52	—
J	11.68	12.7
K	12.7	—
L	3.2 x 45° Typical	
All Dimensions in mm		

Mechanical Data

- Case: Molded Plastic
- Terminals: Plated Leads Solderable per MIL-STD-202, Method 208
- Polarity: As Marked on Body
- Weight: 1.7 grams (approx.)
- Mounting Position: Any
- Marking: Type Number

Maximum Ratings and Electrical Characteristics @T_A=25°C unless otherwise specified

Single Phase, half wave, 60Hz, resistive or inductive load.
For capacitive load, derate current by 20%.

Characteristic	Symbol	KBP 005M	KBP 01M	KBP 02M	KBP 04M	KBP 06M	KBP 08M	KBP 10M	Unit
Peak Repetitive Reverse Voltage Working Peak Reverse Voltage DC Blocking Voltage	V_{RRM} V_{RWM} V_R	50	100	200	400	600	800	1000	V
RMS Reverse Voltage	$V_{R(RMS)}$	35	70	140	280	420	560	700	V
Average Rectified Output Current (Note 1) @T_A = 50°C	I_O	1.5							A
Non-Repetitive Peak Forward Surge Current 8.3ms Single half sine-wave superimposed on rated load (JEDEC Method)	I_{FSM}	50							A
Forward Voltage (per element) @I_F = 1.5A	V_{FM}	1.1							V
Peak Reverse Current @T_A = 25°C At Rated DC Blocking Voltage @T_A = 100°C	I_{RM}	10 500							µA
Rating for Fusing (t<8.3ms)	I^2t	10							A^2s
Typical Junction Capacitance per element (Note 2)	C_j	15							pF
Typical Thermal Resistance (Note 3)	$R_{\theta JA}$	28							K/W
Operating and Storage Temperature Range	T_j, T_{STG}	-55 to +150							°C

Note: 1. Leads maintained at ambient temperature at a distance of 9.5mm from the case.
2. Measured at 1.0 MHz and applied reverse voltage of 4.0V D.C.
3. Thermal resistance junction to ambient mounted on PC board with 12mm^2 copper pad.

© 2002 Won-Top Electronics

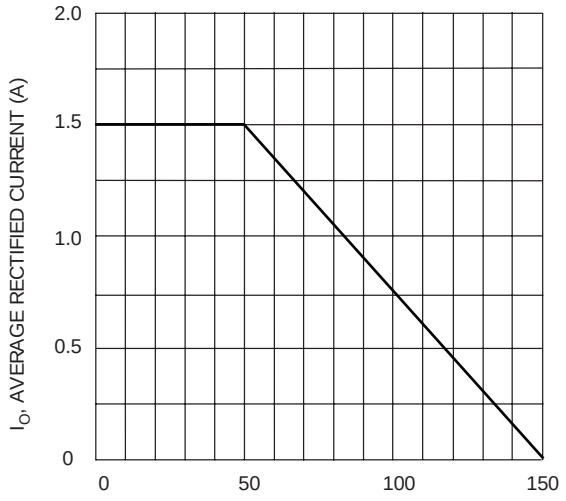

Fig. 1 Forward Current Derating Curve

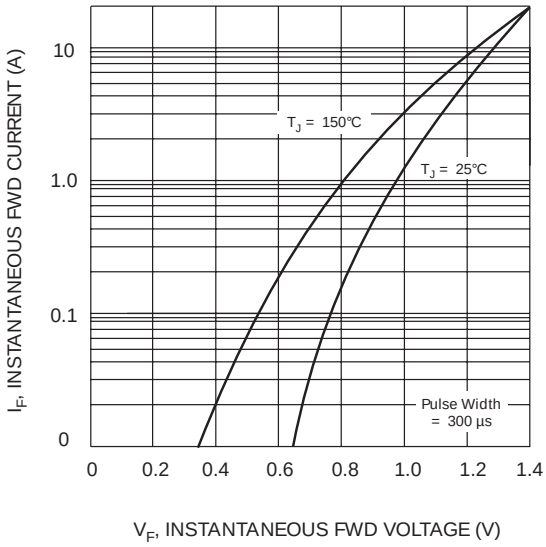

Fig. 2 Typical Fwd Characteristics

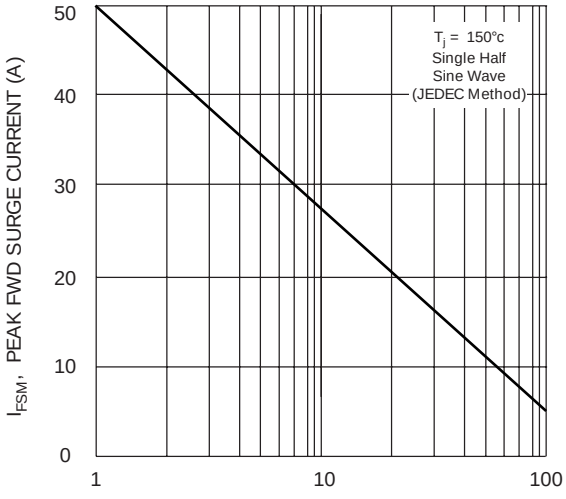

Fig. 3 Max Non-Repetitive Peak Fwd Surge Current

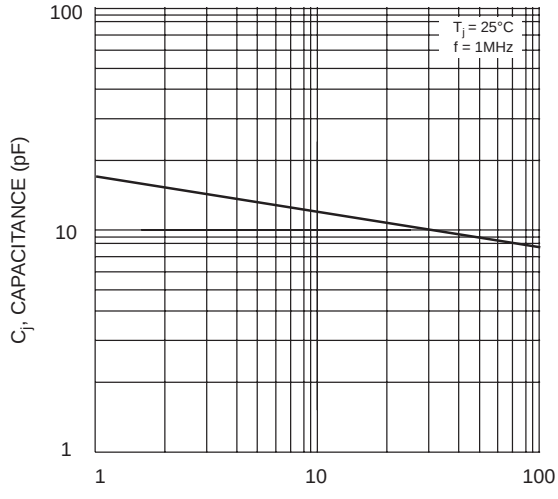

Fig. 4 Typical Junction Capacitance

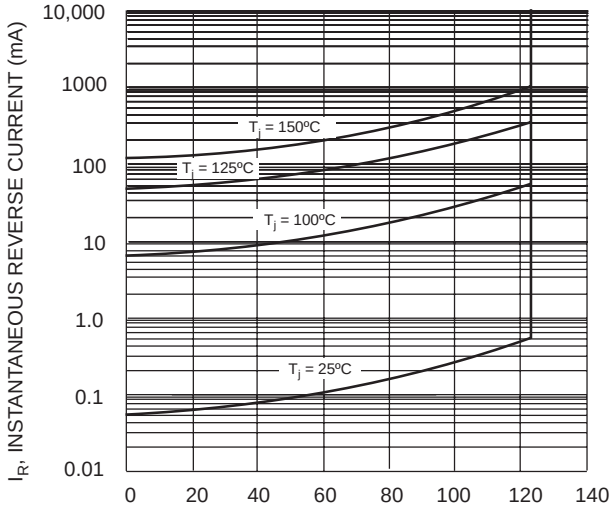

Fig. 5 Typical Reverse Characteristics

 © 2002 Won-Top Electronics

ORDERING INFORMATION

Product No.	Package Type	Shipping Quantity
KBP005M	SIL Bridge	1000 Units/Box
KBP01M	SIL Bridge	1000 Units/Box
KBP02M	SIL Bridge	1000 Units/Box
KBP04M	SIL Bridge	1000 Units/Box
KBP06M	SIL Bridge	1000 Units/Box
KBP08M	SIL Bridge	1000 Units/Box
KBP10M	SIL Bridge	1000 Units/Box

Shipping quantity given is for minimum packing quantity only. For minimum order quantity, please consult the Sales Department.

Won-Top Electronics Co., Ltd (WTE) has checked all information carefully and believes it to be correct and accurate. However, WTE cannot assume any responsibility for inaccuracies. Furthermore, this information does not give the purchaser of semiconductor devices any license under patent rights to manufacturer. WTE reserves the right to change any or all information herein without further notice.

WARNING: DO NOT USE IN LIFE SUPPORT EQUIPMENT. WTE power semiconductor products are not authorized for use as critical components in life support devices or systems without the express written approval.

Won-Top Electronics Co., Ltd.
No. 44 Yu Kang North 3rd Road, Chine Chen Dist., Kaohsiung, Taiwan
Phone: 886-7-822-5408 or 886-7-822-5410
Fax: 886-7-822-5417
Email: sales@wontop.com
Internet: http://www.wontop.com

We power your everyday.

 © 2002 Won-Top Electronics