NEW

High-Current Connectors for Solar Panel Module

KB1 Series

CONNECTOR
MB-0220-1
December 2010

RoHS Compliant

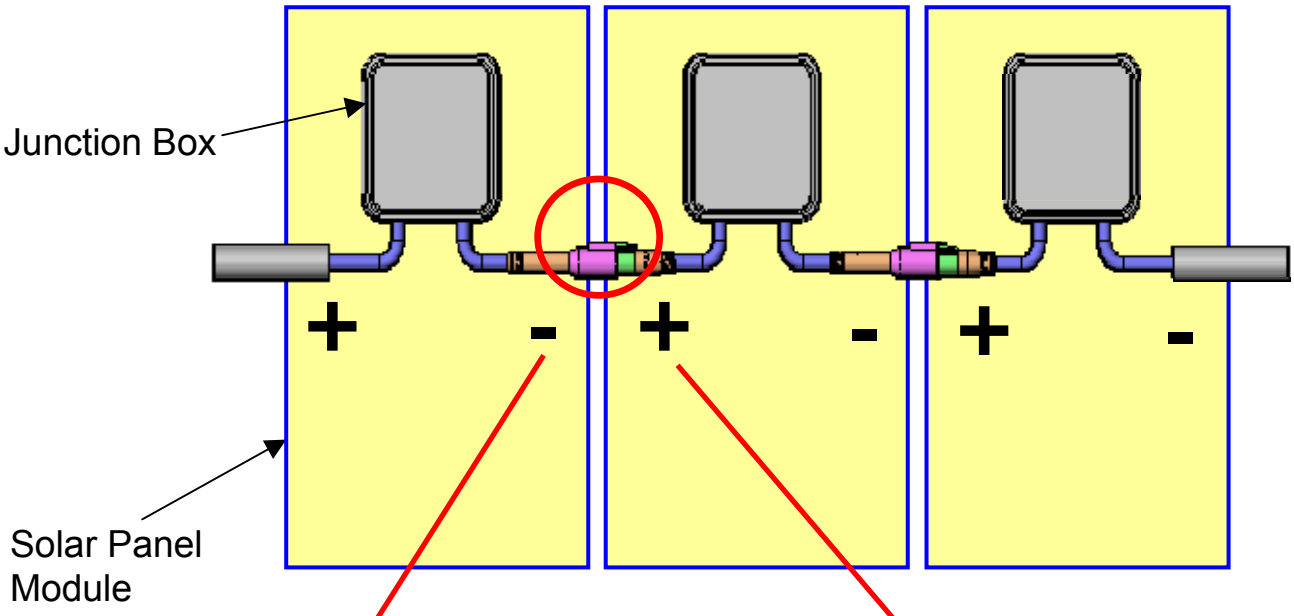

Connections of Solar Panel Modules (Reference)

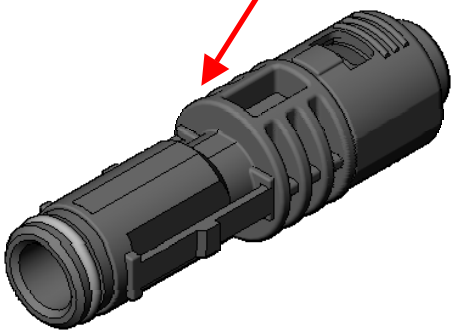

Pin Connector (-)



Socket Connector (+)

Summary

The KB1 Series are high-current interconnect connectors for solar panel modules. Just align the connectors, and mating is smoothly completed with an audible and tactile click. The KB1 Series can be easily assembled on site because of the small number of parts.

JAE PMK Div. Proprietary. Copyright © 2010, Japan Aviation Electronics Industry, Ltd.

Features

■Appearance: Compact size (17.8mm in diameter).

■Lock mechanism (mating): Center impeller type prevents deformation of the spring caused by rough mating and un-mating.

■Smooth insertion and mating of the connectors within 180 Deg. C of rotation. (Please refer to supporting documents)

■Lock mechanism (un-mating): Simple lock structure, clear click sound when releasing, one action to un-mate.

General Specifications

■Number of Contacts: 1 pos.

■Rated Current: 25 A max. (KB1-12-PC/SC)
10A max. (KB1-12-PC2/SC2)

■Rated Voltage: 1000 VDC / 6000 VAC; Pollution Degree: 3; Over Voltage Category: III

■Contact Resistance: 1.5 mΩ max. (KB1-12-PC/SC), 4 mΩ max. (KB1-12-PC2/SC2)

■Dielectric Withstanding Voltage: 6,000 V

■Operating Temperature Range: -40 Deg. C to 90 Deg. C

■Protection Degree: IP-67 (when mated)

Materials and Finishes

Component	Material and Finish
Contact	Copper Alloy / Silver Plating
Insulator	Synthetic Resin
Bushing	Synthetic Rubber
Gland Nut	Synthetic Resin
“O” ring	Synthetic Resin

JAE PMK Div. Proprietary. Copyright © 2010, Japan Aviation Electronics Industry, Ltd.

Ordering Information

Pin Connector

KB1 J S 01 P G *

- KB1: SERIES
- J: CABLE CONNECTING TYPE
- S: SHELL SIZE
- 01: NUMBER OF CONTACTS
- P: CRIMP TYPE PIN CONTACT
- G: CONTACT SIZE
- *: APPLICABLE CABLE O.D.
  1: 7.0 mm in dia.,
  2: 6.4 mm in dia.

Part Number	Drawing No.	Cable Size
KB1JS01PG1	SJ108904	7.0 mm in dia.
KB1JS01PG2		6.4 mm in dia.

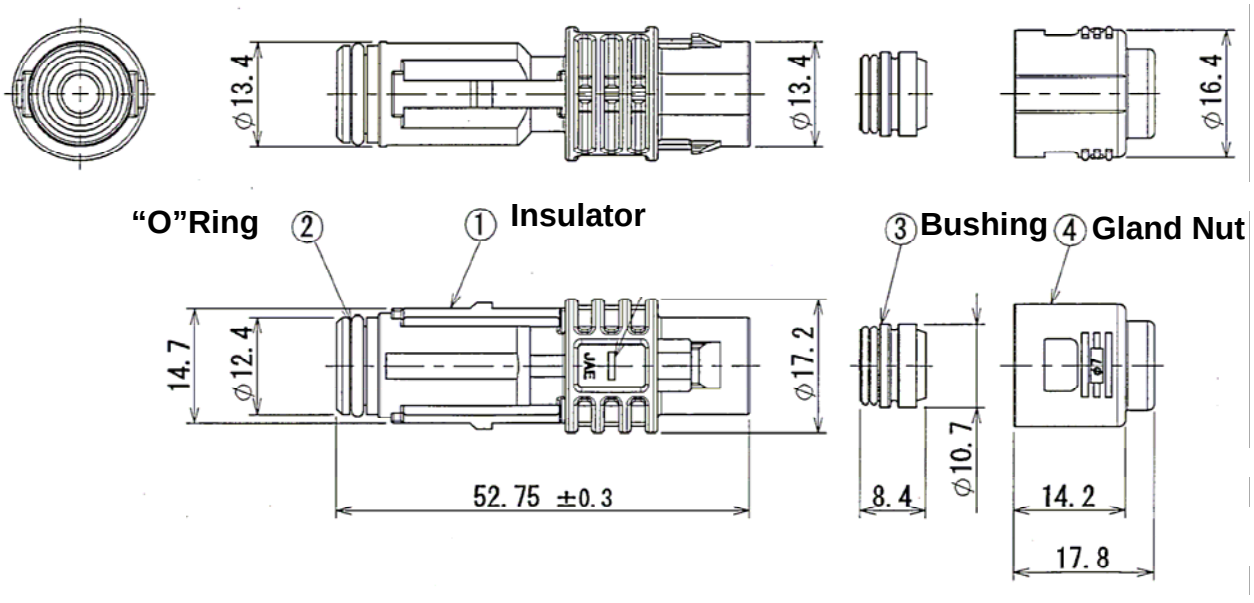

JAE PMK Div. Proprietary. Copyright © 2010, Japan Aviation Electronics Industry, Ltd.

Ordering Information

Socket Connector

KB1 J S 01 S G * L

- KB1: SERIES
- J: SHELL SIZE
- S: CABLE CONNECTING TYPE
- 01: NUMBER OF CONTACTS
- S: CRIMP TYPE SOCKET CONTACT
- G: CONTACT SIZE
- *: APPLICABLE CABLE O.D.
  1: 7.0 mm in dia.
  2: 6.4 mm in dia.
- L: WITH UNLOCK TAB

Part Number	Drawing No.	Cable Size
KB1JS01SGIL	SJ110287	7.0 mm in dia.
KB1JS01SG2L		6.4 mm in dia.

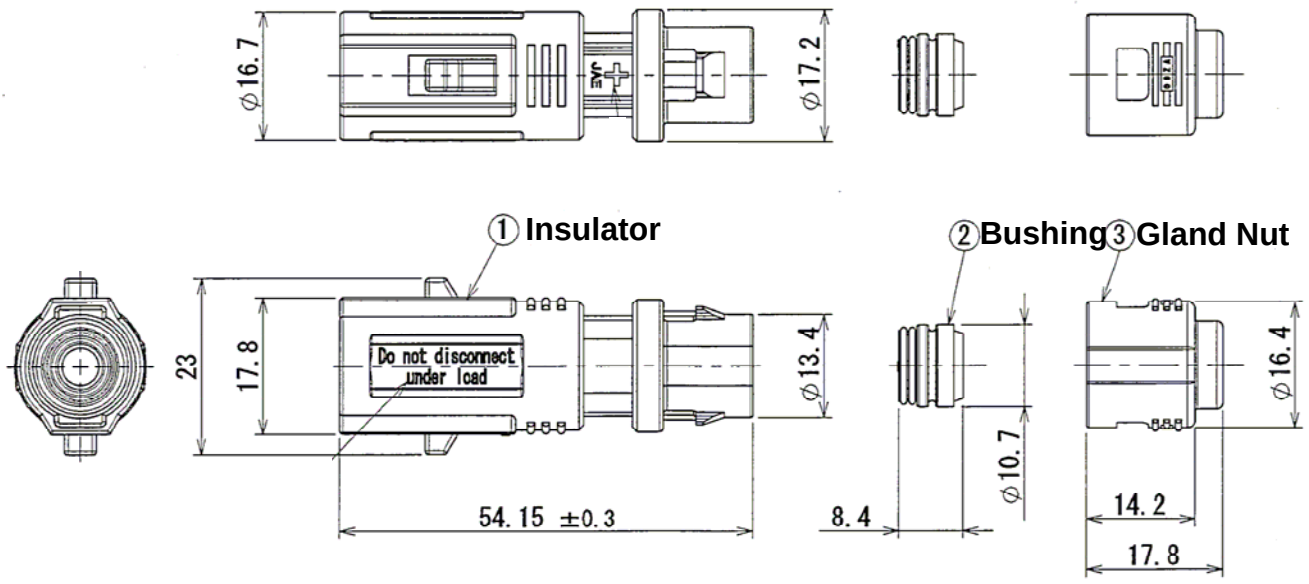

JAE PMK Div. Proprietary. Copyright © 2010, Japan Aviation Electronics Industry, Ltd.

Ordering Information

Pin Contact

Part Number	Drawing No.	Conductor Size	Quantity
KB1-12-PC-1500	SJ108969	3.5 to 4 mm^2	1,500 pcs/reel

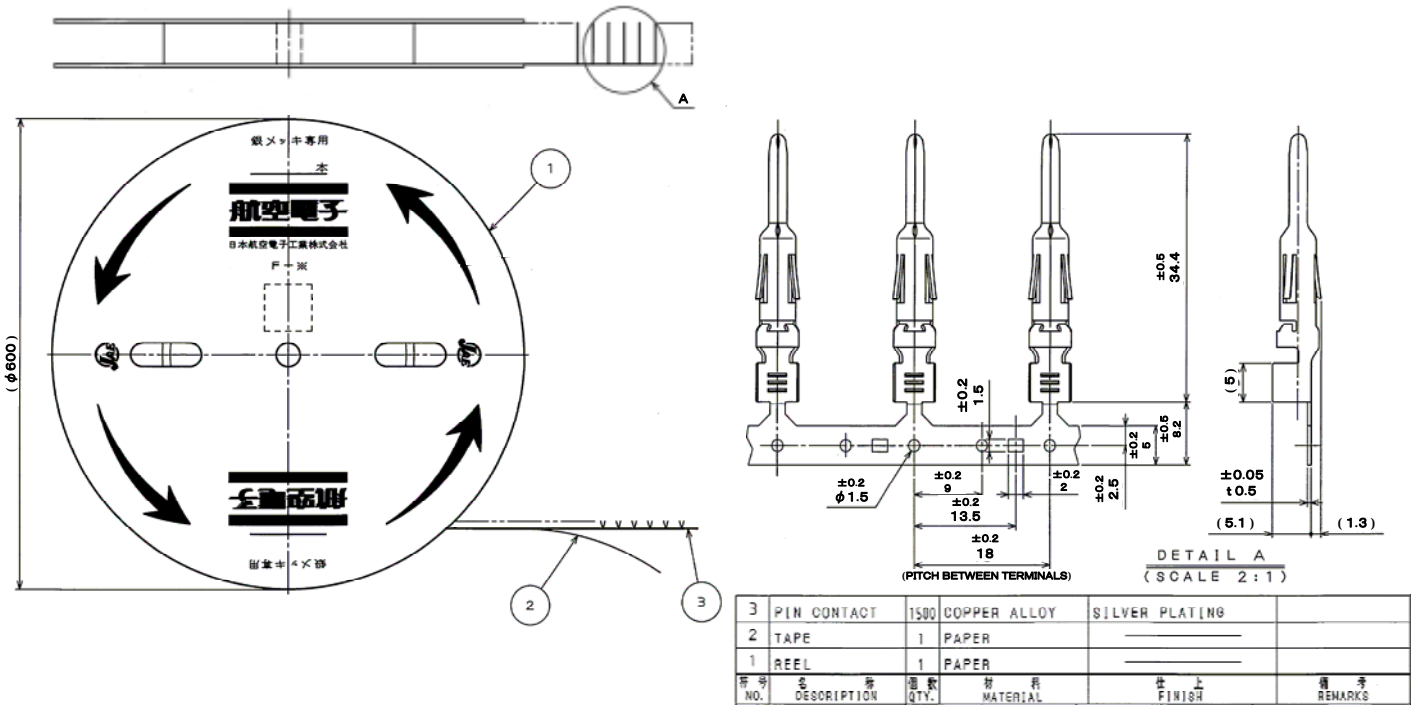

NO.	DESCRIPTION	QTY.	MATERIAL	FINISH	REMARKS
3	PIN CONTACT	1500	COPPER ALLOY	SILVER PLATING	
2	TAPE	1	PAPER	———	
1	REEL	1	PAPER	———	

Part Number	Drawing No.	Conductor Size	Quantity
KB1-12-PC2-2000	SJ110313	2.0 to 2.5 mm^2	2,000 pcs/reel

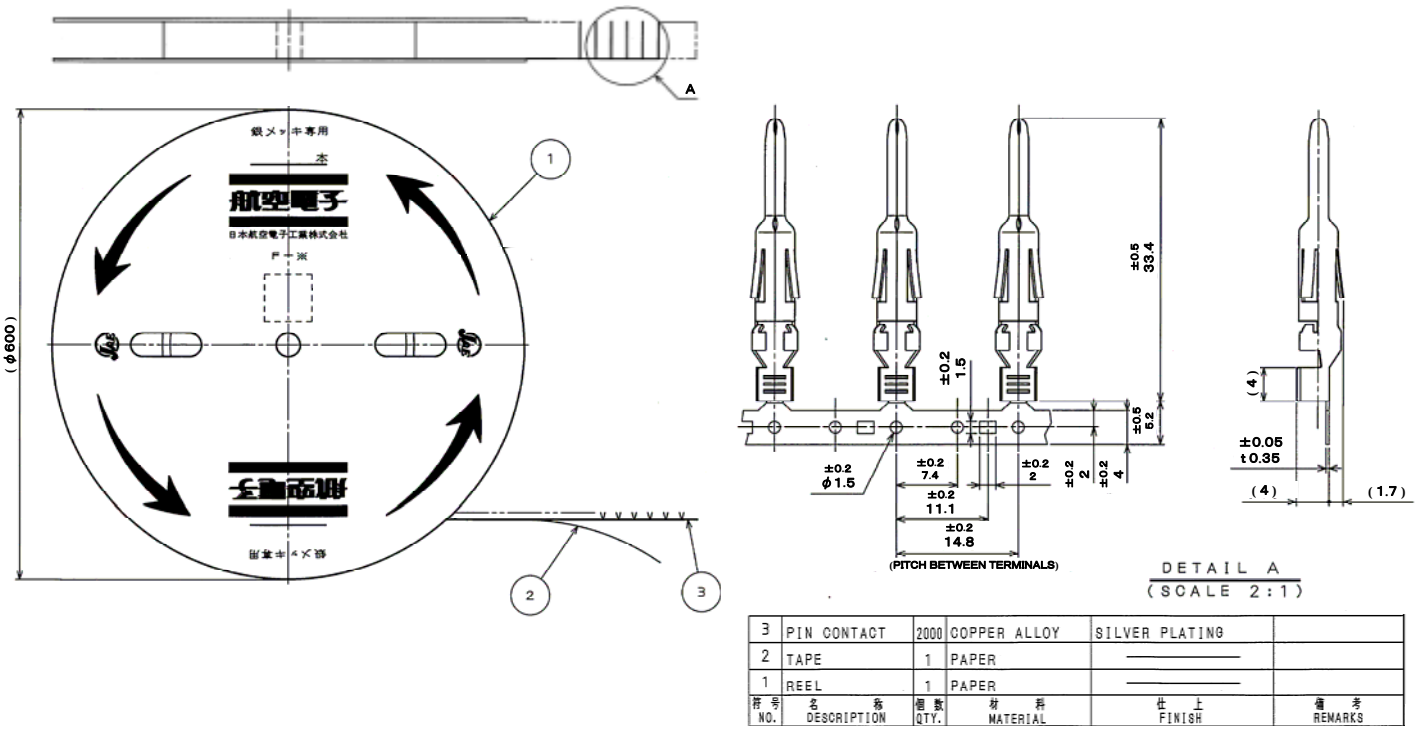

NO.	DESCRIPTION	QTY.	MATERIAL	FINISH	REMARKS
3	PIN CONTACT	2000	COPPER ALLOY	SILVER PLATING	
2	TAPE	1	PAPER	———	
1	REEL	1	PAPER	———	

JAE PMK Div. Proprietary. Copyright © 2010, Japan Aviation Electronics Industry, Ltd.

Ordering Information

Socket Contact

Part Number	Drawing No.	Conductor Size	Quantity
KB1-12-SC-1500	SJ108970	3.5 to 4.0 mm^2	1,500 pcs/reel

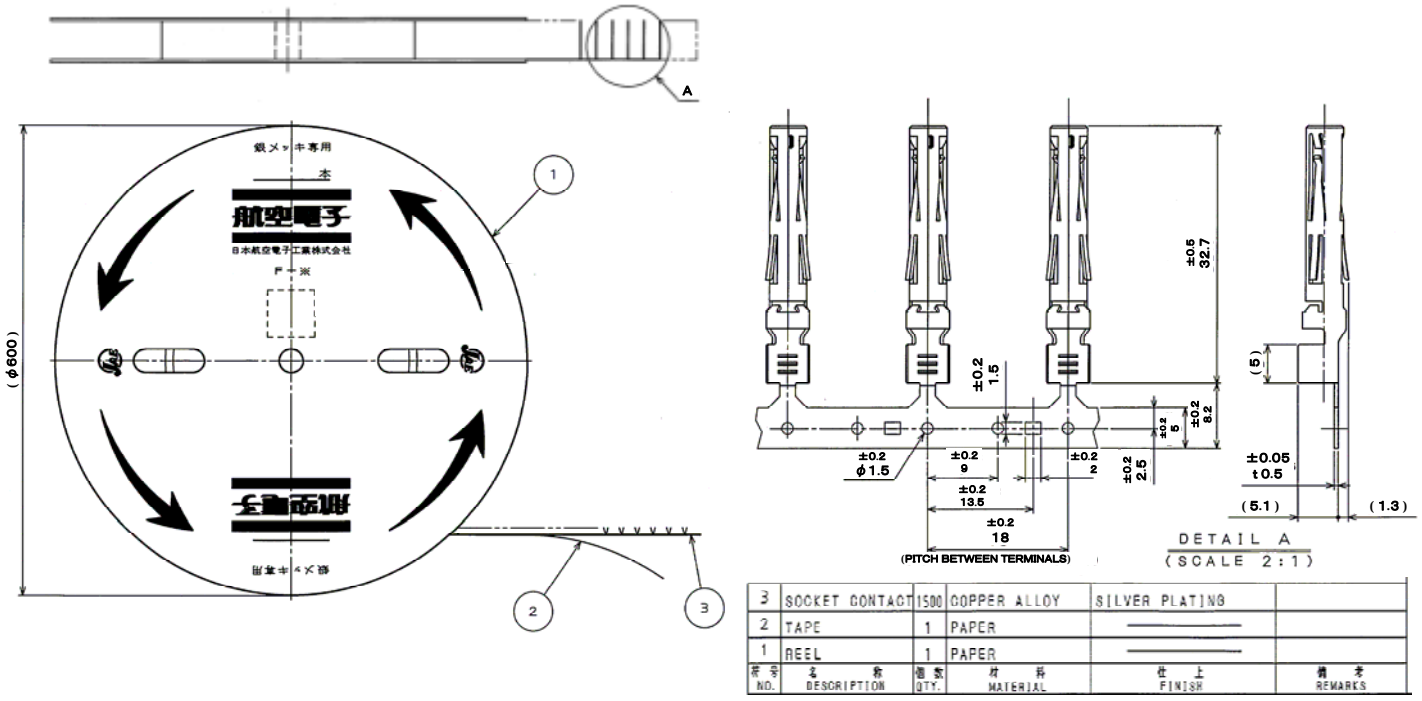

NO.	DESCRIPTION	QTY.	MATERIAL	FINISH	REMARKS
3	SOCKET CONTACT	1500	COPPER ALLOY	SILVER PLATING	
2	TAPE	1	PAPER	———	
1	REEL	1	PAPER	———	

Part Number	Drawing No.	Conductor Size	Quantity
KB1-12-SC2-2000	SJ110314	2.0 to 2.5 mm^2	2,000pcs/reel

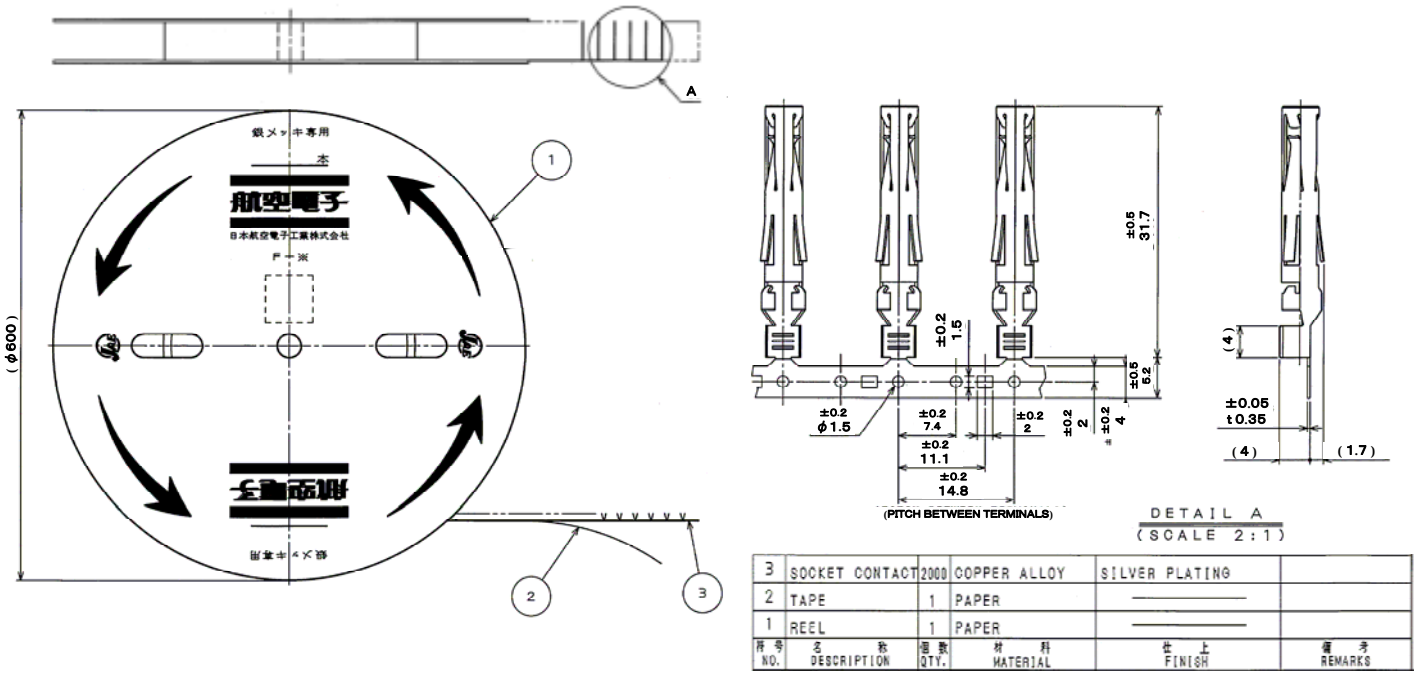

NO.	DESCRIPTION	QTY.	MATERIAL	FINISH	REMARKS
3	SOCKET CONTACT	2000	COPPER ALLOY	SILVER PLATING	
2	TAPE	1	PAPER	———	
1	REEL	1	PAPER	———	

JAE PMK Div. Proprietary. Copyright © 2010, Japan Aviation Electronics Industry, Ltd.

Crimping Tool

Conductor Size	Hand Tool	Press	Semi Automatic Applicator
3.5mm^2 dia.	CT170-11-KB1-35	CP240-1	350 - KB1 - 10
2.0mm^2 dia.	CT170-11-KB1-25		350 - KB1B - 10

Technical Bulletin

Specification	JACS-50028
Instruction Manual	JAHL-50028

Notice: Products shown in this brochure are made for the applications listed below. However, if the above-mentioned products are to be used in aerospace devices, marine cable-connection devices, atomic power control systems, medical equipment for life-support systems, or any other specific application requiring extremely high reliability, please contact JAE for further information.
Recommended applications: Computers, Office machines, Measuring devices, Telecommunication devices (Terminals, Mobile devices), AV devices, Household applications, FA devices, etc.

Japan Aviation Electronics Industry, Ltd.

Product Marketing Division
Aobadai Building, 3-1-19, Aobadai, Meguro-ku, Tokyo 153-8539
Phone: +81-3-3780-2787 FAX: +81-3-3780-2946

* The specifications in this brochure are subject to change without notice. Please contact JAE for information.

JAE PMK Div. Proprietary. Copyright © 2010, Japan Aviation Electronics Industry, Ltd.