KAW Series ( 30 W WIDE INPUT RANGE DC-DC CONVERTER )

# FEATURES

- SIX-SIDE SHIELDED CASE
- 9-18V,18-36V,36-72V WIDE INPUT RANGE
- SHORT CIRCUIT PROTECTION
- REMOTE ON/OFF AND TRIM
- NO EXTERNAL COMPONENTS REQUIRED
- TYPICAL EFFICIENCY 80%
- 100% BURNED IN
- INDUSTRY STANDARD PACKAGE
- MTBF > 700,000 HOURS




## OUTPUT SPECIFICATIONS

| | |
|---|---|
| Voltage Setpoint Accuracy | +/-2% max |
| Temperature Coefficient | +/-0.03%/ °C |
| Ripple & Noise (20MHz BW) | 100mVp-p max |
| Line Regulation[1] | +/-0.2% max |
| Load Regulation[2] | +/-0.2% max |
| Short Circuit Protection | Continuous |
| OverVoltage Protection | Built-in |
| External Trim Adj. Range | +/-10% |

## ENVIRONMENTAL SPECIFICATIONS

| | |
|---|---|
| Operating Temperature | -25 °C to +71 °C |
| Storage Temperature | -55 °C to +100 °C |
| Cooling | Free-Air Convection |

*ALL SPECIFICATIONS TYPICAL AT NOMINAL LINE, FULL LOAD , AND 25 °C UNLESS OTHERWISE NOTED.*

## INPUT SPECIFICATIONS

| | |
|---|---|
| Input Voltage Range | 2:1 INPUT RANGE |
| Input Filter | Pi Network |

## GENERAL SPECIFICATIONS

| | |
|---|---|
| Efficiency | 75% min |
| Transient Response(Full to 1/2 Load) | <500uSec |
| Isolation Voltage[3] | 1000 VDC min |
| Isolation Resistance | $10^9$ ohms min |
| Switching Frequency | 100 KHz min |
| MTBF | 700,000 Hours |
| Weight | 110g Typ |
| Case Material | Six-Side Shielded Case |
| Case Size | 50.8mm*50.8mm*21mm |

[1] *High Line to Low Line.*

[2] *Load Regulation is for output load current change from 10% to 100%.*

[3] *For 10 seconds*

## SELECTION GUIDE
## 2:1 30W OUTPUT

| MODEL NUMBER | INPUT VOLTAGE (VDC) | OUTPUT VOLTAGE (VDC) | OUTPUT CURRENT (mA) | INPUT[4] CURRENT(mA) | | EFF (%)[5] | ISOLATION (VDC) |
|---|---|---|---|---|---|---|---|
| | | | | FULL LOAD | NO LOAD | | |
| KAWS-1205 | 9-18 | 5 | 5000 | 2637 | 40 | 79 | 1000 |
| KAWS-1212 | 9-18 | 12 | 2500 | 3086 | 40 | 81 | 1000 |
| KAWS-1215 | 9-18 | 15 | 2000 | 3096 | 38 | 81 | 1000 |
| KAWD-1205 | 9-18 | +/-5 | +/-2500 | 2637 | 40 | 79 | 1000 |
| KAWD-1212 | 9-18 | +/-12 | +/-1250 | 3125 | 40 | 80 | 1000 |
| KAWD-1215 | 9-18 | +/-15 | +/-1000 | 3125 | 38 | 80 | 1000 |
| KAWS-2405 | 18-36 | 5 | 5000 | 1302 | 20 | 80 | 1000 |
| KAWS-2412 | 18-36 | 12 | 2500 | 1470 | 18 | 85 | 1000 |
| KAWS-2415 | 18-36 | 15 | 2000 | 1470 | 18 | 85 | 1000 |
| KAWD-2405 | 18-36 | +/-5 | +/-2500 | 1302 | 20 | 80 | 1000 |
| KAWD-2412 | 18-36 | +/-12 | +/-1250 | 1470 | 18 | 85 | 1000 |
| KAWD-2415 | 18-36 | +/-15 | +/-1000 | 1470 | 18 | 85 | 1000 |
| KAWS-4805 | 36-72 | 5 | 5000 | 651 | 10 | 80 | 1000 |
| KAWS-4812 | 36-72 | 12 | 2500 | 762 | 9 | 82 | 1000 |
| KAWS-4815 | 36-72 | 15 | 2000 | 762 | 9 | 82 | 1000 |
| KAWD-4805 | 36-72 | +/-5 | +/-2500 | 651 | 10 | 80 | 1000 |
| KAWD-4812 | 36-72 | +/-12 | +/-1250 | 762 | 9 | 82 | 1000 |
| KAWD-4815 | 36-72 | +/-15 | +/-1000 | 762 | 9 | 82 | 1000 |

*Note: Other input to output voltages may be available. Please contact factory.*

[4] *NOMINAL INPUT VOLTAGE.*

[5] *NOMINAL INPUT VOLTAGE,FULL LOAD.*

## SIMPLIFIED SCHEMATIC

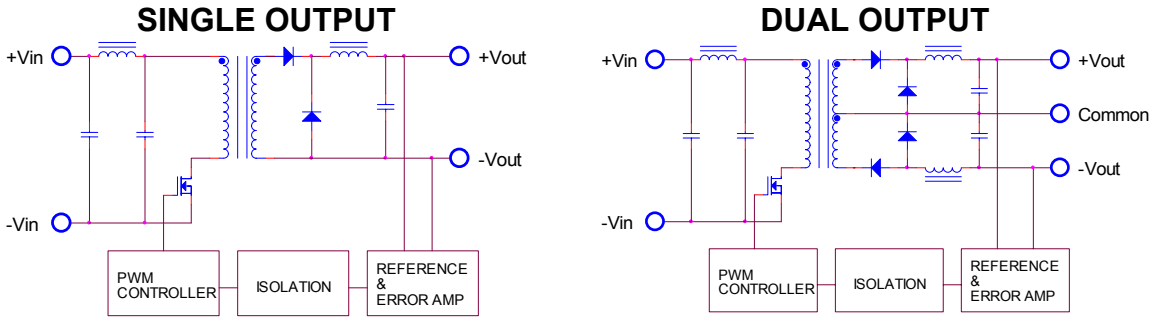


## MECHANICAL DIMENSIONS

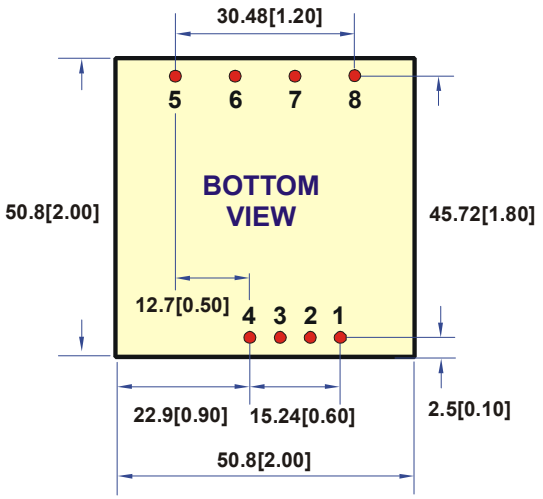


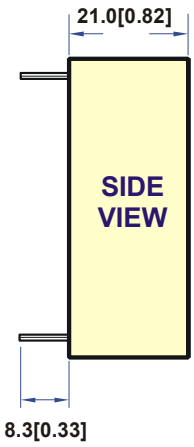


| PIN | SINGLE | DUAL |
|---|---|---|
| 1 | Remote On/Off | |
| 2 | NO PIN | NO PIN |
| 3 | -Vin | -Vin |
| 4 | +Vin | +Vin |
| 5 | NO PIN | +Vout |
| 6 | +Vout | Common |
| 7 | -Vout | -Vout |
| 8 | TRIM | TRIM |

All dimensions are in millimeters[inches]

| Remote On/Off Control | | | |
|---|---|---|---|
| Control Input | PIN1 | Control Common | PIN3 |
| Control Voltage | | Converter Shutdown Idle Current | 10mA |
| ON | >+2.5VDC or Open Circuit | Logic Compatibility | CMOS or Open Collector TTL |
| OFF | <+0.8VDC or Jumper to PIN3 | | |

## RECOMMENDED FOOTPRINT DETAILS

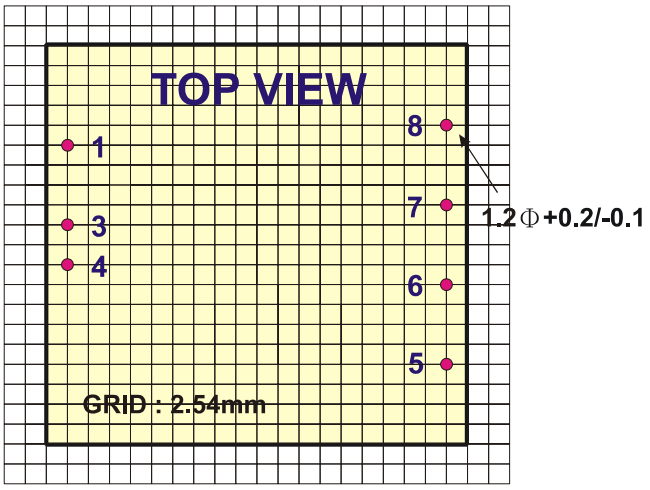


## TYPICAL APPLICATIONS

### SINGLE OUTPUT

### DUAL OUTPUT

### FIXED VOLTAGE OUTPUT

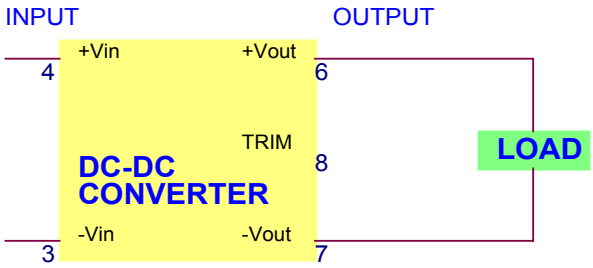


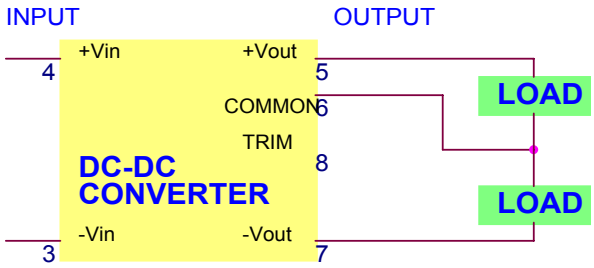


### TRIM CONNECTIONS USING A TRIMPOT

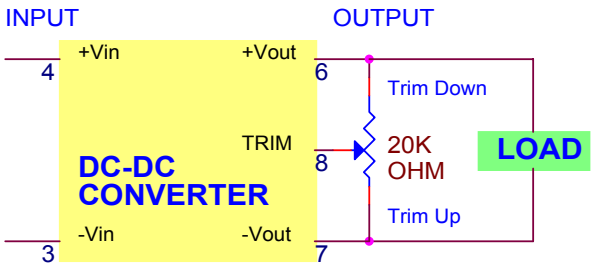


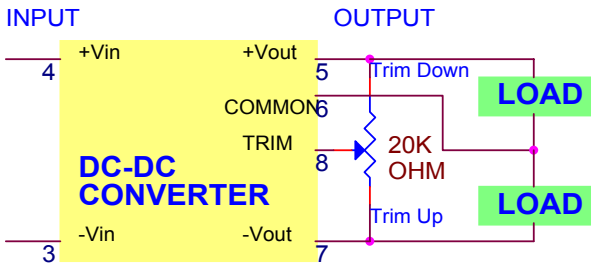

### FIXED-VALUE TRIM DOWN RESISTOR

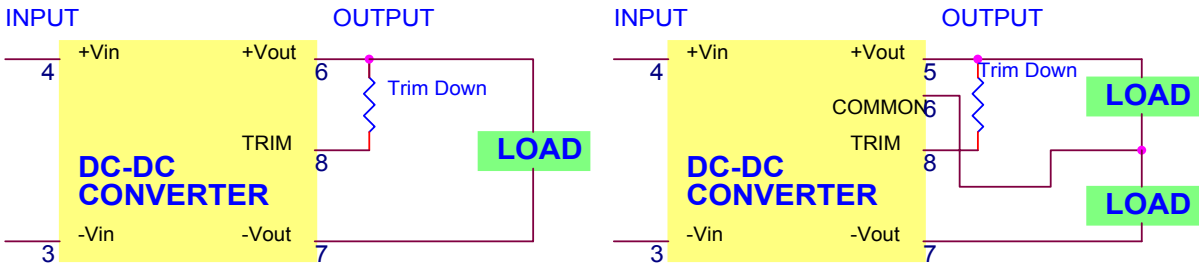


### FIXED-VALUE TRIM UP RESISTOR

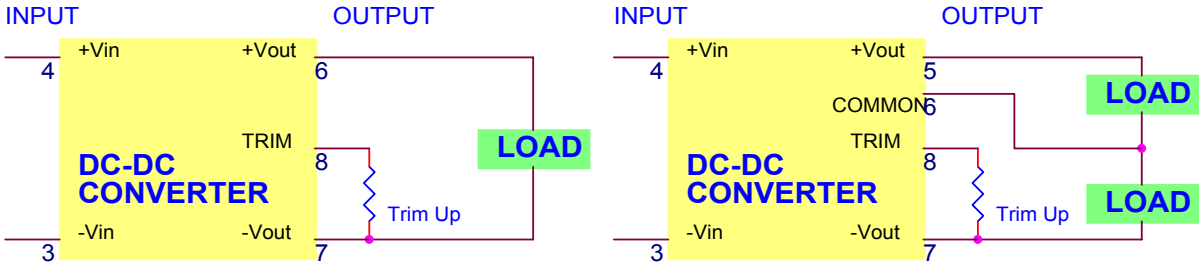


## • TEMPERATURE DERATING

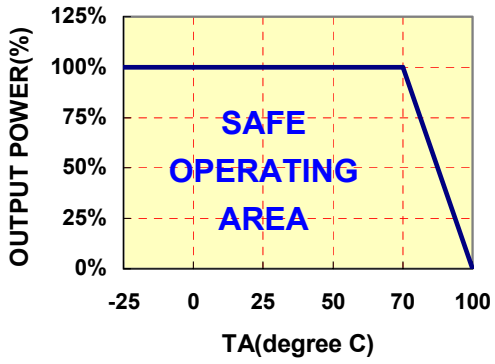

# KAW SERIES APPLICATION NOTES:

## EXTERNAL CAPACITANCE REQUIREMENTS:

*No external capacitance is required for operation of the KAW series.*

*To meet the reflected ripple requirements of the converter, an input impedance of less than 0.5 ohm from DC to 220KHz is required.*

*External output capacitance is not required for operation, however it is recommended that 10uF tantalum and 0.1uF ceramic capacitance be selected for reduced system noise.*

*Additional output capacitance may be added for increased filtering, but should not exceed 2200uF.*

## Negative Outputs:

*A negative output voltage may be obtained by connecting the +OUT to circuit ground and connecting –OUT as the negative output.*

**FOR MORE INFORMATION CALL:**

***Power Systems – The Power Solution***

**Ilsfeld-Auenstein ( Germany ) Dörnet 8 Tel: + 49 / 70 62 / 67 59 – 6 Fax: + 49 / 70 62 / 67 59 -80**

**E-mail: Info@Power-Systems.de Home Page: www.Power-Systems.de**