

Is Now Part of



ON Semiconductor®

To learn more about ON Semiconductor, please visit our website at
www.onsemi.com

Please note: As part of the Fairchild Semiconductor integration, some of the Fairchild orderable part numbers will need to change in order to meet ON Semiconductor's system requirements. Since the ON Semiconductor product management systems do not have the ability to manage part nomenclature that utilizes an underscore (_), the underscore (_) in the Fairchild part numbers will be changed to a dash (-). This document may contain device numbers with an underscore (_). Please check the ON Semiconductor website to verify the updated device numbers. The most current and up-to-date ordering information can be found at www.onsemi.com. Please email any questions regarding the system integration to Fairchild_questions@onsemi.com.

ON Semiconductor and the ON Semiconductor logo are trademarks of Semiconductor Components Industries, LLC dba ON Semiconductor or its subsidiaries in the United States and/or other countries. ON Semiconductor owns the rights to a number of patents, trademarks, copyrights, trade secrets, and other intellectual property. A listing of ON Semiconductor's product/patent coverage may be accessed at www.onsemi.com/site/pdf/Patent-Marking.pdf. ON Semiconductor reserves the right to make changes without further notice to any products herein. ON Semiconductor makes no warranty, representation or guarantee regarding the suitability of its products for any particular purpose, nor does ON Semiconductor assume any liability arising out of the application or use of any product or circuit, and specifically disclaims any and all liability, including without limitation special, consequential or incidental damages. Buyer is responsible for its products and applications using ON Semiconductor products, including compliance with all laws, regulations and safety requirements or standards, regardless of any support or applications information provided by ON Semiconductor. "Typical" parameters which may be provided in ON Semiconductor data sheets and/or specifications can and do vary in different applications and actual performance may vary over time. All operating parameters, including "Typicals" must be validated for each customer application by customer's technical experts. ON Semiconductor does not convey any license under its patent rights nor the rights of others. ON Semiconductor products are not designed, intended, or authorized for use as a critical component in life support systems or any FDA Class 3 medical devices or medical devices with a same or similar classification in a foreign jurisdiction or any devices intended for implantation in the human body. Should Buyer purchase or use ON Semiconductor products for any such unintended or unauthorized application, Buyer shall indemnify and hold ON Semiconductor and its officers, employees, subsidiaries, affiliates, and distributors harmless against all claims, costs, damages, and expenses, and reasonable attorney fees arising out of, directly or indirectly, any claim of personal injury or death associated with such unintended or unauthorized use, even if such claim alleges that ON Semiconductor was negligent regarding the design or manufacture of the part. ON Semiconductor is an Equal Opportunity/Affirmative Action Employer. This literature is subject to all applicable copyright laws and is not for resale in any manner.

KA34063A

SMPS Controller

Features

- Operation From 3.0 to 40V Input
- Short Circuit Current Limiting
- Low Stand-by Current
- Output Switch Current of 1.5A Without External Transistors
- Output Voltage Adjustable
- Frequency of Operation From 100Hz to 100kHz
- Step-up, Step-Down or Inverting Switching Regulators

Description

The KA34063A is a monolithic regulator sub system intended for use as DC to DC converter. This device contains a temperature compensated bandgap reference, a duty cycle control oscillator, a driver, and a high current output switch. It can be used for step down, step up or inverting switching regulators as well as for series pass regulators.

8-DIP



8-SOP



Internal Block Diagram

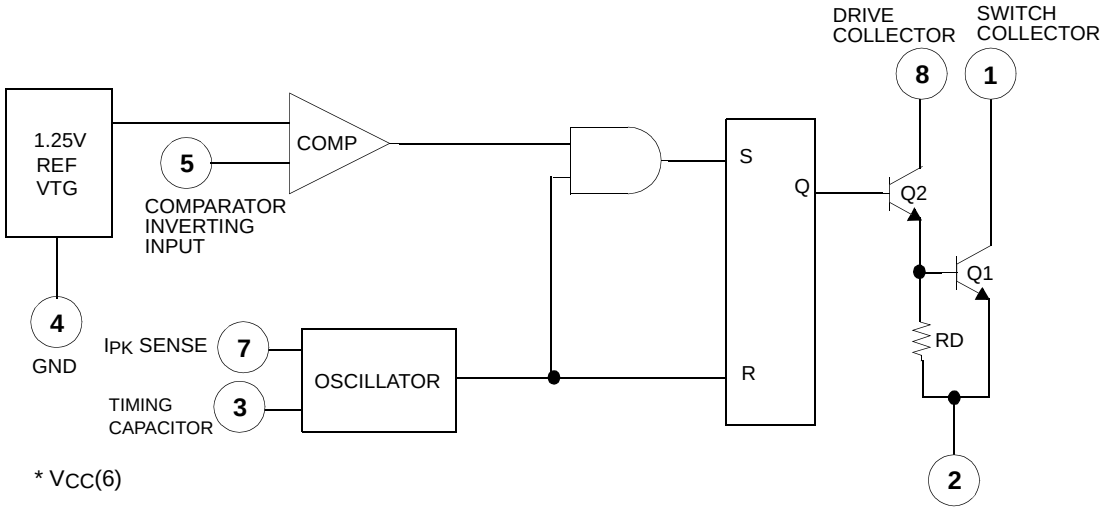

Rev. 1.0.1

©2002 Fairchild Semiconductor Corporation

Absolute Maximum Ratings

Parameter	Symbol	Value	Unit
Supply Voltage	V_{CC}	40	V
Comparator Input Voltage Range	$V_{I(COMP)}$	-0.3 ~ +40	V
Switch Collector Voltage	$V_{C(SW)}$	40	V
Switch Emitter Voltage	$V_{E(SW)}$	40	V
Switch Collector To Emitter Voltage	$V_{CE(SW)}$	40	V
Driver Collector Voltage	$V_{C(DR)}$	40	V
Switch Current	I_{SW}	1.5	A
Storage Temperature Range	T_{STG}	-65 ~ +150	°C

Electrical Characteristics

(V_{CC} = 5.0V, T_A = 0°C to +70°C , unless otherwise specified)

Parameter	Symbol	Conditions	Min.	Typ.	Max.	Unit
OSCILLATOR						
Charging Current	I_{CHG}	V_{CC} = 5 to 40V, T_A = 25°C	22	31	42	µA
Discharging Current	I_{DISCHG}	V_{CC} = 5 to 40V, T_A = 25°C	140	190	260	µA
Oscillator Amplitude	$V_{(OSC)}$	T_A = 25°C		0.5	-	V
Discharge to Charge Current Ratio	K	V_7 = V_{CC}, T_A = 25°C	5.2	6.1	7.5	-
Current Limit Sense Voltage	$V_{SENSE(C.L)}$	I_{CHG} = I_{DISCHG} T_A = 25°C	250	300	350	mV
OUTPUT SWITCH						
Saturation Voltage 1 (Note1)	$V_{CE(SAT)}1$	I_{SW} = 1.0A V_C(driver) = V_C(SW)	-	0.95	1.3	V
Saturation Voltage 2 (Note1,2)	$V_{CE(SAT)}2$	I_{SW} = 1.0A, V_C(driver) = 50mA	-	0.45	0.7	V
DC Current Gain (Note1,2)	$G_{I(DC)}$	I_{SW} = 1.0A, V_{CE} = 5.0V, T_A = 25°C	50	180	-	-
Collector off State Current (Note1)	$I_{C(OFF)}$	V_{CE} = 40V, T_A = 25°C	-	0.01	100	µA
COMPARATOR						
Threshold Voltage	V_{TH}	-	1.21	1.24	1.29	V
Threshold Voltage Line Regulation	ΔV_{TH}	V_{CC} = 3 to 40V	-	2.0	5.0	mV
Input Bias Current	I_{BIAS}	V_I = 0V	-	50	400	nA
TOTAL DEVICE						
Supply Current	I_{CC}	V_{CC} = 5 to 40V, C_T = 0.001uF V_7 = V_{CC}, V_5>V_{TH} pin2 = GND	-	2.7	4.0	mA

Note :

1. Output switch tests are performed under pulsed conditions to minimize power dissipation.
2. These parameters, although guaranteed, are not 100% tested in production.

Typical Performance Characteristics

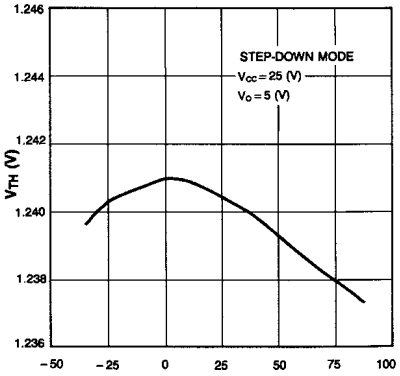

Figure 1. Temperature Drift (V_{TH})

Mechanical Dimensions

Package

Dimensions in millimeters

8-DIP

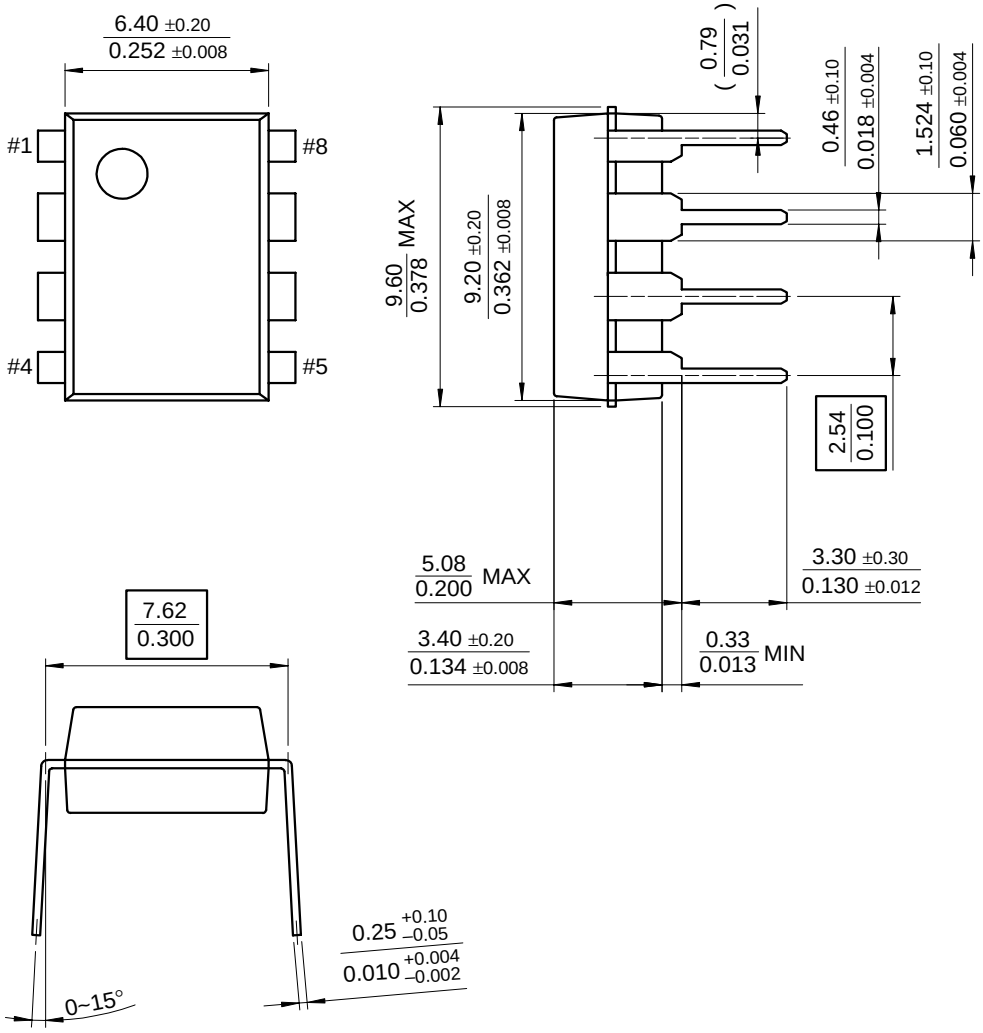

Mechanical Dimensions (Continued)

Package

Dimensions in millimeters

8-SOP

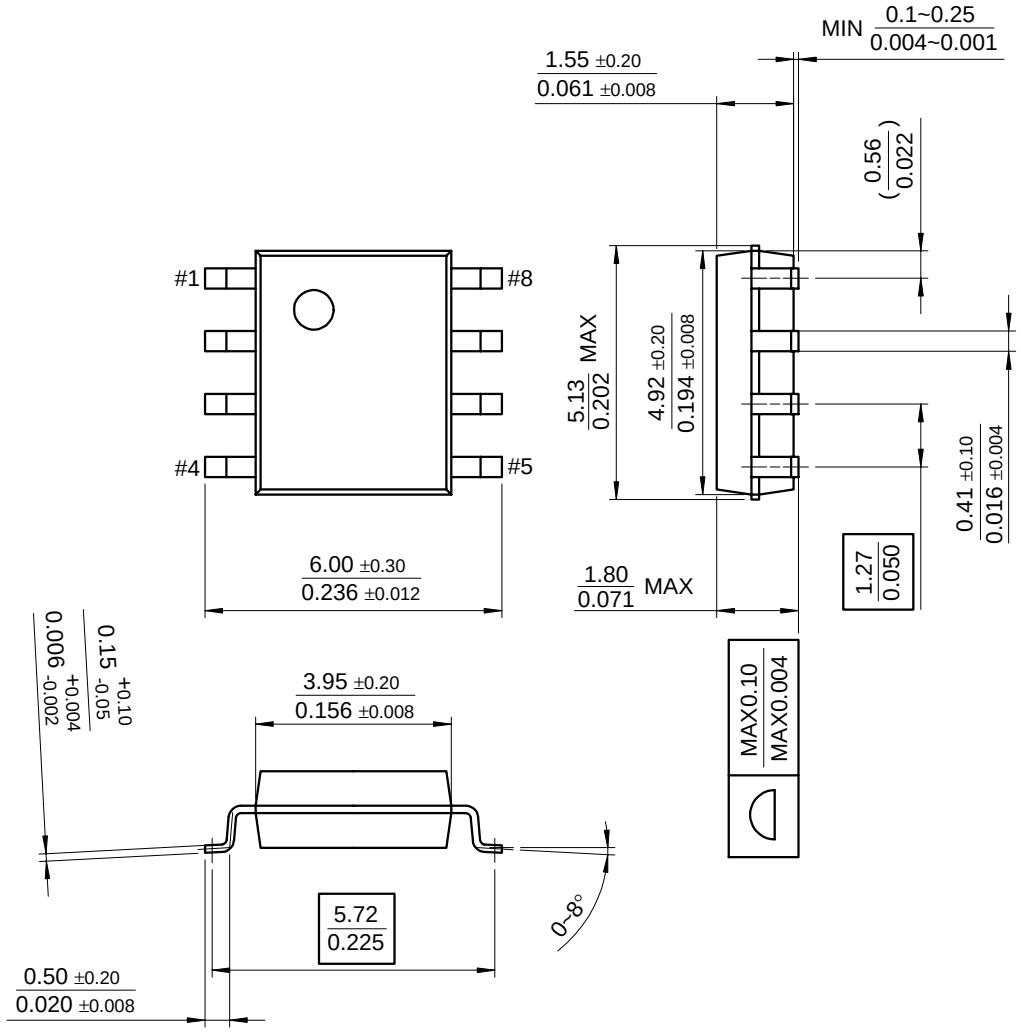

Ordering Information

Product Number	Package	Operating Temperature
KA34063A	8-DIP	0 ~ +70°C
KA34063AD	8-SOP	

DISCLAIMER

FAIRCHILD SEMICONDUCTOR RESERVES THE RIGHT TO MAKE CHANGES WITHOUT FURTHER NOTICE TO ANY PRODUCTS HEREIN TO IMPROVE RELIABILITY, FUNCTION OR DESIGN. FAIRCHILD DOES NOT ASSUME ANY LIABILITY ARISING OUT OF THE APPLICATION OR USE OF ANY PRODUCT OR CIRCUIT DESCRIBED HEREIN; NEITHER DOES IT CONVEY ANY LICENSE UNDER ITS PATENT RIGHTS, NOR THE RIGHTS OF OTHERS.

LIFE SUPPORT POLICY

FAIRCHILD'S PRODUCTS ARE NOT AUTHORIZED FOR USE AS CRITICAL COMPONENTS IN LIFE SUPPORT DEVICES OR SYSTEMS WITHOUT THE EXPRESS WRITTEN APPROVAL OF THE PRESIDENT OF FAIRCHILD SEMICONDUCTOR CORPORATION. As used herein:

1. Life support devices or systems are devices or systems which, (a) are intended for surgical implant into the body, or (b) support or sustain life, and (c) whose failure to perform when properly used in accordance with instructions for use provided in the labeling, can be reasonably expected to result in a significant injury of the user.
2. A critical component in any component of a life support device or system whose failure to perform can be reasonably expected to cause the failure of the life support device or system, or to affect its safety or effectiveness.

© 2002 Fairchild Semiconductor Corporation

ON Semiconductor and ON are trademarks of Semiconductor Components Industries, LLC dba ON Semiconductor or its subsidiaries in the United States and/or other countries. ON Semiconductor owns the rights to a number of patents, trademarks, copyrights, trade secrets, and other intellectual property. A listing of ON Semiconductor's product/patent coverage may be accessed at www.onsemi.com/site/pdf/Patent−Marking.pdf. ON Semiconductor reserves the right to make changes without further notice to any products herein. ON Semiconductor makes no warranty, representation or guarantee regarding the suitability of its products for any particular purpose, nor does ON Semiconductor assume any liability arising out of the application or use of any product or circuit, and specifically disclaims any and all liability, including without limitation special, consequential or incidental damages. Buyer is responsible for its products and applications using ON Semiconductor products, including compliance with all laws, regulations and safety requirements or standards, regardless of any support or applications information provided by ON Semiconductor. "Typical" parameters which may be provided in ON Semiconductor data sheets and/or specifications can and do vary in different applications and actual performance may vary over time. All operating parameters, including "Typicals" must be validated for each customer application by customer's technical experts. ON Semiconductor does not convey any license under its patent rights nor the rights of others. ON Semiconductor products are not designed, intended, or authorized for use as a critical component in life support systems or any FDA Class 3 medical devices or medical devices with a same or similar classification in a foreign jurisdiction or any devices intended for implantation in the human body. Should Buyer purchase or use ON Semiconductor products for any such unintended or unauthorized application, Buyer shall indemnify and hold ON Semiconductor and its officers, employees, subsidiaries, affiliates, and distributors harmless against all claims, costs, damages, and expenses, and reasonable attorney fees arising out of, directly or indirectly, any claim of personal injury or death associated with such unintended or unauthorized use, even if such claim alleges that ON Semiconductor was negligent regarding the design or manufacture of the part. ON Semiconductor is an Equal Opportunity/Affirmative Action Employer. This literature is subject to all applicable copyright laws and is not for resale in any manner.

PUBLICATION ORDERING INFORMATION

LITERATURE FULFILLMENT:
Literature Distribution Center for ON Semiconductor
19521 E. 32nd Pkwy, Aurora, Colorado 80011 USA
Phone: 303−675−2175 or 800−344−3860 Toll Free USA/Canada
Fax: 303−675−2176 or 800−344−3867 Toll Free USA/Canada
Email: orderlit@onsemi.com

N. American Technical Support: 800−282−9855 Toll Free USA/Canada
Europe, Middle East and Africa Technical Support:
Phone: 421 33 790 2910
Japan Customer Focus Center
Phone: 81−3−5817−1050

ON Semiconductor Website: **www.onsemi.com**

Order Literature: http://www.onsemi.com/orderlit

For additional information, please contact your local Sales Representative