

Is Now Part of



ON Semiconductor®

To learn more about ON Semiconductor, please visit our website at
www.onsemi.com

Please note: As part of the Fairchild Semiconductor integration, some of the Fairchild orderable part numbers will need to change in order to meet ON Semiconductor's system requirements. Since the ON Semiconductor product management systems do not have the ability to manage part nomenclature that utilizes an underscore (_), the underscore (_) in the Fairchild part numbers will be changed to a dash (-). This document may contain device numbers with an underscore (_). Please check the ON Semiconductor website to verify the updated device numbers. The most current and up-to-date ordering information can be found at www.onsemi.com. Please email any questions regarding the system integration to Fairchild_questions@onsemi.com.

ON Semiconductor and the ON Semiconductor logo are trademarks of Semiconductor Components Industries, LLC dba ON Semiconductor or its subsidiaries in the United States and/or other countries. ON Semiconductor owns the rights to a number of patents, trademarks, copyrights, trade secrets, and other intellectual property. A listing of ON Semiconductor's product/patent coverage may be accessed at www.onsemi.com/site/pdf/Patent-Marking.pdf. ON Semiconductor reserves the right to make changes without further notice to any products herein. ON Semiconductor makes no warranty, representation or guarantee regarding the suitability of its products for any particular purpose, nor does ON Semiconductor assume any liability arising out of the application or use of any product or circuit, and specifically disclaims any and all liability, including without limitation special, consequential or incidental damages. Buyer is responsible for its products and applications using ON Semiconductor products, including compliance with all laws, regulations and safety requirements or standards, regardless of any support or applications information provided by ON Semiconductor. "Typical" parameters which may be provided in ON Semiconductor data sheets and/or specifications can and do vary in different applications and actual performance may vary over time. All operating parameters, including "Typicals" must be validated for each customer application by customer's technical experts. ON Semiconductor does not convey any license under its patent rights nor the rights of others. ON Semiconductor products are not designed, intended, or authorized for use as a critical component in life support systems or any FDA Class 3 medical devices or medical devices with a same or similar classification in a foreign jurisdiction or any devices intended for implantation in the human body. Should Buyer purchase or use ON Semiconductor products for any such unintended or unauthorized application, Buyer shall indemnify and hold ON Semiconductor and its officers, employees, subsidiaries, affiliates, and distributors harmless against all claims, costs, damages, and expenses, and reasonable attorney fees arising out of, directly or indirectly, any claim of personal injury or death associated with such unintended or unauthorized use, even if such claim alleges that ON Semiconductor was negligent regarding the design or manufacture of the part. ON Semiconductor is an Equal Opportunity/Affirmative Action Employer. This literature is subject to all applicable copyright laws and is not for resale in any manner.

KA317M

3-Terminal 0.5A Positive Adjustable Regulator

Features

- Output Current in Excess of 0.5A
- Output Adjustable Between 1.2V and 37V
- Internal Thermal Overload Protection
- Internal Short Circuit Current Limiting
- Output Transistor Safe Area Compensation
- Floating Operation for High Voltage Applications

Description

The KA317M is a 3-Terminal adjustable positive voltage regulator capable of supplying in excess of 500mA over an output voltage range of 1.2V to 37V. This voltage regulator is exceptionally easy to use and requires only two external resistors to set the output voltage.

D-PAK



1. Adj 2. Output 3. Input

TO-220



Internal Block Diagram

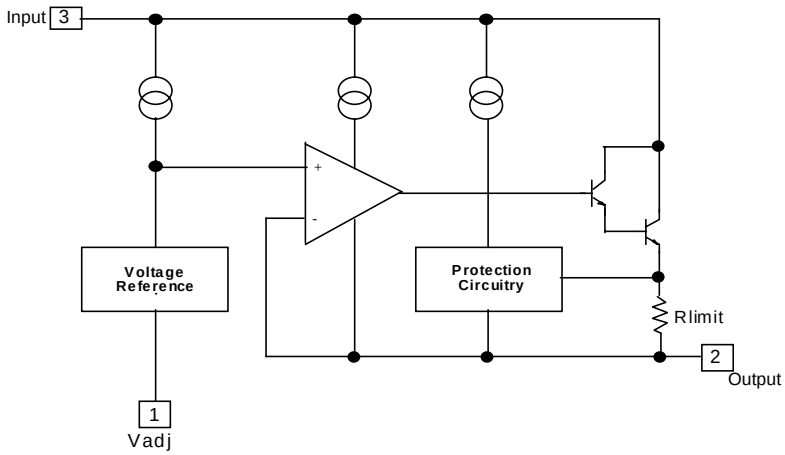

Rev. 1.0.2

©2002 Fairchild Semiconductor Corporation

Absolute Maximum Ratings

Parameter	Symbol	Value	Unit
Input Output Voltage Differential	V_I - V_O	40	V
Power Dissipation	P_D	Internally limited	W
Thermal Resistance Junction-Air D-PAK (Note1,2)	$R_{\theta JA}$	100	°C/W
Operating Junction Temperature Range	T_j	0 ~ +125	°C
Storage Temperature Range	T_{STG}	-65 ~+125	°C

Electrical Characteristics

(V_I-V_O=5V, I_O= 0.1A, 0°C ≤ T_J ≤ + 125°C, P_{DMAX} = 7.5W, unless otherwise specified)

Parameter	Symbol	Conditions	Min.	Typ.	Max.	Unit
Line Regulation (Note3)	Rline	T_A = +25°C, 3V ≤ V_I –V_O ≤ 40V	-	0.01	0.04	%/ V
		3V ≤ V_I –V_O ≤ 40V	-	0.02	0.07	
Load Regulation (Note3)	Rload	T_A =+ 25°C, 10mA ≤ I_O ≤ 0.5A V_O ≤ 5V V_O ≥ 5V	-	5 0.1	25 0.5	mV %/ V_O
		10mA ≤ I_O ≤ 0.5A V_O ≤ 5V V_O ≥ 5V	-	20 0.3	70 1.5	mV %/ V_O
Adjustment Pin Current	I_{ADJ}	-	-	50	100	uA
Adjustment Pin Current Change	ΔI_{ADJ}	3V ≤ V_I - V_O ≤ 40V 10mA ≤ I_O ≤ 0.5A, P_D < P_{DMAX}	-	0.2	5	uA
Reference Voltage	V_{REF}	3V < V_I - V_O < 40V 10mA ≤ I_O ≤ 0.5A, P_D < P_{DMAX}	1.20	1.25	1.30	V
Temperature Stability	ST_T	-	-	0.7	-	%/ V_O
Minimum Load Current to Maintain Regulation	$I_{L(MIN)}$	V_I - V_O = 40V	-	3.5	10	mA
Maximum Output Current	$I_{O(MAX)}$	V_I - V_O ≤15V, P_D < P_{DMAX}	0.5	0.9	-	A
		V_I - V_O = 40V P_D < P_{DMAX}, T_A =+ 25°C	0.15	0.25	-	
RMS Noise, % of V_{OUT}	e_N	T_A = +25°C, 10Hz < f < 10KHz	-	0.003	-	%/ V_O
Ripple Rejection	RR	V_O = 10V, f = 120Hz without C_{ADJ} C_{ADJ} = 10uF (Note4)	 66	65 80	-	dB
Long-Term Stability	ST	T_J =+ 125°C, 1000Hours	-	0.3	1	%/1000Hrs

Note :

1. Thermal resistance test board
   Size: 76.2mm * 114.3mm * 1.6mm(1S0P)
   JEDEC standard: JESD51-3, JESD51-7
2. Assume no ambient airflow.
3. Load and Line regulation are specified at constant junction temperature. Change in V_O due to heating effects must be taken into account separately. Pulse testing with low duty cycle is used.
4. C_{ADJ}, when used, is connected between the adjustment pin and ground.

Typical Performance Characteristics

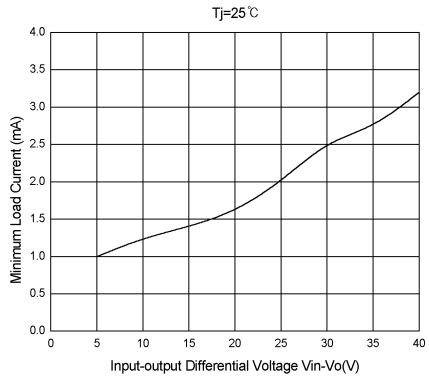

Figure 1. Minimum Load Current

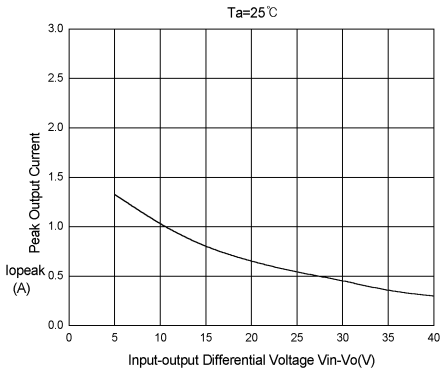

Figure 2. Peak Output Current vs. Input-Output Differential Voltage

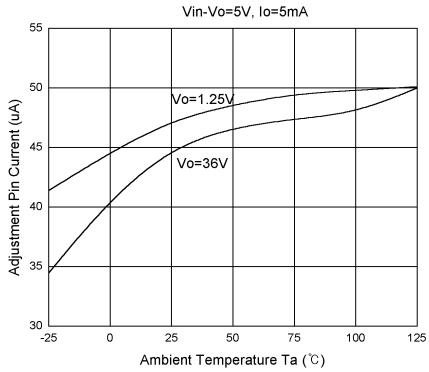

Figure 3. Adjustment Pin Current vs. Temperature

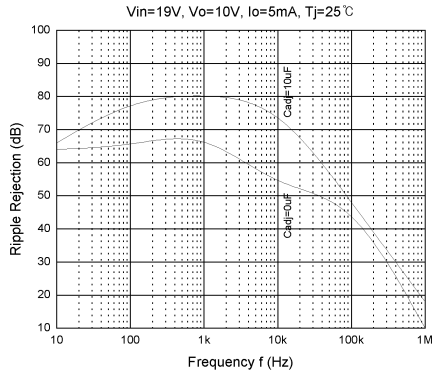

Figure 4. Ripple Rejection vs. Frequency

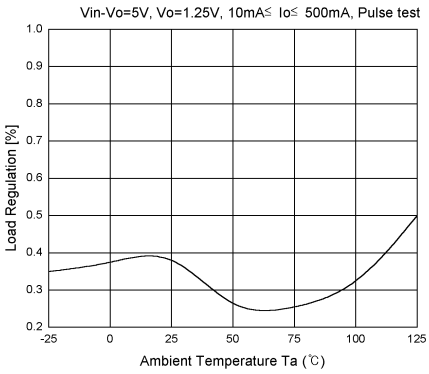

Figure 5. Load Regulation vs. Temperature

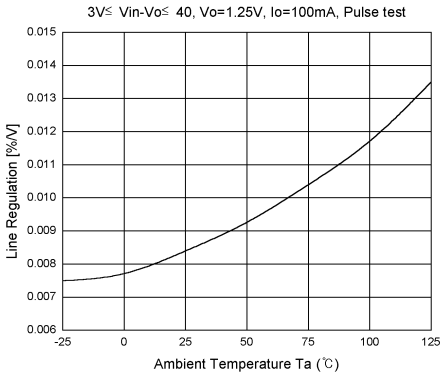

Figure 6. Line Regulation vs. Temperature

Typical Performance Characteristics (Continued)

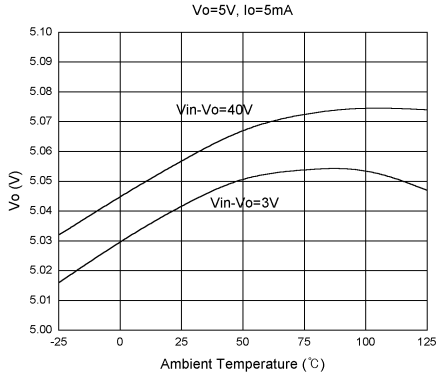

Figure 7. Outputvoltage vs. Temperature

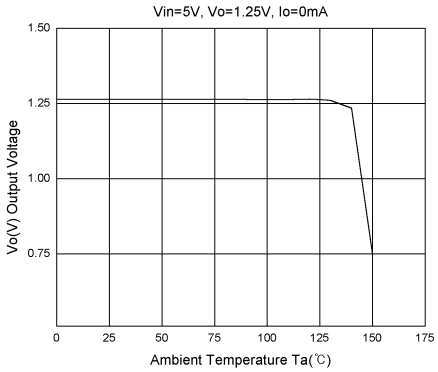

Figure 8. Thermal Shutdown

Typical Application

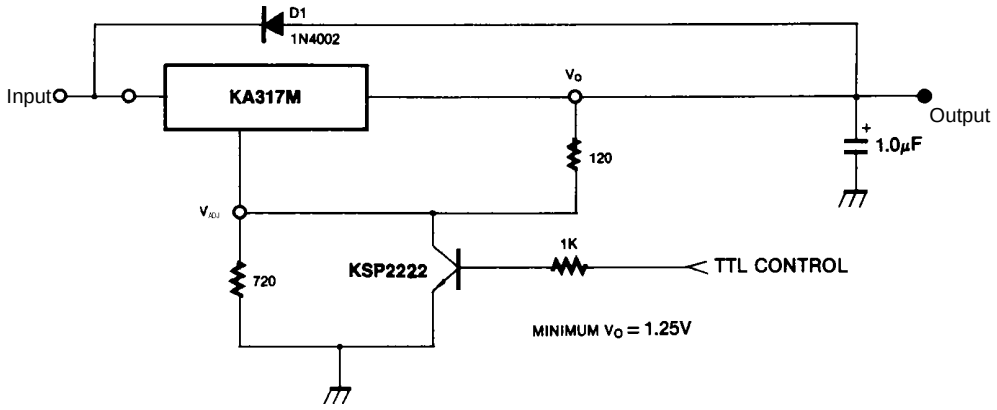

Figure 1. 15V Electronic Shutdown Regulator

D1 protects the device during an input short circuit.

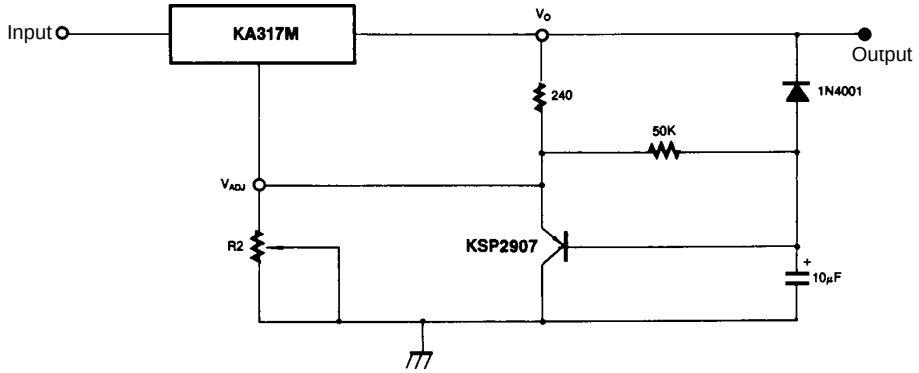

Figure 2. Slow Turn-On Regulator

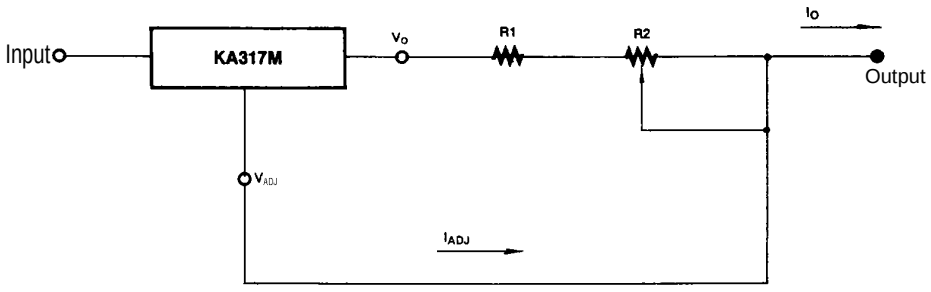

$$I_{OMAX} = \left(\frac{V_{REF}}{R1}\right) + I_{ADJ} \cong \frac{1.25V}{R1}$$

$$I_{OMIN} = \left(\frac{V_{REF}}{R1 + R2}\right) + I_{ADJ} \cong \frac{1.25V}{R1 + R2}$$

$5mA < I_O < 500mA$

Figure 3. Current Regulator

Mechanical Dimensions

Package

Dimensions in millimeters

TO-220

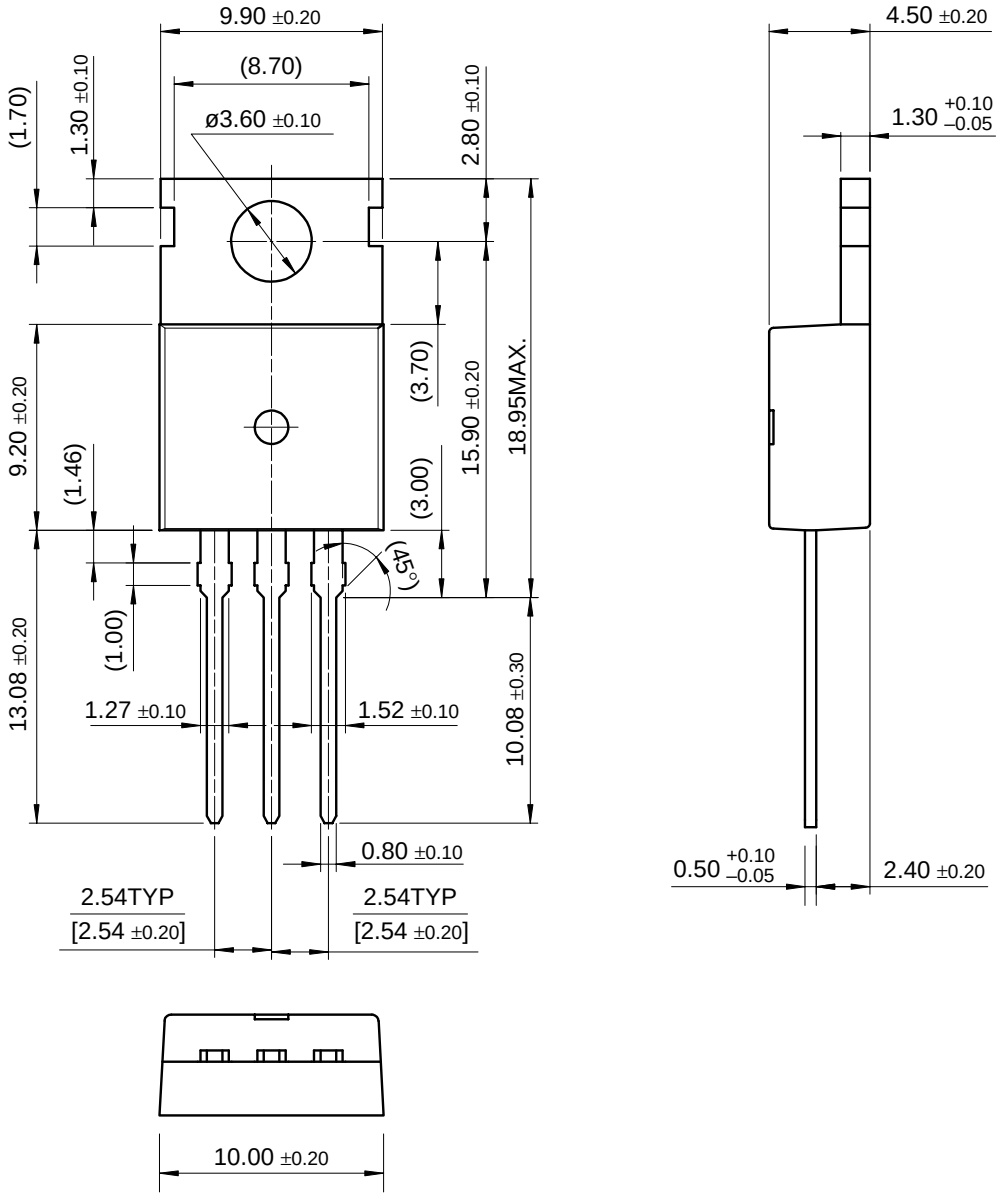

Mechanical Dimensions (Continued)

Package

Dimensions in millimeters

D-PAK

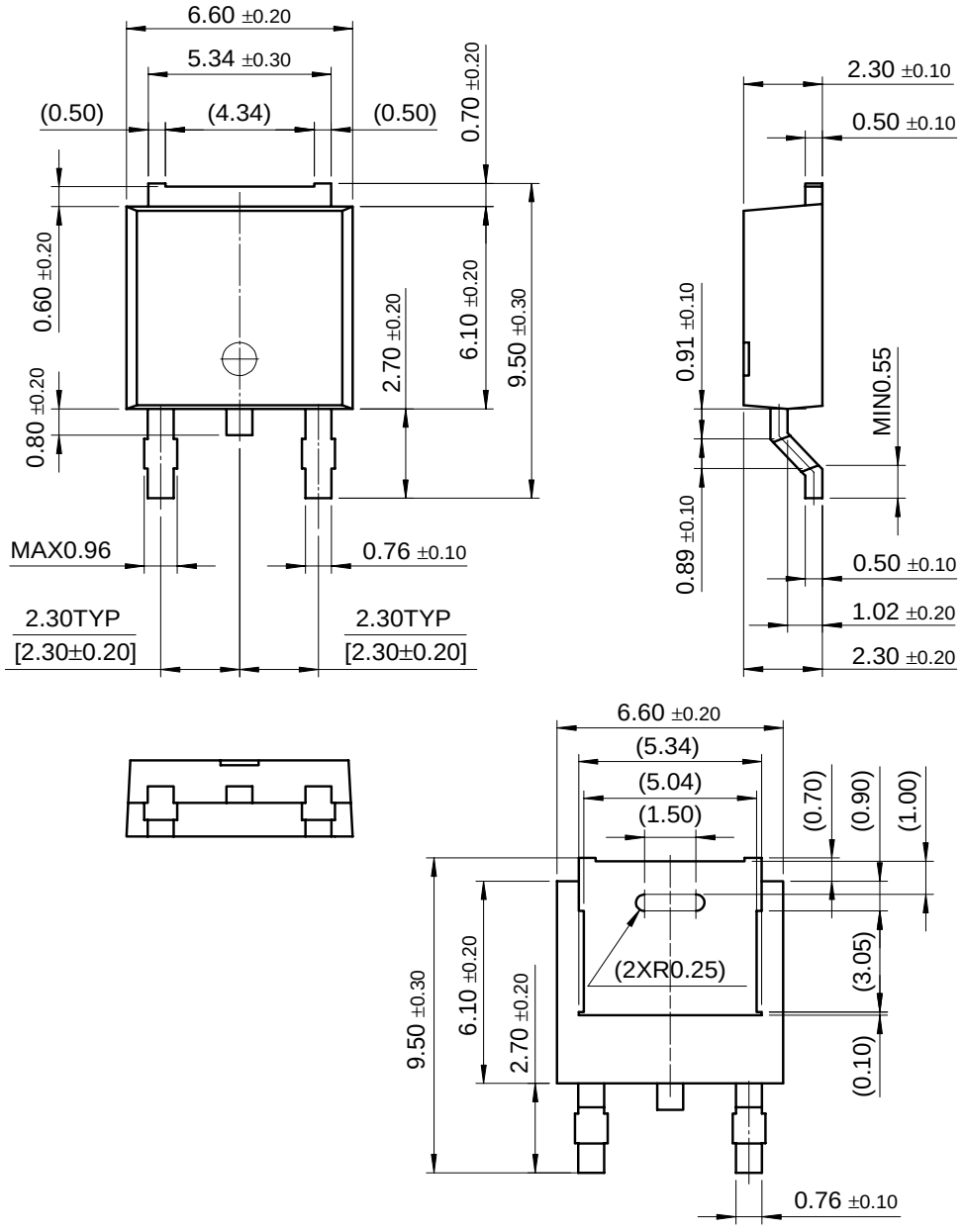

Ordering Information

Product Number	Package	Operating Temperature
KA317M	TO-220	0 ~ 125 °C
KA317MR	D-PAK	

DISCLAIMER

FAIRCHILD SEMICONDUCTOR RESERVES THE RIGHT TO MAKE CHANGES WITHOUT FURTHER NOTICE TO ANY PRODUCTS HEREIN TO IMPROVE RELIABILITY, FUNCTION OR DESIGN. FAIRCHILD DOES NOT ASSUME ANY LIABILITY ARISING OUT OF THE APPLICATION OR USE OF ANY PRODUCT OR CIRCUIT DESCRIBED HEREIN; NEITHER DOES IT CONVEY ANY LICENSE UNDER ITS PATENT RIGHTS, NOR THE RIGHTS OF OTHERS.

LIFE SUPPORT POLICY

FAIRCHILD'S PRODUCTS ARE NOT AUTHORIZED FOR USE AS CRITICAL COMPONENTS IN LIFE SUPPORT DEVICES OR SYSTEMS WITHOUT THE EXPRESS WRITTEN APPROVAL OF THE PRESIDENT OF FAIRCHILD SEMICONDUCTOR CORPORATION. As used herein:

1. Life support devices or systems are devices or systems which, (a) are intended for surgical implant into the body, or (b) support or sustain life, and (c) whose failure to perform when properly used in accordance with instructions for use provided in the labeling, can be reasonably expected to result in a significant injury of the user.
2. A critical component in any component of a life support device or system whose failure to perform can be reasonably expected to cause the failure of the life support device or system, or to affect its safety or effectiveness.

© 2002 Fairchild Semiconductor Corporation

ON Semiconductor and ON are trademarks of Semiconductor Components Industries, LLC dba ON Semiconductor or its subsidiaries in the United States and/or other countries. ON Semiconductor owns the rights to a number of patents, trademarks, copyrights, trade secrets, and other intellectual property. A listing of ON Semiconductor's product/patent coverage may be accessed at www.onsemi.com/site/pdf/Patent−Marking.pdf. ON Semiconductor reserves the right to make changes without further notice to any products herein. ON Semiconductor makes no warranty, representation or guarantee regarding the suitability of its products for any particular purpose, nor does ON Semiconductor assume any liability arising out of the application or use of any product or circuit, and specifically disclaims any and all liability, including without limitation special, consequential or incidental damages. Buyer is responsible for its products and applications using ON Semiconductor products, including compliance with all laws, regulations and safety requirements or standards, regardless of any support or applications information provided by ON Semiconductor. "Typical" parameters which may be provided in ON Semiconductor data sheets and/or specifications can and do vary in different applications and actual performance may vary over time. All operating parameters, including "Typicals" must be validated for each customer application by customer's technical experts. ON Semiconductor does not convey any license under its patent rights nor the rights of others. ON Semiconductor products are not designed, intended, or authorized for use as a critical component in life support systems or any FDA Class 3 medical devices or medical devices with a same or similar classification in a foreign jurisdiction or any devices intended for implantation in the human body. Should Buyer purchase or use ON Semiconductor products for any such unintended or unauthorized application, Buyer shall indemnify and hold ON Semiconductor and its officers, employees, subsidiaries, affiliates, and distributors harmless against all claims, costs, damages, and expenses, and reasonable attorney fees arising out of, directly or indirectly, any claim of personal injury or death associated with such unintended or unauthorized use, even if such claim alleges that ON Semiconductor was negligent regarding the design or manufacture of the part. ON Semiconductor is an Equal Opportunity/Affirmative Action Employer. This literature is subject to all applicable copyright laws and is not for resale in any manner.

PUBLICATION ORDERING INFORMATION

LITERATURE FULFILLMENT:
Literature Distribution Center for ON Semiconductor
19521 E. 32nd Pkwy, Aurora, Colorado 80011 USA
Phone: 303−675−2175 or 800−344−3860 Toll Free USA/Canada
Fax: 303−675−2176 or 800−344−3867 Toll Free USA/Canada
Email: orderlit@onsemi.com

N. American Technical Support: 800−282−9855 Toll Free USA/Canada
Europe, Middle East and Africa Technical Support:
Phone: 421 33 790 2910
Japan Customer Focus Center
Phone: 81−3−5817−1050

ON Semiconductor Website: **www.onsemi.com**

Order Literature: http://www.onsemi.com/orderlit

For additional information, please contact your local Sales Representative