5-BAND GRAPHIC EQUALIZER AMPLIFIER

The KA2223 is a monolithic integrated circuit consisting of an operational amplifier with five resonant circuits and a active filter, and it is suitable for radio-cassette tape recorders, car stereos or music center audio systems.

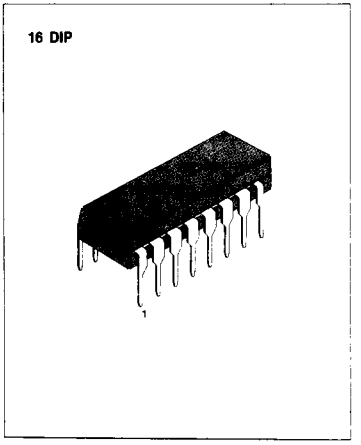

FEATURES

- **Tone control with independent adjustment of each band through an external capacitor.**
- **Gain control through an external variable resistor.**
- **Increasing the bands by adding resonant circuit or using two KA2223 in series.**
- **Low noise (V_{NO} = 7μV: Typ. Flat).**
- **Low distortion (THD=0.02% Typ. f=1KHz Flat).**
- **Large allowable input (V_I = 2.3V: Typ, V_{CC} = 9V, f = 1KHz Flat).**
- **Operating supply voltage range: V_{CC} = 5V ~ 13V**

ORDERING INFORMATION

Device	Package	Operating Temperature
KA2223	16 DIP	− 20°C ~ + 70°C

BLOCK DIAGRAM

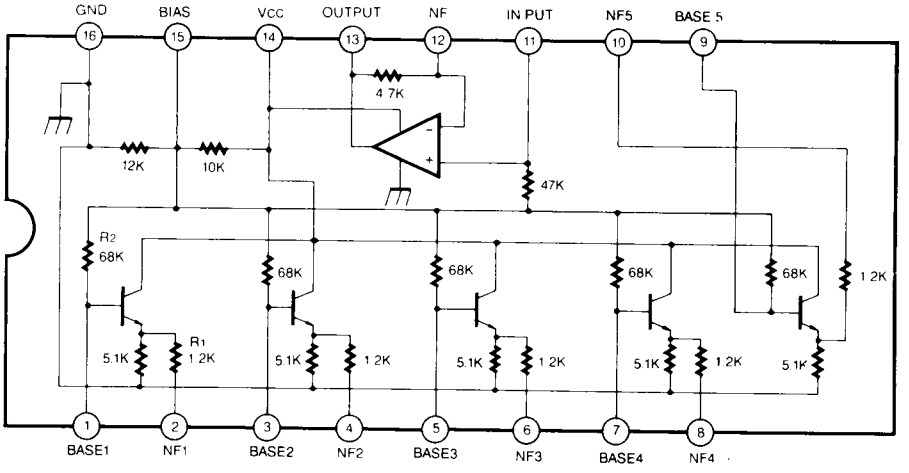

Fig. 1

Printed from www.freetradezone.com, a service of Partminer, Inc.
This Material Copyrighted by Its Respective Manufacturer

ABSOLUTE MAXIMUM RATINGS (Ta = 25°C)

Characteristic	Symbol	Value	Unit
Supply Voltage	V_{CC}	20	V
Power Dissipation	P_D	700	mW
Operating Temperature	T_{OPR}	−20 ~ +70	°C
Storage Temperature	T_{STG}	−55 ~ +125	°C

ELECTRICAL CHARACTERISTICS

(T_a = 25°C, V_{CC} = 9V unless otherwise specified)

Characteristic		Symbol	Test f(Hz)	Test Conditions	Min	Typ	Max	Unit
Quiescent Circuit Current		I_{CCQ}		V_I = 0	3.0	5.2	8.0	mA
Voltage Gain	Flat	G_V (Flat)	1K	V_I = −10dBm	−3.8	−0.8	2.2	dB
	Boost	G_V (Boost)	108	V_I = −10dBm	8	10.5	12	dB
			343					dB
			1.08K					dB
			3.43K					dB
			10.8K					dB
	Cut	G_V (Cut)	108	V_I = −10dBm	−12	−10.5	−8	dB
			343					dB
			1.08K					dB
			3.43K					dB
			10.8K					dB
Total Harmonic Distortion		THD	1K	V_I = 1V		0.02	0.1	%
Output Noise Voltage		V_{NO}	Flat, Input Short BW(−3dB) = 10Hz ~ 30KHz			7.0	30	μV

Printed from www.freetradezone.com, a service of Partminer, Inc.
This Material Copyrighted by Its Respective Manufacturer

TEST CIRCUIT

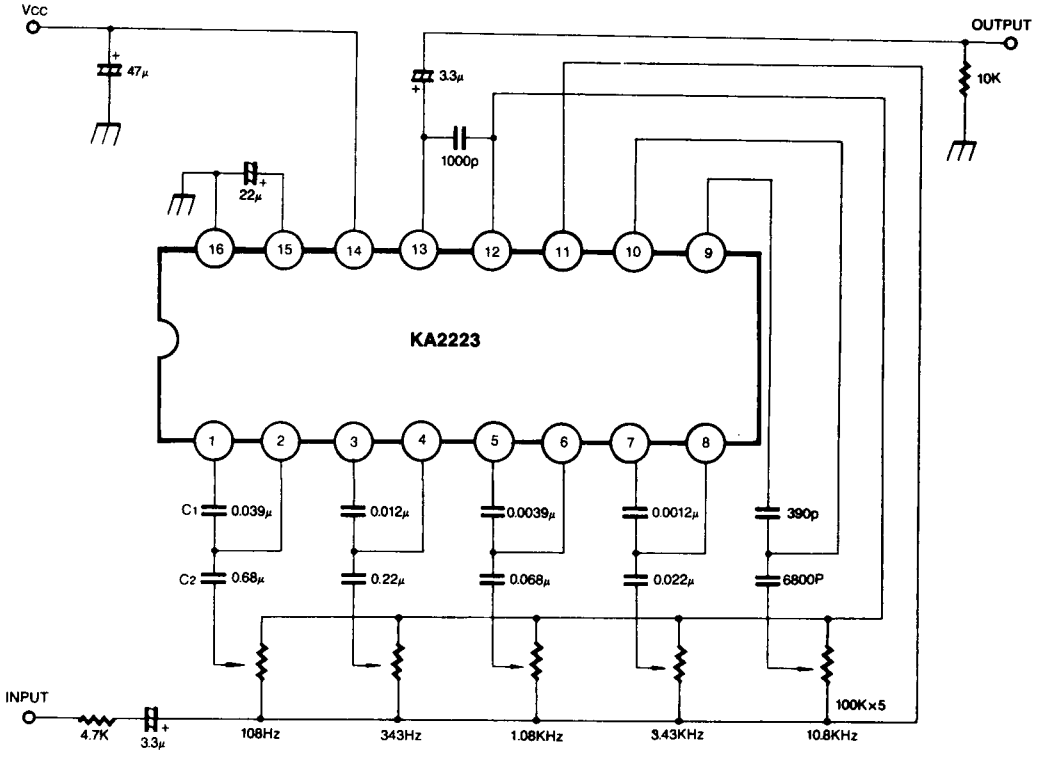

Fig. 2

$$\text{Resonant frequency } f_O = \frac{1}{2\pi\sqrt{R_1 R_2 C_1 C_2}}$$

(R_1 =1.2K, R_2=68K on-chip resistor)

Printed from www.freetradezone.com, a service of Partminer, Inc.
This Material Copyrighted by Its Respective Manufacturer

APPLICATION CIRCUIT

1. 7 BAND

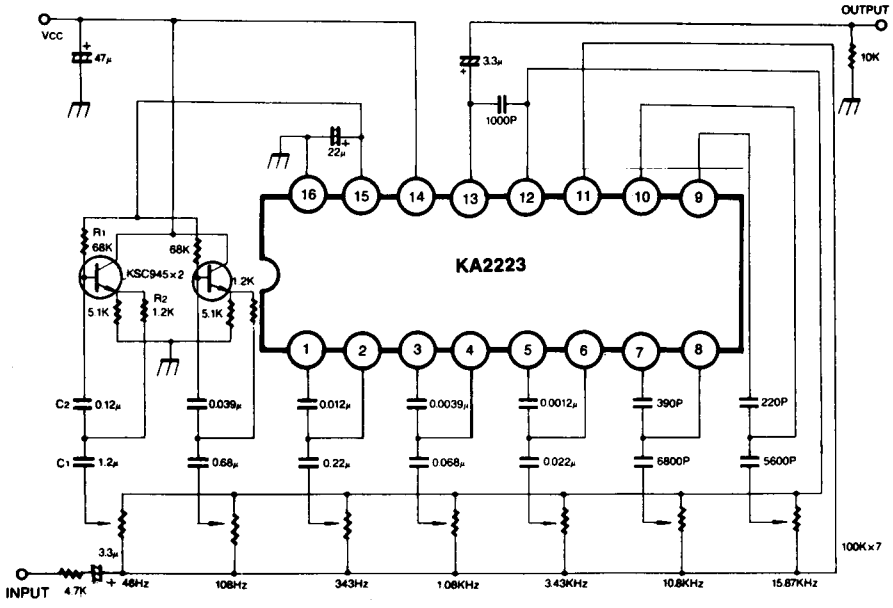

Fig. 3

2. 10 BAND

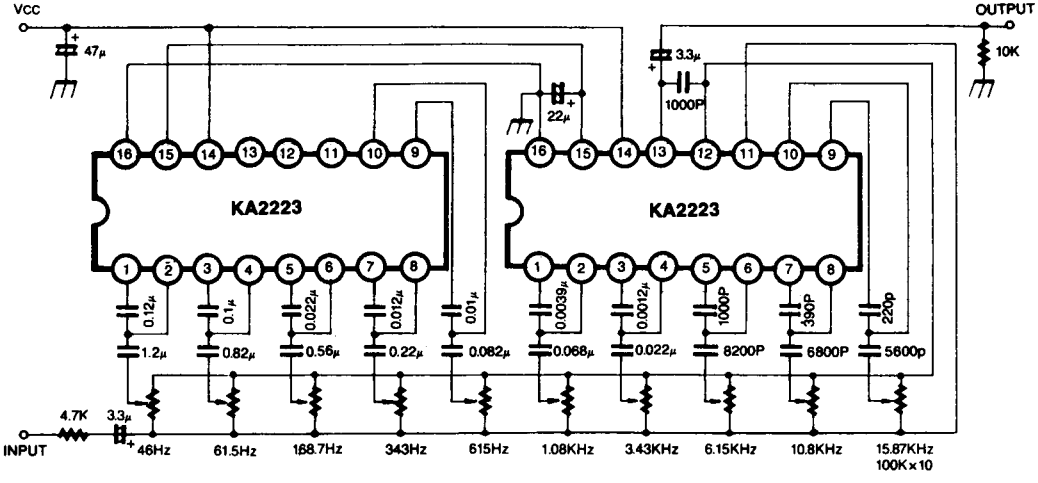

Fig. 4

Printed from www.freetradezone.com, a service of Partminer, Inc.
This Material Copyrighted by Its Respective Manufacturer