GSD

KA-99-66

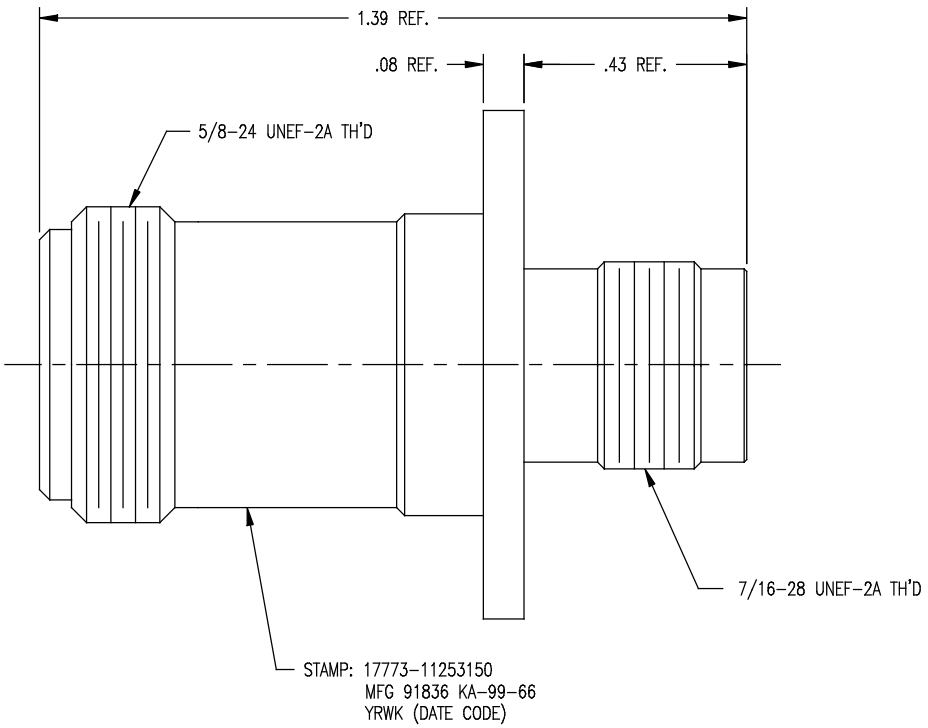

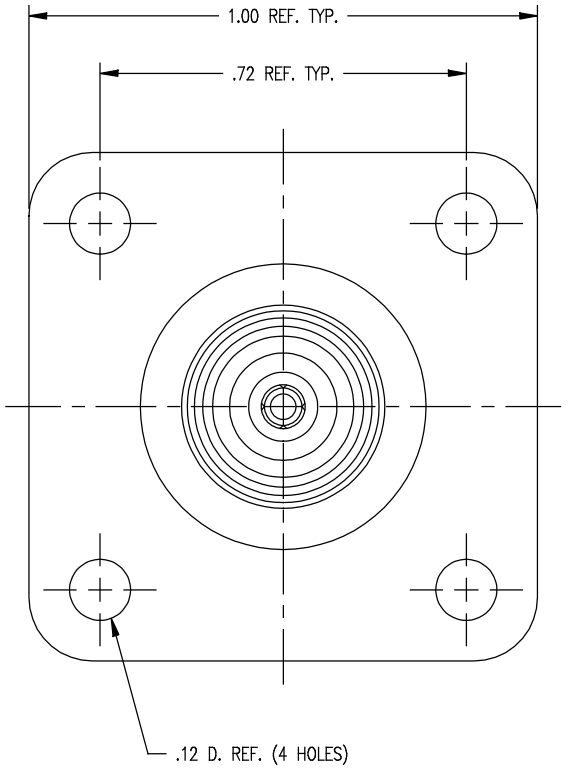

NOTES:
1. INTERFACE PER MIL-STD-348, FIG. 304-2 AND FIG. 313-2.
2. MATERIALS:
   INSULATORS-TEFLON, ASTM-D-1457
   CENTER CONTACT-BER. COP., ASTM-B-196
   ALL OTHER PARTS-BRASS, ASTM-B16
3. FINISHES:
   CENTER CONTACT & C-RING-GOLD PLATE PER MIL-G-45204
   ALL OTHER METAL PARTS-SILVER PLATE PER QQ-S-365
4. ELECTRIAL CHARACTERISTICS:
   NOMINAL IMPEDANCE-50 OHMS
   WORKING VOLTAGE-500 VRMS
   FREQUENCY RANGE-DC TO 11 GHz

GSD

REVISIONS

ISSUE	CHANGES
4	CN 24158 C JEP 01/31/83
5	CN 37893 E TML 09/13/99

KA9966S

SCALE 4:1

APPROX SURFACE AREA

USED ON

REF: ARMY ORDINANCE 11253150 REV. A

ADAPTER, N-TNC, PANEL, F-F

DRAWN	JCA	DATE	04/06/93
DESIGN	MJB	DATE	04/06/93
APPR.		DATE	

KINGS
ELECTRONICS CO., INC.
ROCK HILL, SOUTH CAROLINA 29730

KA-99-66