Document Title

64M x 8 Bit , 32M x 16 Bit NAND Flash Memory

Revision History

Revision No.	History	Draft Date	Remark
0.0	Initial issue.	Apr. 25th 2002	Preliminary
0.1	TBGA(K9F12XXX0A-DCB0/DIB0) size information is changed. (before) 9 x 11 /0.8mm pitch , Width 1.0 mm (after) To Be Decided.	May. 9th 2002	
0.2	TBGA(K9F12XXX0A-DCB0/DIB0) size information is changed. (before) 9 x 11 /0.8mm pitch , Width 1.0 mm, to (after) 8.5 x 15 /0.8mm pitch, Width 1.0mm	July, 10th 2002	
0.3	Pin numbering includes TBGA Dummy ball . (Page5)	Aug, 10th 2002	
0.4	Pin numbering excludes TBGA Dummy ball . (Page5) Pin assignment of TBGA dummy ball is changed. (before) DNU --> (after) N.C	Oct, 21th 2002	
0.5	1. Add the Rp vs tr ,tf & Rp vs ibusy graph for 1.8V device (Page 43) 2. Add the data protection Vcc guidence for 1.8V device - below about 1.1V. (Page 44)	Nov, 21th 2002	
0.6	The min. Vcc value 1.8V devices is changed. K9F1208Q0A : Vcc 1.65V~1.95V --> 1.70V~1.95V	Mar. 5th 2003	
0.7	Pb-free Package is added. K9F1208U0A-FCB0,FIB0 K9F1208Q0A-HCB0,HIB0 K9F1216U0A-HCB0,HIB0 K9F1216U0A-PCB0,PIB0 K9F1216Q0A-HCB0,HIB0 K9F1208U0A-HCB0,HIB0 K9F1208U0A-PCB0,PIB0	Mar. 13rd 2003	
0.8	Errata is added.(Front Page)-K9F1208Q0A tWC tWH tWP tRC tREH tRP tREA tCEA Specification 45 15 25 50 15 25 30 45 Relaxed value 60 20 40 60 20 40 40 55	Mar. 17th 2003	
0.9	New definition of the number of invalid blocks is added. (Minimum 1004 valid blocks are guaranteed for each contiguous 128Mb memory space.)	Apr. 4th 2003	
1.0	1. 2.65V device is added. 2. Note is added. (VIL can undershoot to -0.4V and VIH can overshoot to VCC +0.4V for durations of 20 ns or less.)	Jul. 4th 2003	

Note : For more detailed features and specifications including FAQ, please refer to Samsung's Flash web site.
http://www.samsung.com/Products/Semiconductor/Flash/TechnicalInfo/datasheets.htm

The attached datasheets are prepared and approved by SAMSUNG Electronics. SAMSUNG Electronics CO., LTD. reserve the right to change the specifications. SAMSUNG Electronics will evaluate and reply to your requests and questions about device. If you have any questions, please contact the SAMSUNG branch office near you.

Document Title

64M x 8 Bit , 32M x 16 Bit NAND Flash Memory

Revision History

Revision No.	History	Draft Date	Remark
1.1	Errata is deleted. AC parameters are changed.-K9F1208Q0A tWC tWH tWP tRC tREH tRP tREA tCEA Before 45 15 25 50 15 25 30 45 After 60 20 40 60 20 40 40 55	Aug. 1st 2003	
1.2	1. K9F1208Q0A-DC(I)B0,K9F1216Q0A-DC(I)B0, K9F1208D0A-DC(I)B0, K9F1216D0A-DC(I)B0,K9F1208U0A-DC(I)B0, K9F1216U0A-DC(I)B0 are deleted.	Oct. 14th 2003	
1.3	1. Add the Protrusion/Burr value in WSOP1 PKG Diagram.	Apr. 24th 2004	
1.4	1. PKG(TSOP1, WSOP1) Dimension Change	May. 24th 2004	
1.5	1. NAND Flash Technical Notes is changed. -Invalid block -> initial invalid block (page 16) -Error in write or read operation (page 17) -Program Flow Chart (page 17)	Oct. 25th. 2004	

Note : For more detailed features and specifications including FAQ, please refer to Samsung's Flash web site.
http://www.samsung.com/Products/Semiconductor/Flash/TechnicalInfo/datasheets.htm

The attached datasheets are prepared and approved by SAMSUNG Electronics. SAMSUNG Electronics CO., LTD. reserve the right to change the specifications. SAMSUNG Electronics will evaluate and reply to your requests and questions about device. If you have any questions, please contact the SAMSUNG branch office near you.

64M x 8 Bit / 32M x 16 Bit NAND Flash Memory

PRODUCT LIST

Part Number	Vcc Range	Organization	PKG Type
K9F1208U0A-Y,P	2.7 ~ 3.6V	X8	TSOP1
K9F1208U0A-V,F			WSOP1
K9F1216U0A-Y,P		X16	TSOP1

FEATURES

- Voltage Supply
  -2.7 ~ 3.6 V
- Organization
  - Memory Cell Array
    - X8 device(K9F1208U0A) : (64M + 2048K)bit x 8 bit
    - X16 device(K9F1216U0A) : (32M + 1024K)bit x 16bit
  - Data Register
    - X8 device(K9F1208U0A) : (512 + 16)bit x 8bit
    - X16 device(K9F1216U0A) : (256 + 8)bit x16bit
- Automatic Program and Erase
  - Page Program
    - X8 device(K9F1208U0A) : (512 + 16)Byte
    - X16 device(K9F1216U0A) : (256 + 8)Word
  - Block Erase :
    - X8 device(K9F1208U0A) : (16K + 512)Byte
    - X16 device(K9F1216U0A) : (8K + 256)Word
- Page Read Operation
  - Page Size
    - X8 device(K9F1208U0A) : (512 + 16)Byte
    - X16 device(K9F1216U0A) : (256 + 8)Word
  - Random Access : 12μs(Max.)
  - Serial Page Access : 50ns(Min.)
- Fast Write Cycle Time
  - Program time : 200μs(Typ.)
  - Block Erase Time : 2ms(Typ.)
- Command/Address/Data Multiplexed I/O Port
- Hardware Data Protection
  - Program/Erase Lockout During Power Transitions
- Reliable CMOS Floating-Gate Technology
  - Endurance : 100K Program/Erase Cycles
  - Data Retention : 10 Years
- Command Register Operation
- Intelligent Copy-Back
- Unique ID for Copyright Protection
- Package
  - K9F12XXU0A-YCB0/YIB0
    48 - Pin TSOP I (12 x 20 / 0.5 mm pitch)
  - K9F1208U0A-VCB0/VIB0
    48 - Pin WSOP I (12X17X0.7mm)
  - K9F12XXU0A-PCB0/PIB0
    48 - Pin TSOP I (12 x 20 / 0.5 mm pitch)- Pb-free Package
  - K9F1208U0A-FCB0/FIB0
    48 - Pin WSOP I (12X17X0.7mm)- Pb-free Package
    * K9F1208U0A-V,F(WSOPI) is the same device as K9F1208U0A-Y,P(TSOP1) except package type.

GENERAL DESCRIPTION

Offered in 64Mx8bit or 32Mx16bit, the K9F12XXU0A is 512M bit with spare 16M bit capacity. The device is offered in 3.3V Vcc. Its NAND cell provides the most cost-effective solutIon for the solid state mass storage market. A program operation can be performed in typical 200μs on the 528-byte(X8 device) or 264-word(X16 device) page and an erase operation can be performed in typical 2ms on a 16K-byte(X8 device) or 8K-word(X16 device) block. Data in the page can be read out at 50ns cycle time per byte(X8 device) or word(X16 device). The I/O pins serve as the ports for address and data input/output as well as command input. The on-chip write control automates all program and erase functions including pulse repetition, where required, and internal verification and margining of data. Even the write-intensive systems can take advantage of the K9F12XXU0A's extended reliability of 100K program/erase cycles by providing ECC(Error Correcting Code) with real time mapping-out algorithm. The K9F12XXU0A is an optimum solution for large nonvolatile storage applications such as solid state file storage and other portable applications requiring non-volatility.

PIN CONFIGURATION (TSOP1)

K9F12XXU0A-YCB0,PCB0/YIB0,PIB0

X16	X8		X8	X16
N.C	N.C	1 / 48	N.C	Vss
N.C	N.C	2 / 47	N.C	I/O15
N.C	N.C	3 / 46	N.C	I/O7
N.C	N.C	4 / 45	N.C	I/O14
N.C	N.C	5 / 44	I/O7	I/O6
N.C	N.C	6 / 43	I/O6	I/O13
R/B	R/B	7 / 42	I/O5	I/O5
RE	RE	8 / 41	I/O4	I/O12
CE	CE	9 / 40	N.C	I/O4
N.C	N.C	10 / 39	N.C	N.C
N.C	N.C	11 / 38	N.C	N.C
Vcc	Vcc	12 / 37	Vcc	Vcc
Vss	Vss	13 / 36	Vss	N.C
N.C	N.C	14 / 35	N.C	N.C
N.C	N.C	15 / 34	N.C	N.C
CLE	CLE	16 / 33	N.C	I/O11
ALE	ALE	17 / 32	I/O3	I/O3
WE	WE	18 / 31	I/O2	I/O10
WP	WP	19 / 30	I/O1	I/O2
N.C	N.C	20 / 29	I/O0	I/O9
N.C	N.C	21 / 28	N.C	I/O1
N.C	N.C	22 / 27	N.C	I/O8
N.C	N.C	23 / 26	N.C	I/O0
N.C	N.C	24 / 25	N.C	Vss

PACKAGE DIMENSIONS

48-PIN LEAD/LEAD FREE PLASTIC THIN SMALL OUT-LINE PACKAGE TYPE(I)

48 - TSOP1 - 1220F

Unit :mm/Inch

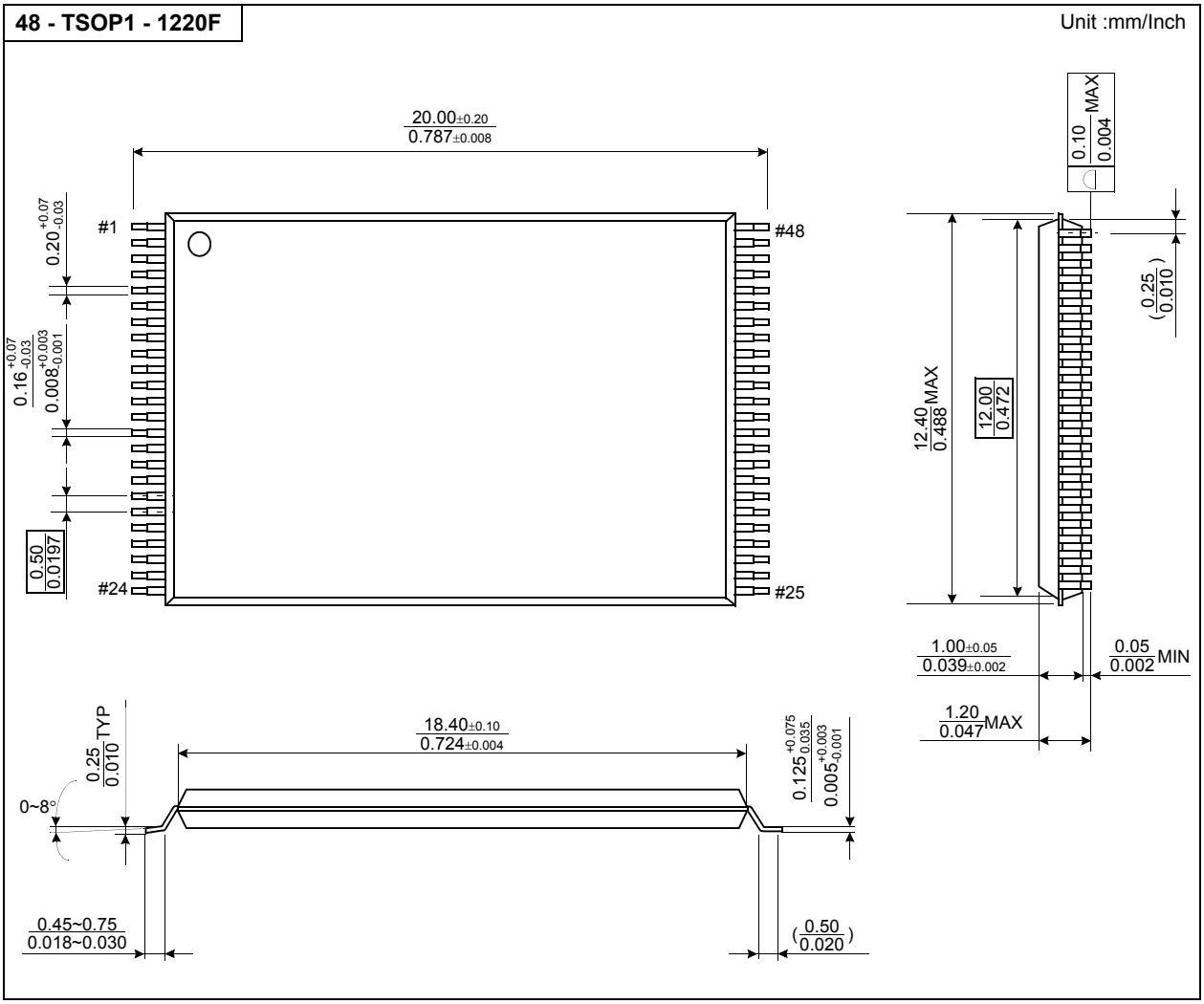

PIN CONFIGURATION (WSOP1)

K9F1208U0A-VCB0,FCB0/VIB0,FIB0

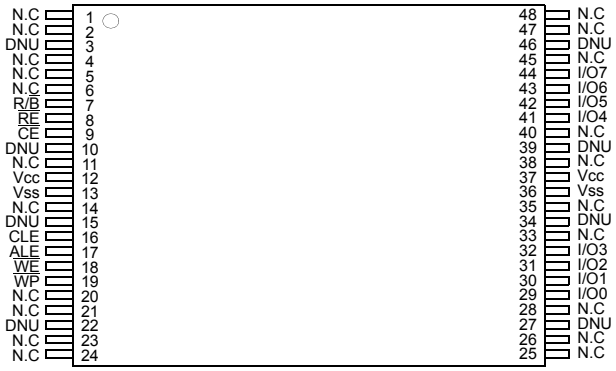

PACKAGE DIMENSIONS

48-PIN LEAD PLASTIC VERY VERY THIN SMALL OUT-LINE PACKAGE TYPE (I)

48 - WSOP1 - 1217F

Unit :mm

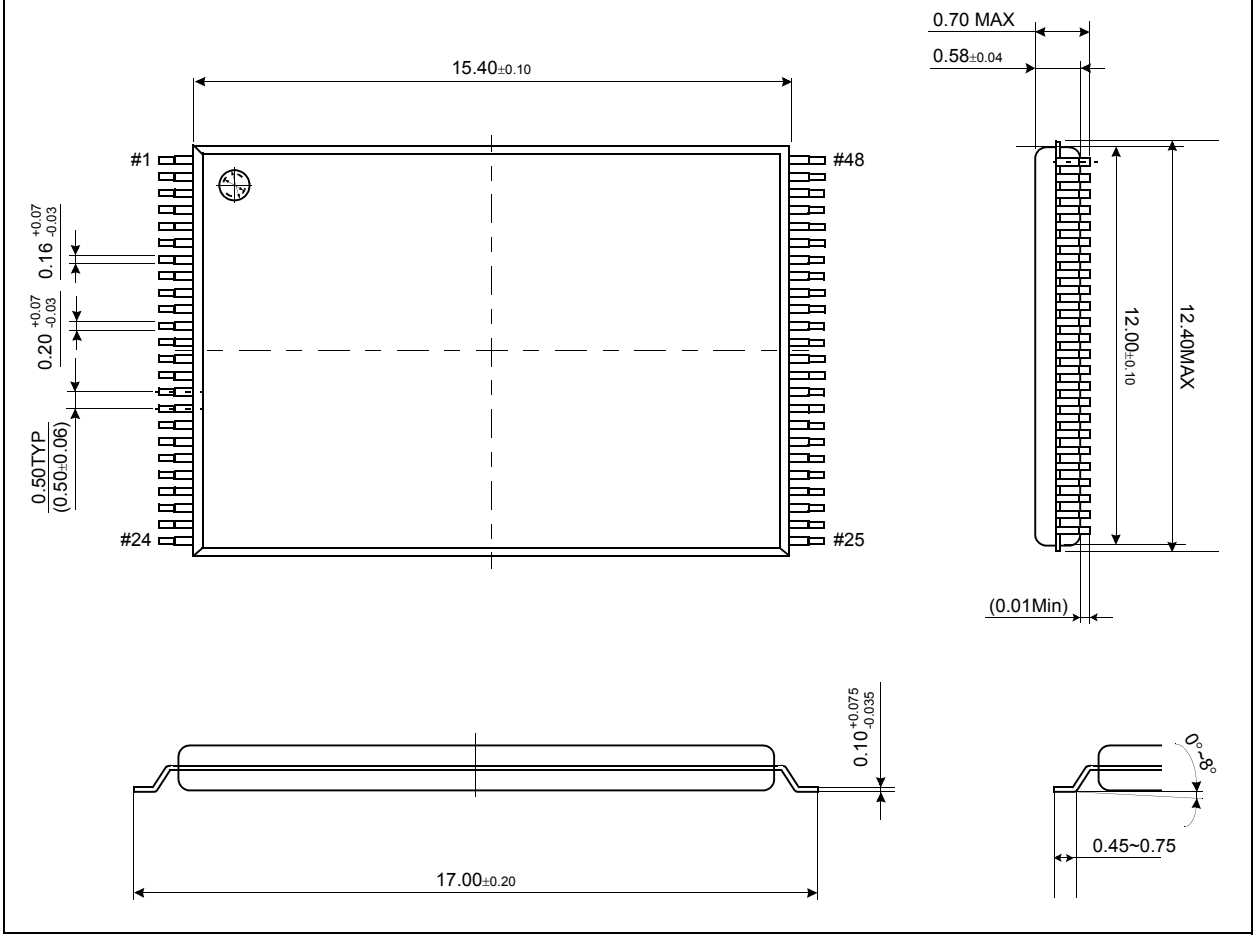

PIN DESCRIPTION

Pin Name	Pin Function
I/O_0 ~ I/O_7 (K9F1208X0A) I/O_0 ~ I/O_{15} (K9F1216X0A)	**DATA INPUTS/OUTPUTS** The I/O pins are used to input command, address and data, and to output data during read operations. The I/O pins float to high-z when the chip is deselected or when the outputs are disabled. I/O8 ~ I/O15 are used only in X16 organization device. Since command input and address input are x8 operation, I/O8 ~ I/O15 are not used to input command & address. I/O8 ~ I/O15 are used only for data input and output.
CLE	**COMMAND LATCH ENABLE** The CLE input controls the activating path for commands sent to the command register. When active high, commands are latched into the command register through the I/O ports on the rising edge of the $\overline{WE}$ signal.
ALE	**ADDRESS LATCH ENABLE** The ALE input controls the activating path for address to the internal address registers. Addresses are latched on the rising edge of $\overline{WE}$ with ALE high.
$\overline{CE}$	**CHIP ENABLE** The $\overline{CE}$ input is the device selection control. When the device is in the Busy state, $\overline{CE}$ high is ignored, and the device does not return to standby mode in program or erase operation. Regarding $\overline{CE}$ control during read operation, refer to 'Page read' section of Device operation .
$\overline{RE}$	**READ ENABLE** The $\overline{RE}$ input is the serial data-out control, and when active drives the data onto the I/O bus. Data is valid tREA after the falling edge of $\overline{RE}$ which also increments the internal column address counter by one.
$\overline{WE}$	**WRITE ENABLE** The $\overline{WE}$ input controls writes to the I/O port. Commands, address and data are latched on the rising edge of the $\overline{WE}$ pulse.
$\overline{WP}$	**WRITE PROTECT** The $\overline{WP}$ pin provides inadvertent write/erase protection during power transitions. The internal high voltage generator is reset when the $\overline{WP}$ pin is active low.
R/$\overline{B}$	**READY/BUSY OUTPUT** The R/$\overline{B}$ output indicates the status of the device operation. When low, it indicates that a program, erase or random read operation is in process and returns to high state upon completion. It is an open drain output and does not float to high-z condition when the chip is deselected or when outputs are disabled.
V_{CCQ}	**OUTPUT BUFFER POWER** V_{CCQ} is the power supply for Output Buffer. V_{CCQ} is internally connected to Vcc, thus should be biased to Vcc.
Vcc	**POWER** V_{CC} is the power supply for device.
Vss	**GROUND**
N.C	**NO CONNECTION** Lead is not internally connected.
DNU	**DO NOT USE** Leave it disconnected.

NOTE : Connect all V_{CC} and V_{SS} pins of each device to common power supply outputs.
Do not leave V_{CC} or V_{SS} disconnected.

Figure 1-1. K9F1208X0A (X8) FUNCTIONAL BLOCK DIAGRAM

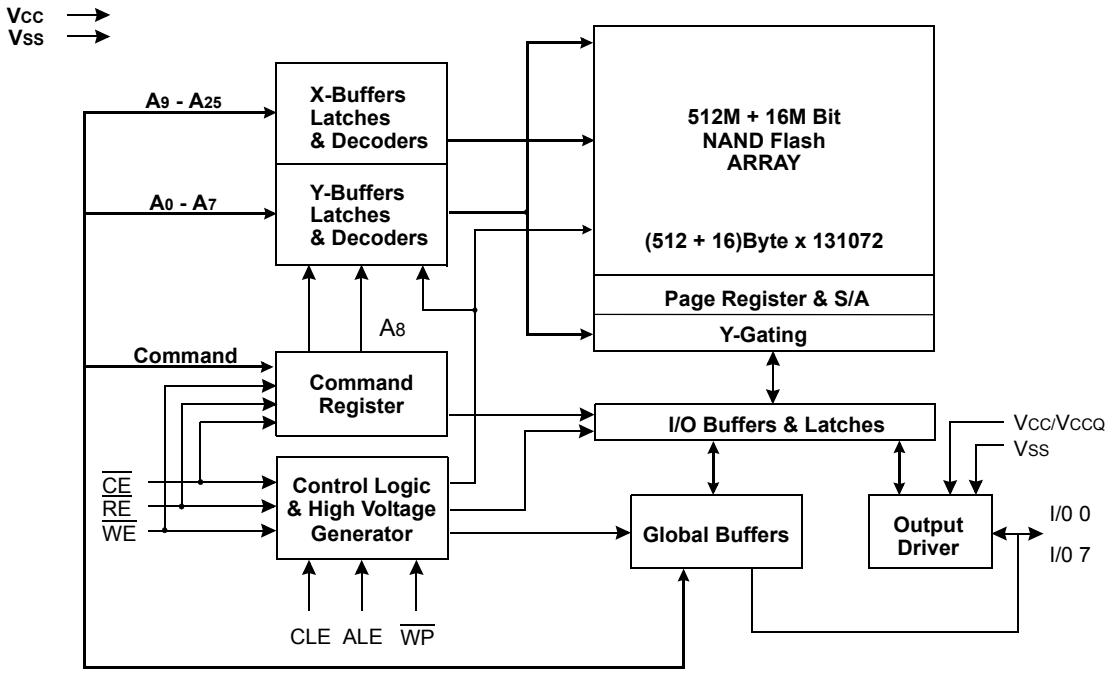

Figure 2-1. K9F1208X0A (X8) ARRAY ORGANIZATION

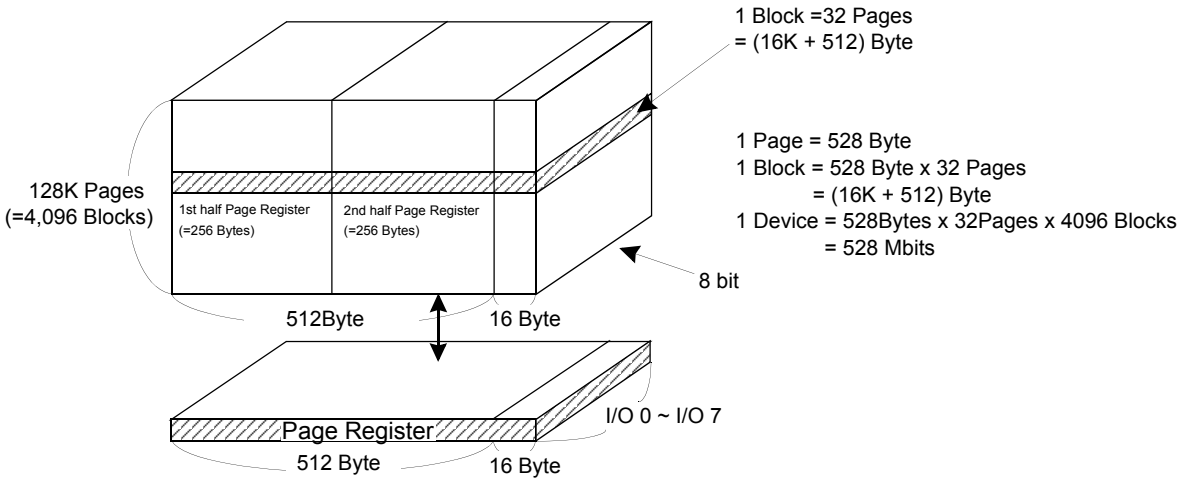

	I/O 0	I/O 1	I/O 2	I/O 3	I/O 4	I/O 5	I/O 6	I/O 7
1st Cycle	A0	A1	A2	A3	A4	A5	A6	A7
2nd Cycle	A9	A10	A11	A12	A13	A14	A15	A16
3rd Cycle	A17	A18	A19	A20	A21	A22	A23	A24
4th Cycle	A25	*L	*L	*L	*L	*L	*L	*L

Column Address
Row Address (Page Address)

NOTE : Column Address : Starting Address of the Register.
00h Command(Read) : Defines the starting address of the 1st half of the register.
01h Command(Read) : Defines the starting address of the 2nd half of the register.
* A8 is set to "Low" or "High" by the 00h or 01h Command.
* L must be set to "Low".
* The device ignores any additional input of address cycles than reguired.

Figure 1-2. K9F1216X0A (X16) FUNCTIONAL BLOCK DIAGRAM

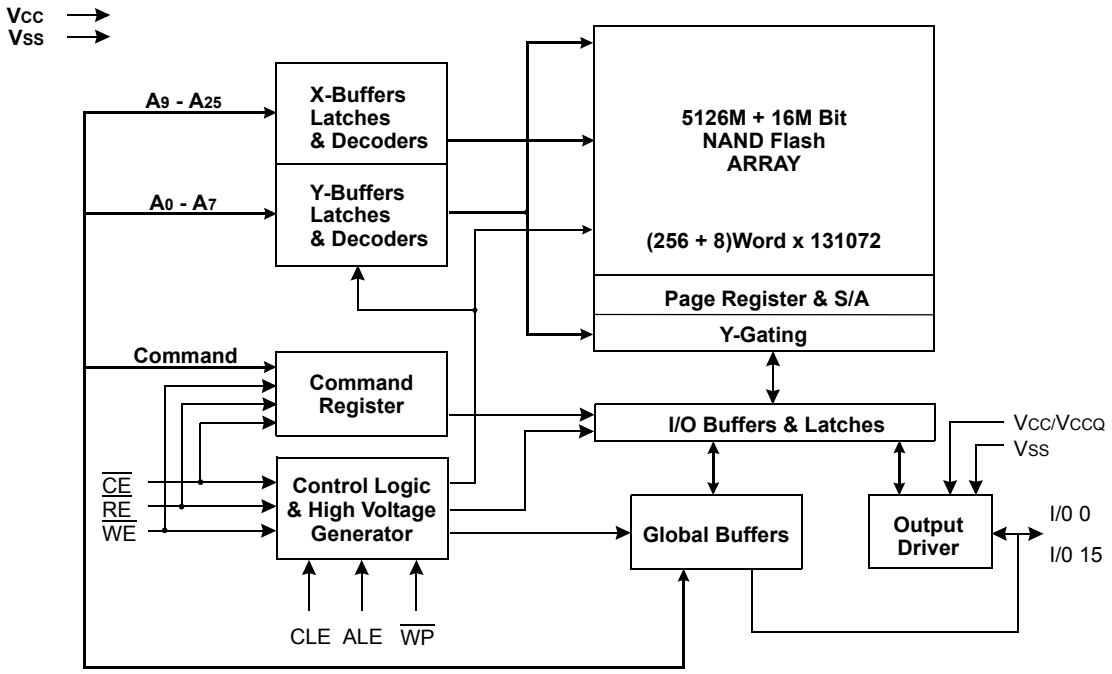

Figure 2-2. K9F1216X0A (X16) ARRAY ORGANIZATION

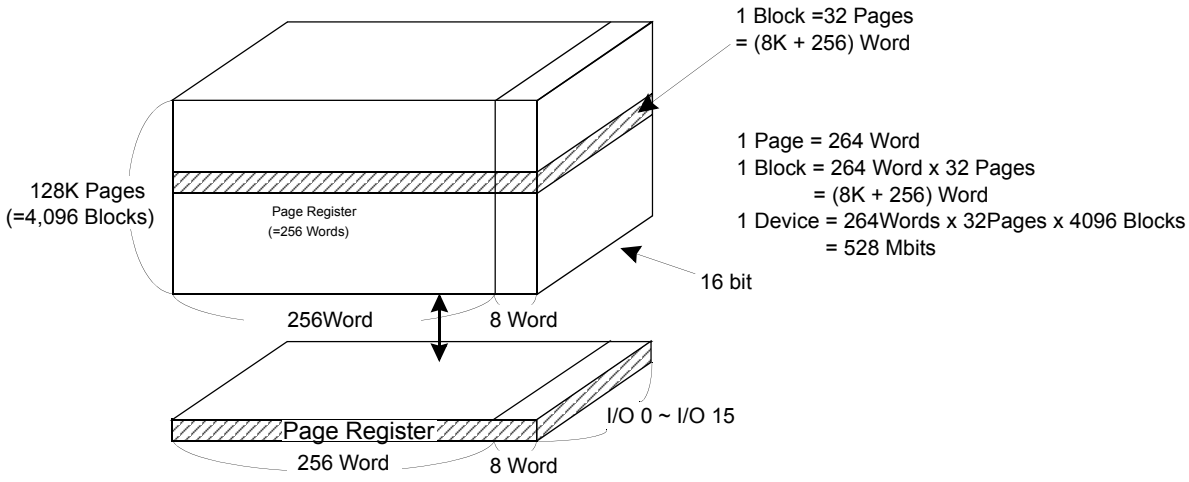

	I/O 0	I/O 1	I/O 2	I/O 3	I/O 4	I/O 5	I/O 6	I/O 7	I/O8 to 15	
1st Cycle	A0	A1	A2	A3	A4	A5	A6	A7	L*	Column Address
2nd Cycle	A9	A10	A11	A12	A13	A14	A15	A16	L*	Row Address (Page Address)
3rd Cycle	A17	A18	A19	A20	A21	A22	A23	A24	L*	
4th Cycle	A25	L*	L*	L*	L*	L*	L*	L*	L*	

NOTE : Column Address : Starting Address of the Register.

* L must be set to "Low".

* The device ignores any additional input of address cycles than reguired.

Product Introduction

The K9F1208X0A is a 528Mbit(553,648,218 bit) memory organized as 131,072 rows(pages) by 528 columns. Spare sixteen columns are located from column address of 512 to 527. A 528-byte(x8 device), 264word(x16 device) data register is connected to memory cell arrays accommodating data transfer between the I/O buffers and memory during page read and page program operations. The memory array is made up of 16 cells that are serially connected to form a NAND structure. Each of the 16 cells resides in a different page. A block consists of two NAND structured strings. A NAND structure consists of 16 cells. Total 135168 NAND cells reside in a block. The array organization is shown in Figure 2. The program and read operations are executed on a page basis, while the erase operation is executed on a block basis. The memory array consists of 4,096 separately erasable 16K-byte blocks. It indicates that the bit by bit erase operation is prohibited on the K9F1208X0A.

The K9F1208X0A has addresses multiplexed into 8 I/O's. This scheme dramatically reduces pin counts and allows systems upgrades to future densities by maintaining consistency in system board design. Command, address and data are all written through I/O's by bringing $\overline{WE}$ to low while $\overline{CE}$ is low. Data is latched on the rising edge of $\overline{WE}$. Command Latch Enable(CLE) and Address Latch Enable(ALE) are used to multiplex command and address respectively, via the I/O pins. The 64M byte physical space requires 26 addresses(X8 device) or 25 addresses(X16 device), thereby requiring four cycles for byte-level addressing: column address, low row address and high row address, in that order. Page Read and Page Program need the same four address cycles following the required command input. In Block Erase operation, however, only the three row address cycles are used. Device operations are selected by writing specific commands into the command register. Table 1 defines the specific commands of the K9F1208X0A.

The device provides simultaneous program/erase capability up to four pages/blocks. By dividing the memory array into four 128Mbit separate planes, simultaneous multi-plane operation dramatically increases program/erase performance by 4X while still maintaining the conventional 512 byte(X8 device) or 256 word(X16 device) structure.
The extended pass/fail status for multi-plane program/erase allows system software to quickly identify the failing page/block out of selected multiple pages/blocks. Usage of multi-plane operations will be described further throughout this document.

In addition to the enhanced architecture and interface, the device incorporates copy-back program feature from one page to another of the same plane without the need for transporting the data to and from the external buffer memory. Since the time-consuming burst-reading and data-input cycles are removed, system performance for solid-state disk application is significantly increased.

The device includes one block sized OTP(One Time Programmable), which can be used to increase system security or to provide identification capabilities. Detailed information can be obtained by contact with Samsung.

Table 1. Command Sets

Function	1st. Cycle	2nd. Cycle	3rd. Cycle	Acceptable Command during Busy
Read 1	00h/01h(1)	-	-	
Read 2	50h	-	-	
Read ID	90h	-	-	
Reset	FFh	-	-	O
Page Program (True)(2)	80h	10h	-	
Page Program (Dummy)(2)	80h	11h	-	
Copy-Back Program(True)(2)	00h	8Ah	10h	
Copy-Back Program(Dummy)(2)	03h	8Ah	11h	
Block Erase	60h	D0h	-	
Multi-Plane Block Erase	60h----60h	D0h	-	
Read Status	70h	-	-	O
Read Multi-Plane Status	71h(3)	-	-	O

NOTE : 1. The 00h command defines starting address of the 1st half of registers.
The 01h command defines starting address of the 2nd half of registers.
After data access on the 2nd half of register by the 01h command, the status pointer is automatically moved to the 1st half register(00h) on the next cycle.
2. Page Program(True) and Copy-Back Program(True) are available on 1 plane operation.
Page Program(Dummy) and Copy-Back Program(Dummy) are available on the 2nd,3rd,4th plane of multi plane operation.
3. The 71h command should be used for read status of Multi Plane operation.

Caution : Any undefined command inputs are prohibited except for above command set of Table 1.

Memory Map

The device is arranged in four 128Mbit memory planes. Each plane contains 1,024 blocks and 528 byte(X8 device) or 264 word(X16 device) page registers. This allows it to perform simultaneous page program and block erase by selecting one page or block from each plane. The block address map is configured so that multi-plane program/erase operations can be executed for every four sequential blocks.

Figure 3. Memory Array Map

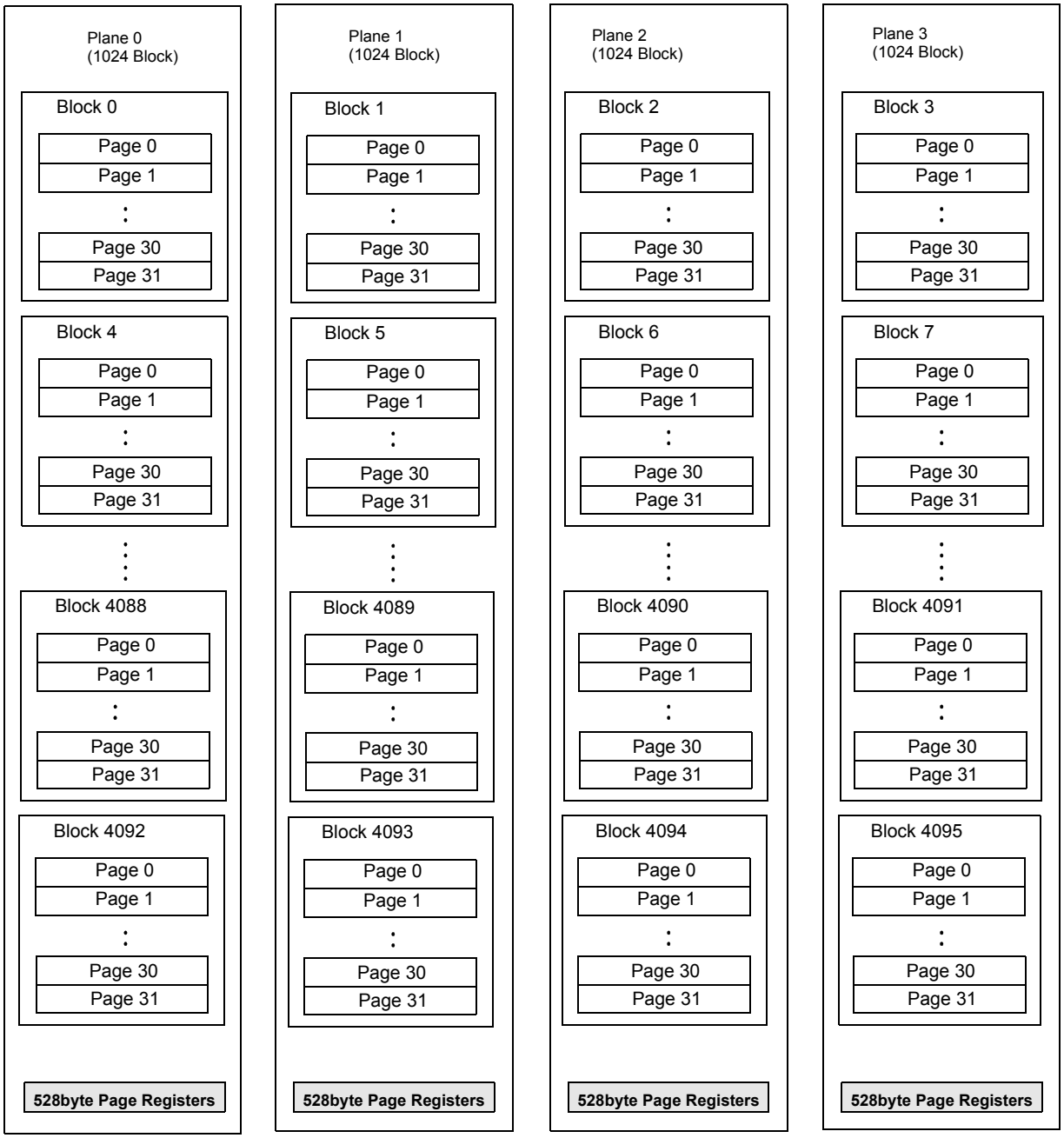

ABSOLUTE MAXIMUM RATINGS

Parameter		Symbol	Rating	Unit
Voltage on any pin relative to V_{SS}		$V_{IN/OUT}$	-0.6 to + 4.6	V
		V_{CC}	-0.6 to + 4.6	
		V_{CCQ}	-0.6 to + 4.6	
Temperature Under Bias	K9F12XXU0A-XCB0	T_{BIAS}	-10 to +125	°C
	K9F12XXU0A-XIB0		-40 to +125	
Storage Temperature	K9F12XXU0A-XCB0	T_{STG}	-65 to +150	°C
	K9F12XXU0A-XIB0			
Short Circuit Current		Ios	5	mA

NOTE :
1. Minimum DC voltage is -0.6V on input/output pins. During transitions, this level may undershoot to -2.0V for periods <30ns.
   Maximum DC voltage on input/output pins is V_{CC}+0.3V which, during transitions, may overshoot to V_{CC}+2.0V for periods <20ns.
2. Permanent device damage may occur if ABSOLUTE MAXIMUM RATINGS are exceeded. Functional operation should be restricted to the conditions as detailed in the operational sections of this data sheet. Exposure to absolute maximum rating conditions for extended periods may affect reliability.

RECOMMENDED OPERATING CONDITIONS

(Voltage reference to GND, K9F12XXU0A-XCB0 :T_A=0 to 70°C, K9F12XXU0A-XIB0:T_A=-40 to 85°C)

Parameter	Symbol	Min	Typ.	Max	Unit
Supply Voltage	V_{CC}	2.7	3.3	3.6	V
Supply Voltage	V_{CCQ}	2.7	3.3	3.6	V
Supply Voltage	V_{SS}	0	0	0	V

DC AND OPERATING CHARACTERISTICS(Recommended operating conditions otherwise noted.)

Parameter		Symbol	Test Conditions	Min	Typ	Max	Min	Typ	Max	Unit
Operating Current	Sequential Read	$I_{CC}1$	tRC=50ns, $\overline{CE}$=V_{IL} I_{OUT}=0mA	-	10	20	-	10	20	mA
	Program	$I_{CC}2$	-	-	10	20	-	10	20	
	Erase	$I_{CC}3$	-	-	10	20	-	10	20	
Stand-by Current(TTL)		$I_{SB}1$	$\overline{CE}$=V_{IH}, $\overline{WP}$=0V/V_{CC}	-	-	1	-	-	1	
Stand-by Current(CMOS)		$I_{SB}2$	$\overline{CE}$=V_{CC}-0.2, $\overline{WP}$=0V/V_{CC}	-	10	50	-	10	50	μA
Input Leakage Current		I_{LI}	V_{IN}=0 to Vcc(max)	-	-	±10	-	-	±10	
Output Leakage Current		I_{LO}	V_{OUT}=0 to Vcc(max)	-	-	±10	-	-	±10	
Input High Voltage		V_{IH}*	I/O pins	V_{CCQ} -0.4	-	V_{CCQ} +0.3	2.0	-	V_{CCQ} +0.3	V
			Except I/O pins	V_{CC} -0.4	-	V_{CC} +0.3	2.0	-	V_{CC} +0.3	
Input Low Voltage, All inputs		V_{IL}*	-	-0.3	-	0.5	-0.3	-	0.8	
Output High Voltage Level		V_{OH}	I_{OH}=-400μA	V_{CCQ} -0.4	-	-	2.4	-	-	
Output Low Voltage Level		V_{OL}	I_{OL}=2.1mA	-	-	0.4	-	-	0.4	
Output Low Current(R/$\overline{B}$)		I_{OL}(R/$\overline{B}$)	V_{OL}=0.4V	3	4	-	8	10	-	mA

NOTE : VIL can undershoot to -0.4V and VIH can overshoot to VCC +0.4V for durations of 20 ns or less.

VALID BLOCK

Parameter	Symbol	Min	Typ.	Max	Unit
Valid Block Number	N_{VB}	4,026	-	4,096	Blocks

NOTE :
1. The device may include invalid blocks when first shipped. Additional invalid blocks may develop while being used. The number of valid blocks is presented with both cases of invalid blocks considered. Invalid blocks are defined as blocks that contain one or more bad bits. Do not erase or program factory-marked bad blocks. Refer to the attached technical notes for a appropriate management of invalid blocks.
2. The 1st block, which is placed on 00h block address, is guaranteed to be a valid block, does not require Error Correction up to 1K Program/Erase cycles.
3. Minimum 1004 valid blocks are guaranteed for each contiguous 128Mb memory space.

AC TEST CONDITION

(K9F12XXU0A-XCB0 :TA=0 to 70°C, K9F12XXU0A-XIB0:TA=-40 to 85°C, K9F12XXU0A : Vcc=2.7V~3.6V unless otherwise noted)

Parameter	K9F12XXU0A
Input Pulse Levels	0.4V to 2.4V
Input Rise and Fall Times	5ns
Input and Output Timing Levels	1.5V
K9F12XXU0A:Output Load (V_{CCQ}:3.0V +/-10%)	1 TTL GATE and CL=50pF
K9F12XXU0A:Output Load (V_{CCQ}:3.3V +/-10%)	1 TTL GATE and CL=100pF

CAPACITANCE(T_A=25°C, V_{CC}=3.3V, f=1.0MHz)

Item	Symbol	Test Condition	Min	Max	Unit
Input/Output Capacitance	$C_{I/O}$	V_{IL}=0V	-	10	pF
Input Capacitance	C_{IN}	V_{IN}=0V	-	10	pF

NOTE : Capacitance is periodically sampled and not 100% tested.

MODE SELECTION

CLE	ALE	$\overline{CE}$	$\overline{WE}$	$\overline{RE}$	$\overline{WP}$	Mode	
H	L	L	↑	H	X	Read Mode	Command Input
L	H	L	↑	H	X		Address Input(4clock)
H	L	L	↑	H	H	Write Mode	Command Input
L	H	L	↑	H	H		Address Input(4clock)
L	L	L	↑	H	H	Data Input	
L	L	L	H	↓	X	Data Output	
L	L	L	H	H	X	During Read(Busy) on K9F1208U0A-Y,P,V,F	
X	X	X	X	H	X	During Read(Busy) on the devices except K9F1208U0A-Y,P,V,F	
X	X	X	X	X	H	During Program(Busy)	
X	X	X	X	X	H	During Erase(Busy)	
X	X(1)	X	X	X	L	Write Protect	
X	X	H	X	X	0V/V_{CC}(2)	Stand-by	

NOTE : 1. X can be V_{IL} or V_{IH}.
2. $\overline{WP}$ should be biased to CMOS high or CMOS low for standby.

PROGRAM / ERASE CHARACTERISTICS

Parameter		Symbol	Min	Typ	Max	Unit
Program Time		t_{PROG}	-	200	500	μs
Dummy Busy Time for Multi Plane Program		t_{DBSY}		1	10	μs
Number of Partial Program Cycles in the Same Page	Main Array	Nop	-	-	1	cycle
	Spare Array		-	-	2	cycles
Block Erase Time		t_{BERS}	-	2	3	ms

NOTE : 1. Typical program time is defined as the time within which more than 50% of the whole pages are programmed at Vcc of 3.3V and temperature of 25°C.

AC TIMING CHARACTERISTICS FOR COMMAND / ADDRESS / DATA INPUT

Parameter	Symbol	Min	Max	Unit
CLE setup Time	t_{CLS}	0	-	ns
CLE Hold Time	t_{CLH}	10	-	ns
$\overline{CE}$ setup Time	t_{CS}	0	-	ns
$\overline{CE}$ Hold Time	t_{CH}	10	-	ns
$\overline{WE}$ Pulse Width	t_{WP}	25(1)	-	ns
ALE setup Time	t_{ALS}	0	-	ns
ALE Hold Time	t_{ALH}	10	-	ns
Data setup Time	t_{DS}	20	-	ns
Data Hold Time	t_{DH}	10	-	ns
Write Cycle Time	t_{WC}	50	-	ns
$\overline{WE}$ High Hold Time	t_{WH}	15	-	ns

NOTE: 1. If tCS is set less than 10ns, tWP must be minimum 35ns, otherwise, tWP may be minimum 25ns.

AC CHARACTERISTICS FOR OPERATION

Parameter	Symbol	Min	Max	Unit
Data Transfer from Cell to Register	t_R	-	12	μs
ALE to $\overline{RE}$ Delay	t_{AR}	10	-	ns
CLE to $\overline{RE}$ Delay	t_{CLR}	10	-	ns
Ready to $\overline{RE}$ Low	t_{RR}	20	-	ns
RE Pulse Width	t_{RP}	25	-	ns
WE High to Busy	t_{WB}	-	100	ns
Read Cycle Time	t_{RC}	50	-	ns
$\overline{RE}$ Access Time	t_{REA}	-	30	ns
$\overline{CE}$ Access Time	t_{CEA}	-	45	ns
$\overline{RE}$ High to Output Hi-Z	t_{RHZ}	-	30	ns
$\overline{CE}$ High to Output Hi-Z	t_{CHZ}	-	20	ns
$\overline{RE}$ or $\overline{CE}$ High to Output hold	t_{OH}	15	-	ns
$\overline{RE}$ High Hold Time	t_{REH}	15	-	ns
Output Hi-Z to $\overline{RE}$ Low	t_{IR}	0	-	ns
$\overline{WE}$ High to $\overline{RE}$ Low	t_{WHR}	60	-	ns
Device resetting time(Read/Program/Erase)	t_{RST}	-	5/10/500(1)	μs

Parameter		Symbol	Min	Max	Unit
K9F1208U0A-Y,P,V,F or K9F1208D0A-Y,P only	Last RE High to Busy(at sequential read)	t_{RB}	-	100	ns
	$\overline{CE}$ High to Ready(in case of interception by $\overline{CE}$ at read)	t_{CRY}	-	50 +tr(R/$\overline{B}$)(3)	ns
	$\overline{CE}$ High Hold Time(at the last serial read)(2)	t_{CEH}	100	-	ns

NOTE: 1. If reset command(FFh) is written at Ready state, the device goes into Busy for maximum 5us.
2. To break the sequential read cycle, $\overline{CE}$ must be held high for longer time than tCEH.
3. The time to Ready depends on the value of the pull-up resistor tied R/$\overline{B}$ pin.

NAND Flash Technical Notes

Initial Invalid Block(s)

Initial invalid blocks are defined as blocks that contain one or more initial invalid bits whose reliability is not guaranteed by Samsung. The information regarding the initial invalid block(s) is so called as the initial invalid block information. Devices with initial invalid block(s) have the same quality level as devices with all valid blocks and have the same AC and DC characteristics. An initial invalid block(s) does not affect the performance of valid block(s) because it is isolated from the bit line and the common source line by a select transistor. The system design must be able to mask out the initial invalid block(s) via address mapping. The 1st block, which is placed on 00h block address, is guaranteed to be a valid block, does not require Error Correction up to 1K program/erase cycles.

Identifying Initial Invalid Block(s)

All device locations are erased(FFh) except locations where the initial invalid block(s) information is written prior to shipping. The initial invalid block(s) status is defined by the 6th byte(X8 device) or 1st word(X16 device) in the spare area. Samsung makes sure that either the 1st or 2nd page of every initial invalid block has non-FFh(X8 device) or non-FFFFh(X16 device) data at the column address of 517(X8 device) or 256 and 261(X16 device). Since the initial invalid block information is also erasable in most cases, it is impossible to recover the information once it has been erased. Therefore, the system must be able to recognize the initial invalid block(s) based on the initial invalid block information and create the initial invalid block table via the following suggested flow chart(Figure 4). Any intentional erasure of the initial invalid block information is prohibited.

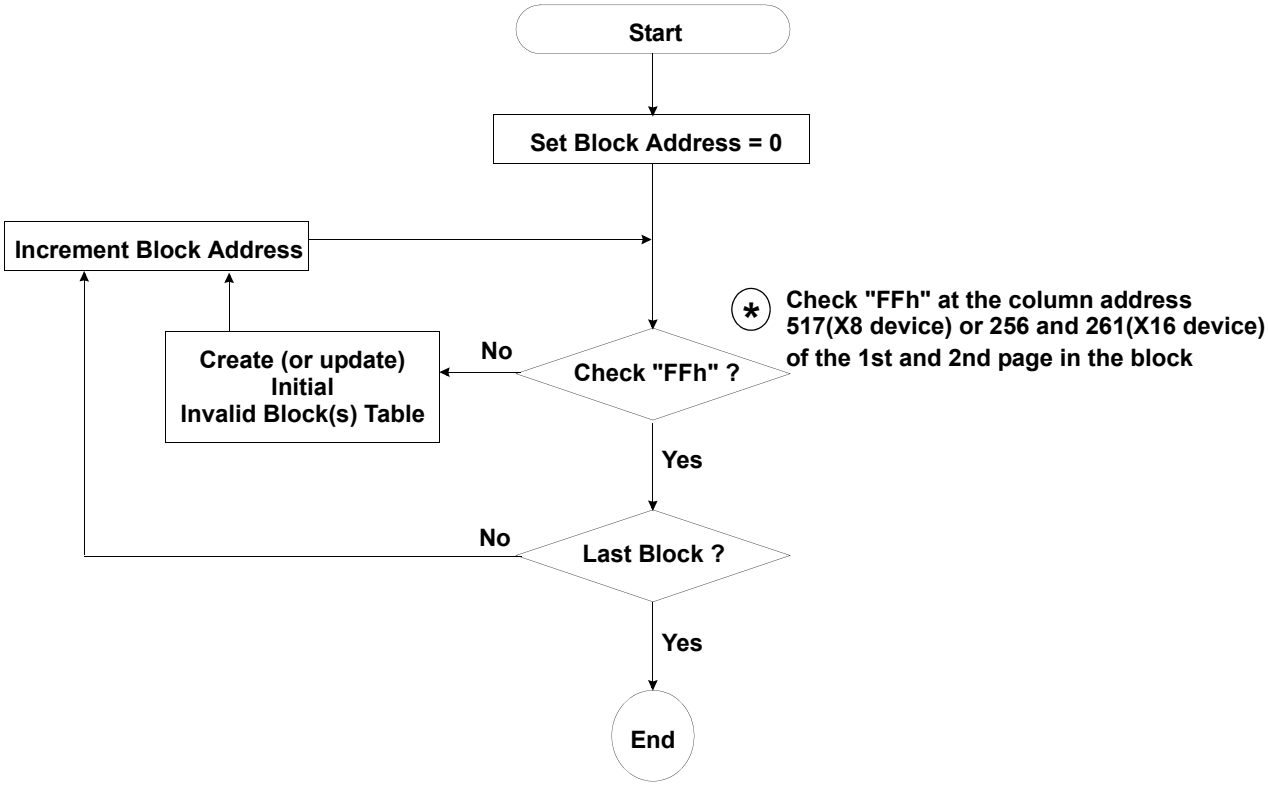

Figure 4. Flow chart to create initial invalid block table.

NAND Flash Technical Notes *(Continued)*

Error in write or read operation

Within its life time, the additional invalid blocks may develop with NAND Flash memory. Refer to the qualification report for the actual data.The following possible failure modes should be considered to implement a highly reliable system. In the case of status read failure after erase or program, block replacement should be done. Because program status fail during a page program does not affect the data of the other pages in the same block, block replacement can be executed with a page-sized buffer by finding an erased empty block and reprogramming the current target data and copying the rest of the replaced block. In case of Read, ECC must be employed. To improve the efficiency of memory space, it is recommended that the read or verification failure due to single bit error be reclaimed by ECC without any block replacement. The said additional block failure rate does not include those reclaimed blocks.

Failure Mode		Detection and Countermeasure sequence
Write	Erase Failure	Status Read after Erase --> Block Replacement
	Program Failure	Status Read after Program --> Block Replacement
Read	Single Bit Failure	Verify ECC -> ECC Correction

ECC : Error Correcting Code --> Hamming Code etc.
Example) 1bit correction & 2bit detection

Program Flow Chart

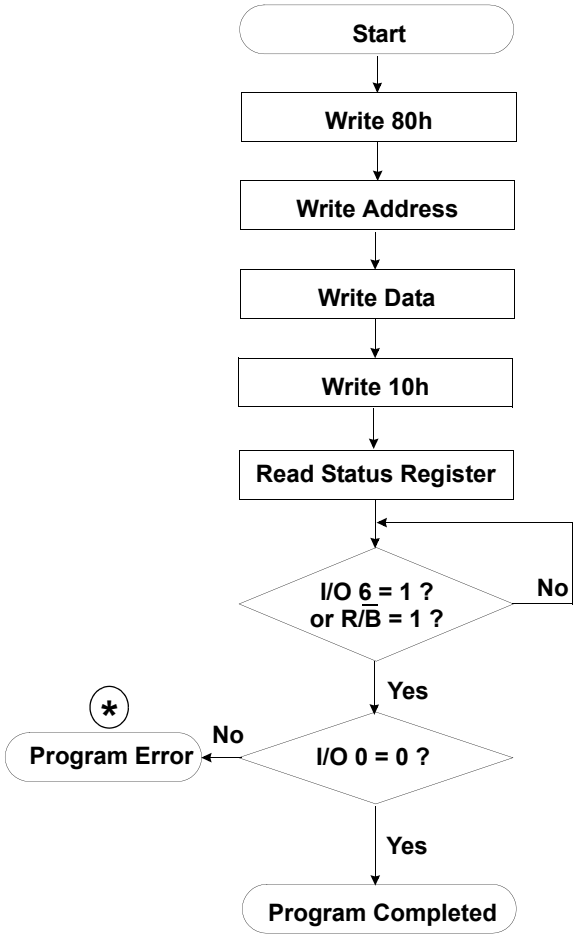

* : If program operation results in an error, map out the block including the page in error and copy the target data to another block.

NAND Flash Technical Notes *(Continued)*

Erase Flow Chart

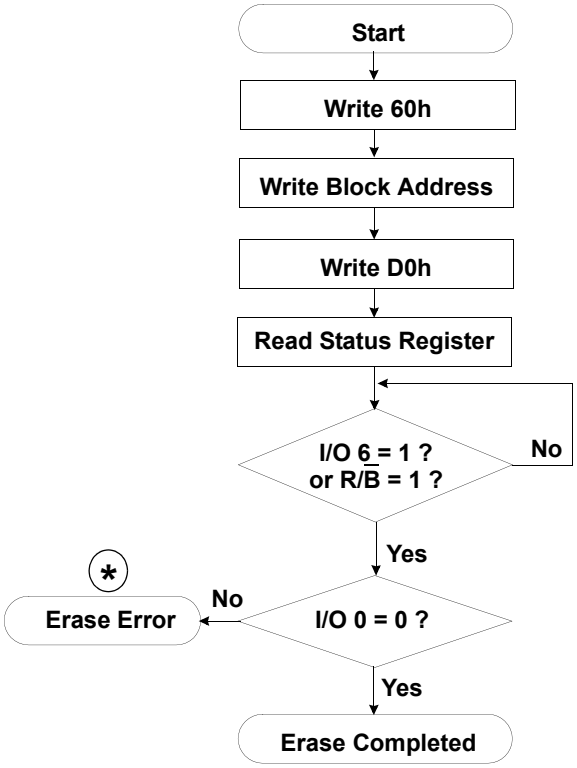

Read Flow Chart

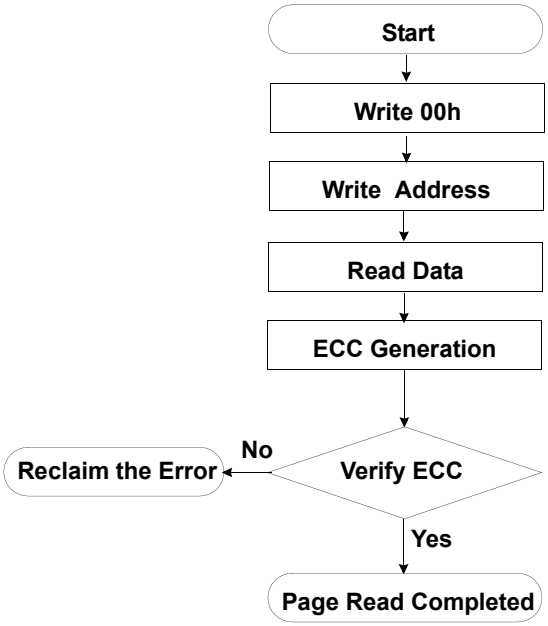

(*) : If erase operation results in an error, map out the failing block and replace it with another block.

Block Replacement

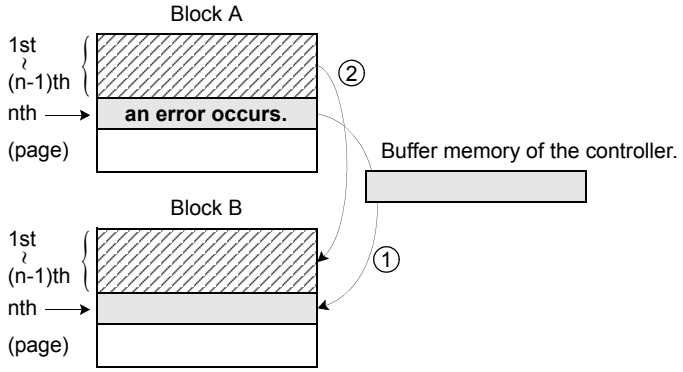

* Step1
When an error happens in the nth page of the Block 'A' during erase or program operation.
* Step2
Copy the nth page data of the Block 'A' in the buffer memory to the nth page of another free block. (Block 'B')
* Step3
Then, copy the data in the 1st ~ (n-1)th page to the same location of the Block 'B'.
* Step4
Do not further erase Block 'A' by creating an 'invalid Block' table or other appropriate scheme.

Pointer Operation of K9F1208X0A(X8)

Samsung NAND Flash has three address pointer commands as a substitute for the two most significant column addresses. '00h' command sets the pointer to 'A' area(0~255byte), '01h' command sets the pointer to 'B' area(256~511byte), and '50h' command sets the pointer to 'C' area(512~527byte). With these commands, the starting column address can be set to any of a whole page(0~527byte). '00h' or '50h' is sustained until another address pointer command is inputted. '01h' command, however, is effective only for one operation. After any operation of Read, Program, Erase, Reset, Power_Up is executed once with '01h' command, the address pointer returns to 'A' area by itself. To program data starting from 'A' or 'C' area, '00h' or '50h' command must be inputted before '80h' command is written. A complete read operation prior to '80h' command is not necessary. To program data starting from 'B' area, '01h' command must be inputted right before '80h' command is written.

Table 2. Destination of the pointer

Command	Pointer position	Area
00h	0 ~ 255 byte	1st half array(A)
01h	256 ~ 511 byte	2nd half array(B)
50h	512 ~ 527 byte	spare array(C)

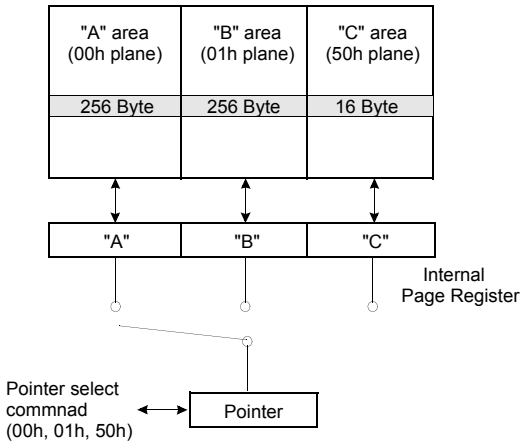

Figure 5. Block Diagram of Pointer Operation

(1) Command input sequence for programming 'A' area

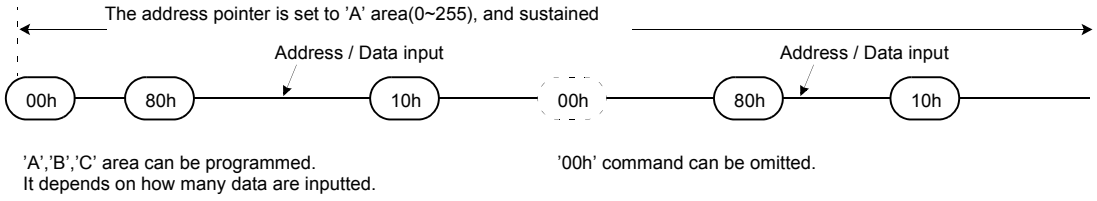

(2) Command input sequence for programming 'B' area

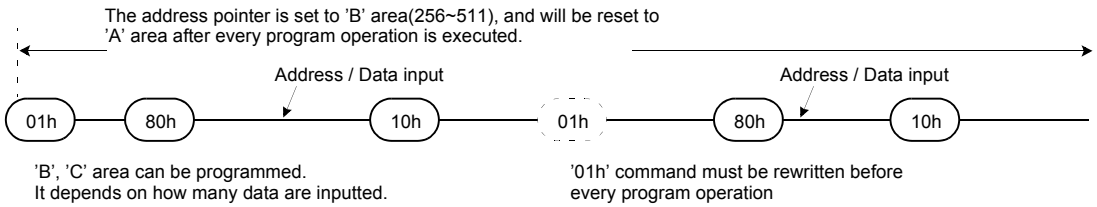

(3) Command input sequence for programming 'C' area

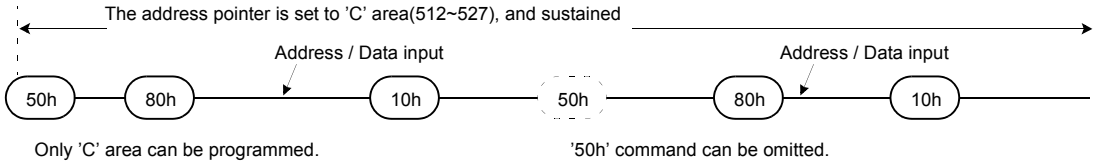

Pointer Operation of K9F1216X0A(X16)

Samsung NAND Flash has two address pointer commands as a substitute for the most significant column address. '00h' command sets the pointer to 'A' area(0~255word), and '50h' command sets the pointer to 'B' area(256~263word). With these commands, the starting column address can be set to any of a whole page(0~263word). '00h' or '50h' is sustained until another address pointer command is inputted. To program data starting from 'A' or 'B' area, '00h' or '50h' command must be inputted before '80h' command is written. A complete read operation prior to '80h' command is not necessary.

Table 3. Destination of the pointer

Command	Pointer position	Area
00h	0 ~ 255 word	main array(A)
50h	256 ~ 263 word	spare array(B)

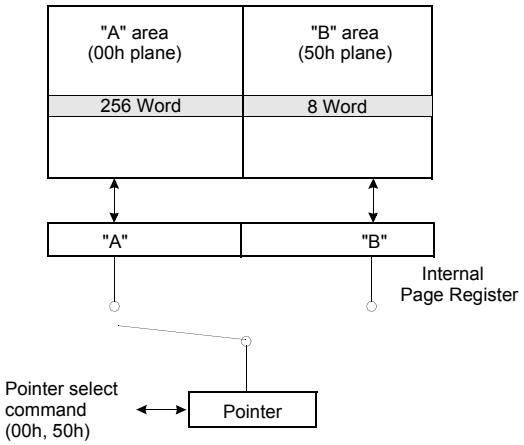

Figure 6. Block Diagram of Pointer Operation

(1) Command input sequence for programming 'A' area

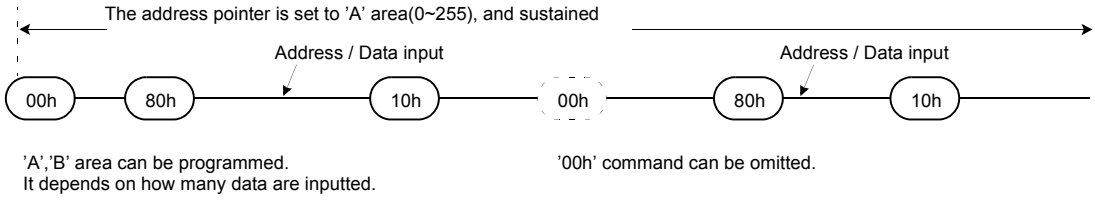

(2) Command input sequence for programming 'B' area

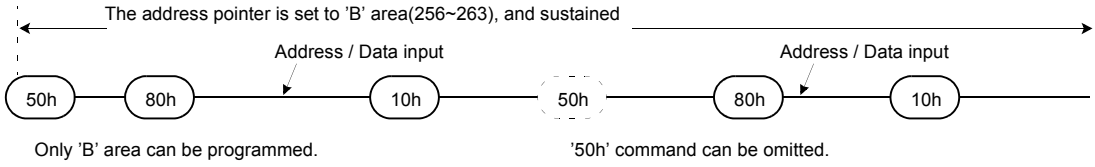

System Interface Using $\overline{CE}$ don't-care.

For an easier system interface, $\overline{CE}$ may be inactive during the data-loading or sequential data-reading as shown below. The internal 528byte 1264word page registers are utilized as separate buffers for this operation and the system design gets more flexible. In addition, for voice or audio applications which use slow cycle time on the order of u-seconds, de-activating $\overline{CE}$ during the data-loading and reading would provide significant savings in power consumption.

Figure 7. Program Operation with $\overline{CE}$ don't-care.

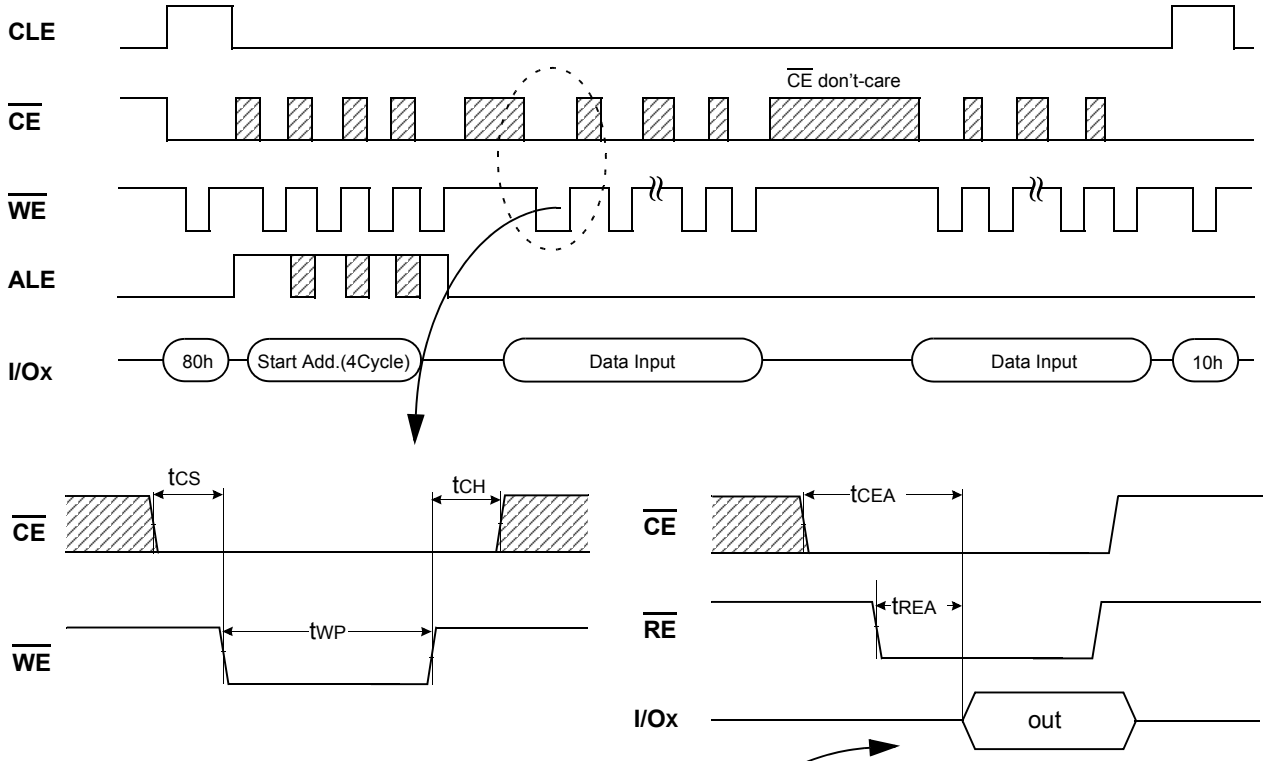

Figure 8. Read Operation with $\overline{CE}$ don't-care.

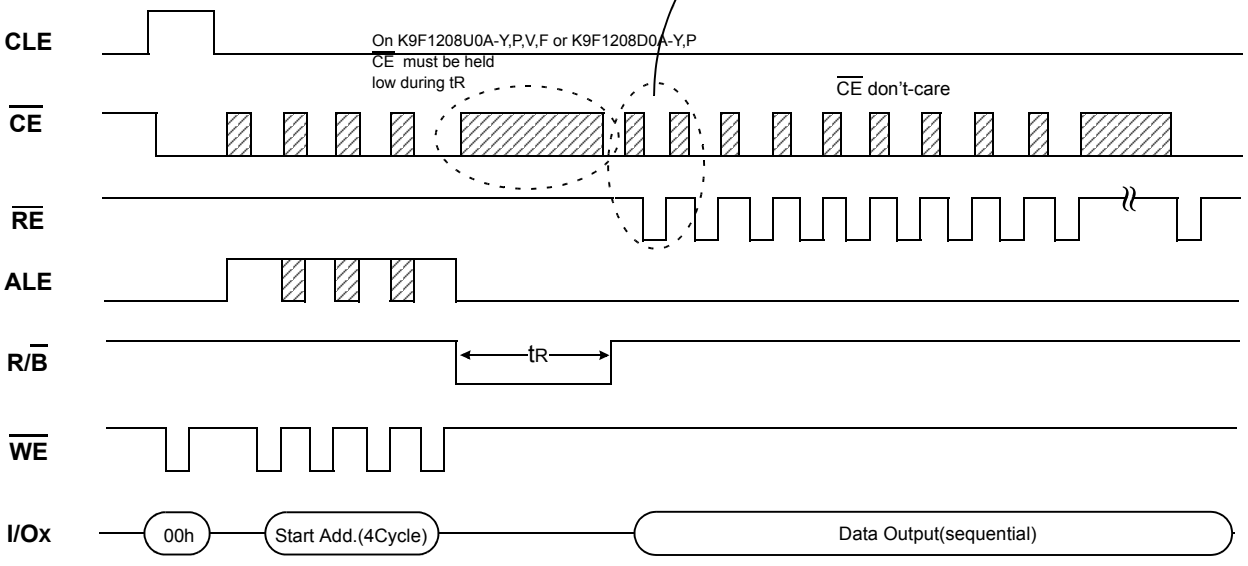

Device	I/O	DATA
	I/Ox	Data In/Out
K9F1208X0A(X8 device)	I/O 0 ~ I/O 7	~528byte
K9F1216X0A(X16 device)	I/O 0 ~ I/O 15[1)]	~264word

NOTE: 1. I/O8~15 must be set to "0" during command or address input.
I/O8~15 are used only for data bus.

Command Latch Cycle

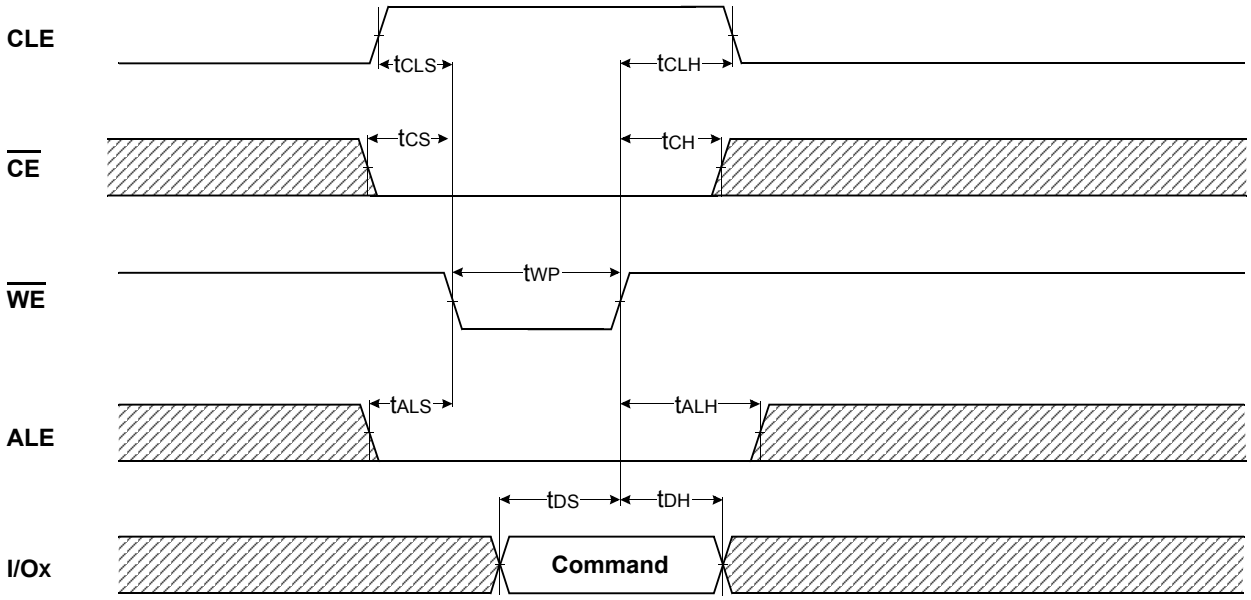

Address Latch Cycle

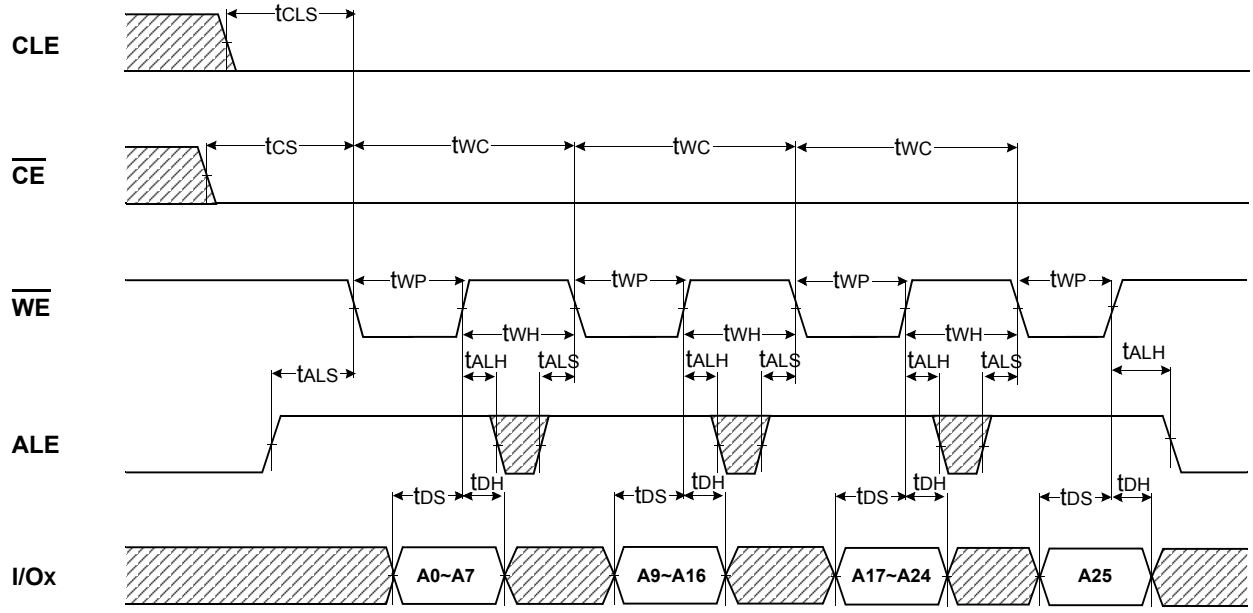

Input Data Latch Cycle

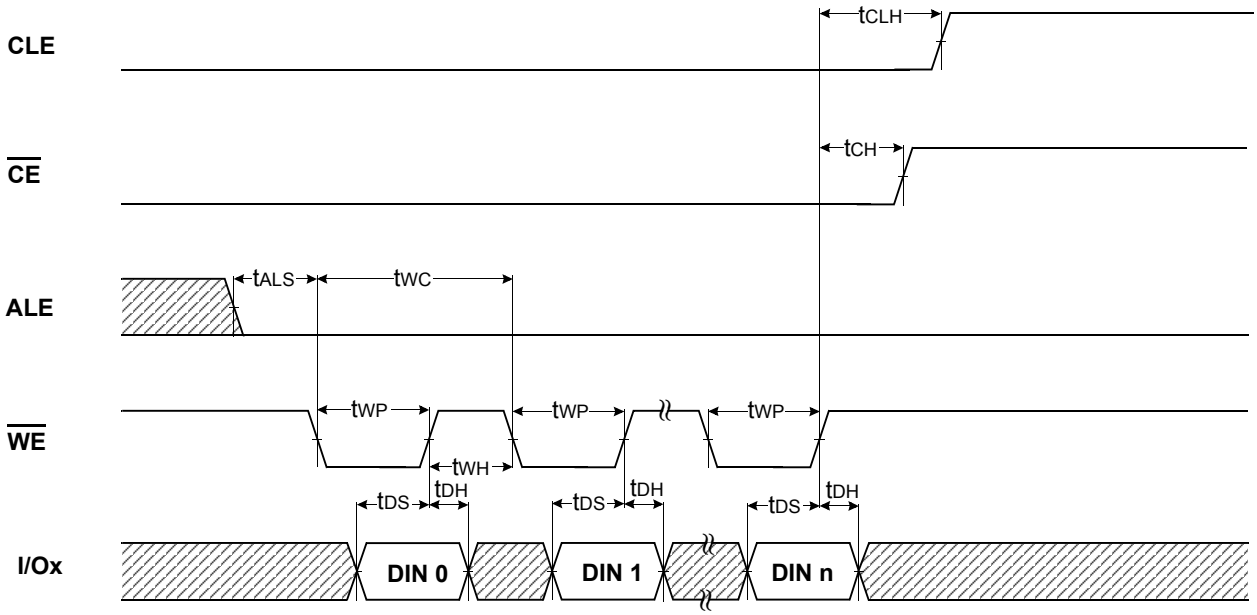

Serial access Cycle after Read(CLE=L, $\overline{WE}$=H, ALE=L)

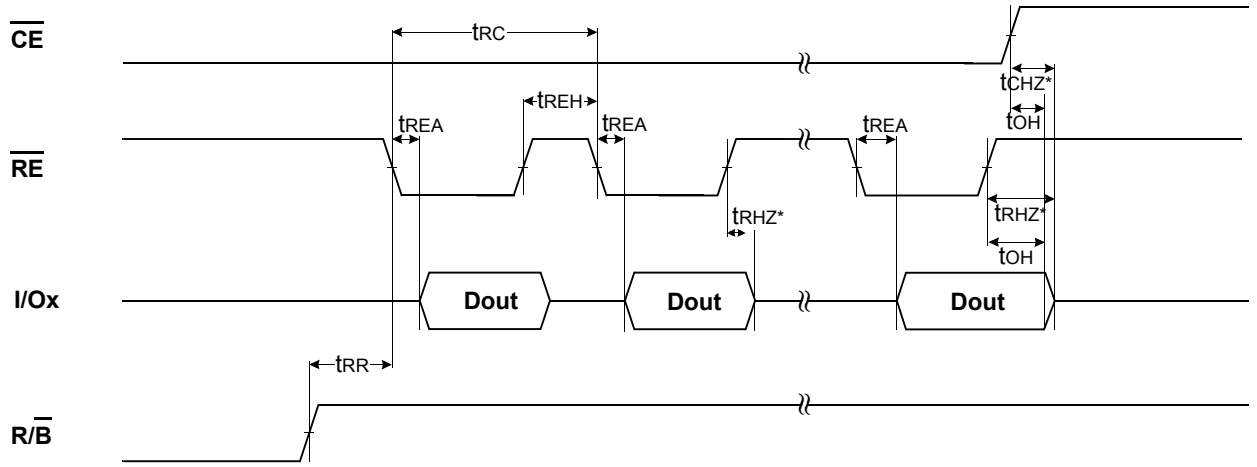

NOTES : Transition is measured ±200mV from steady state voltage with load.
This parameter is sampled and not 100% tested.

Status Read Cycle

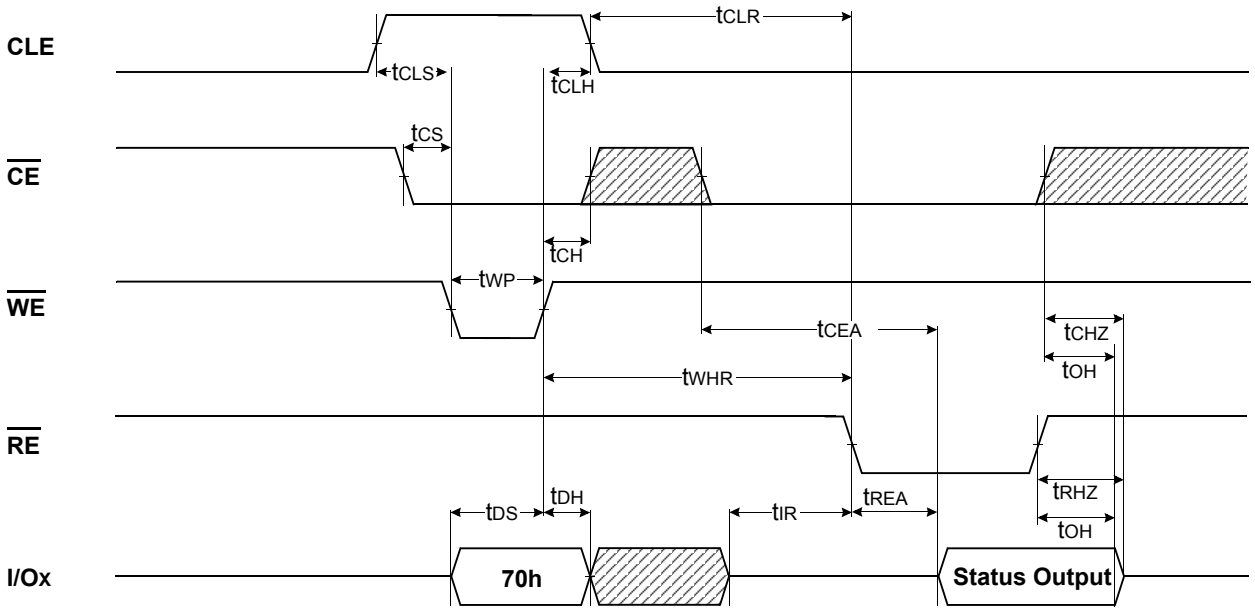

READ1 OPERATION (READ ONE PAGE)

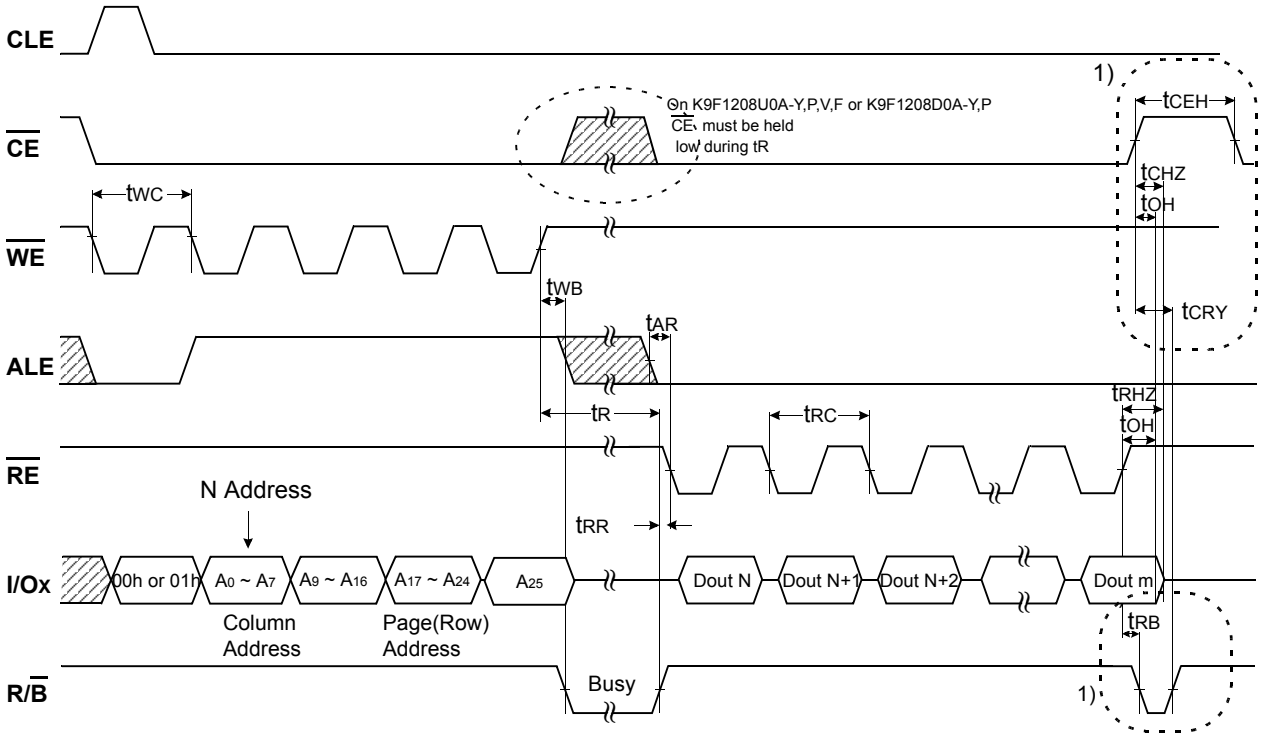

X8 device : m = 528 , Read CMD = 00h or 01h
X16 device : m = 264 , Read CMD = 00h

NOTES : 1) is only valid on K9F1208U0A-Y,P,V,F or K9F1208D0A-Y,P

Read1 Operation (Intercepted by $\overline{CE}$)

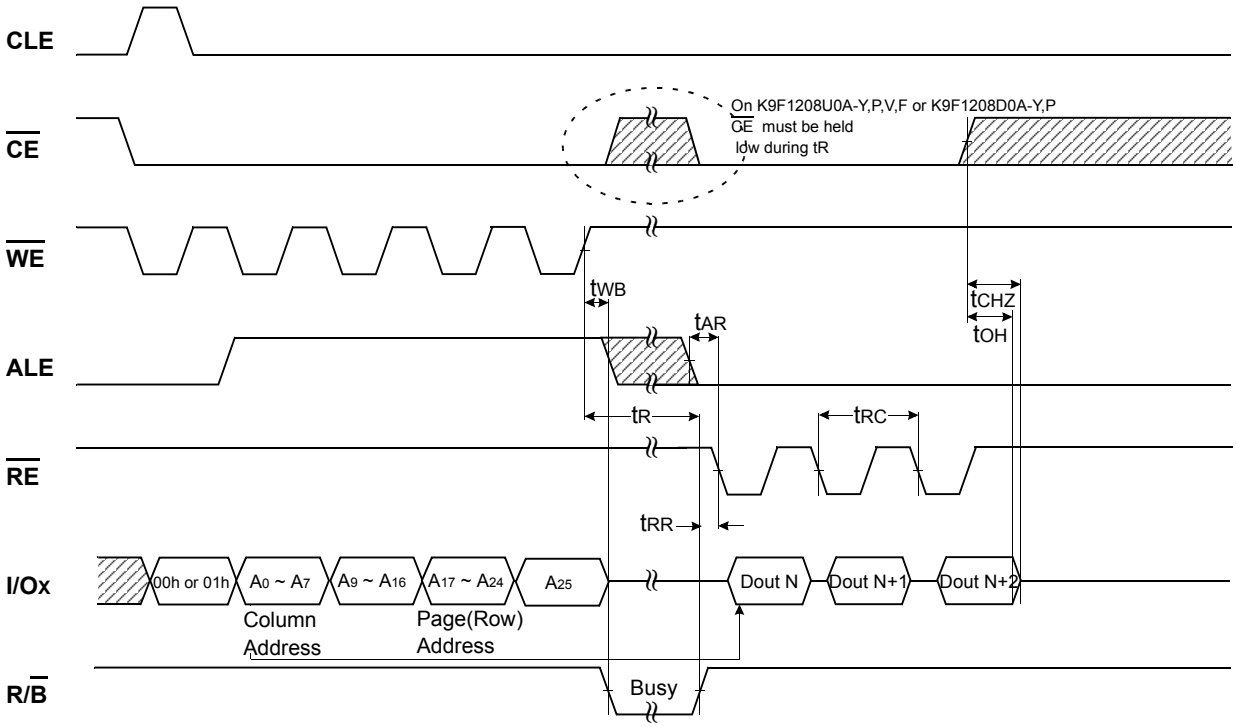

Read2 Operation (Read One Page)

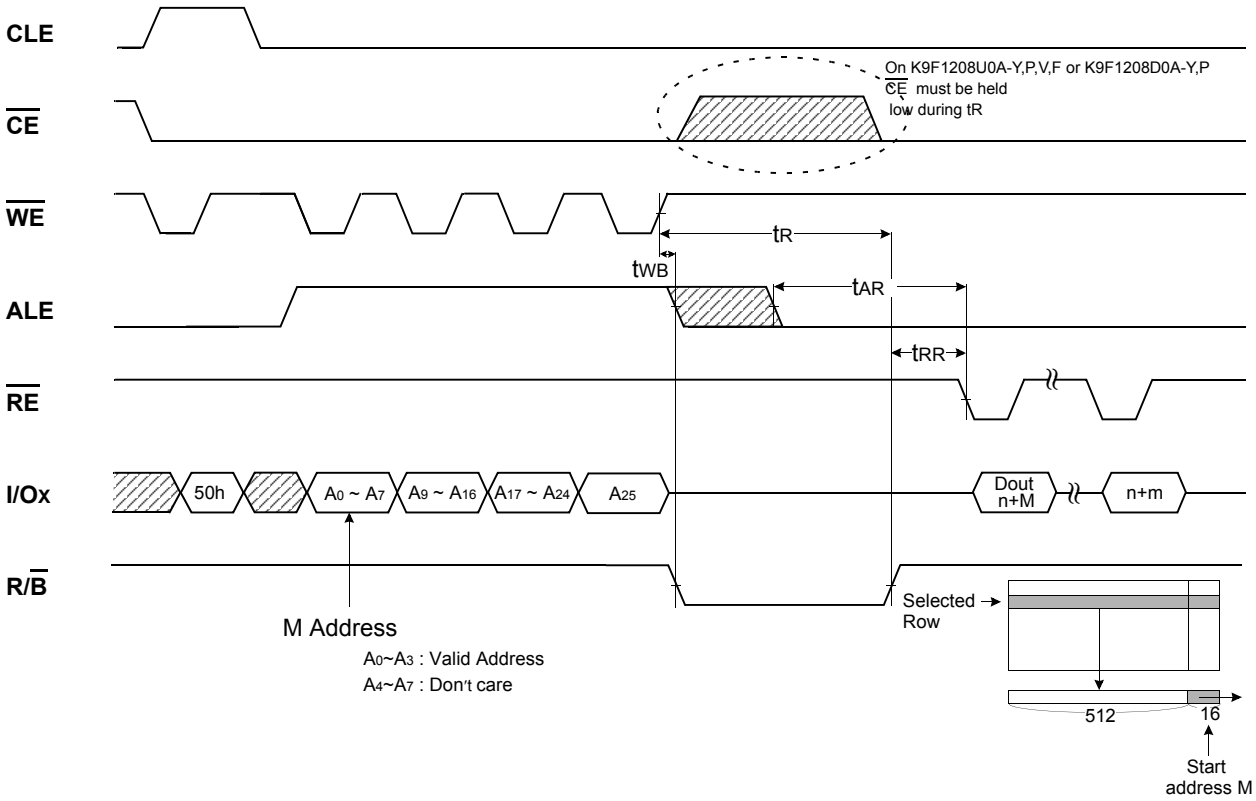

Sequential Row Read Operation (Within a Block)

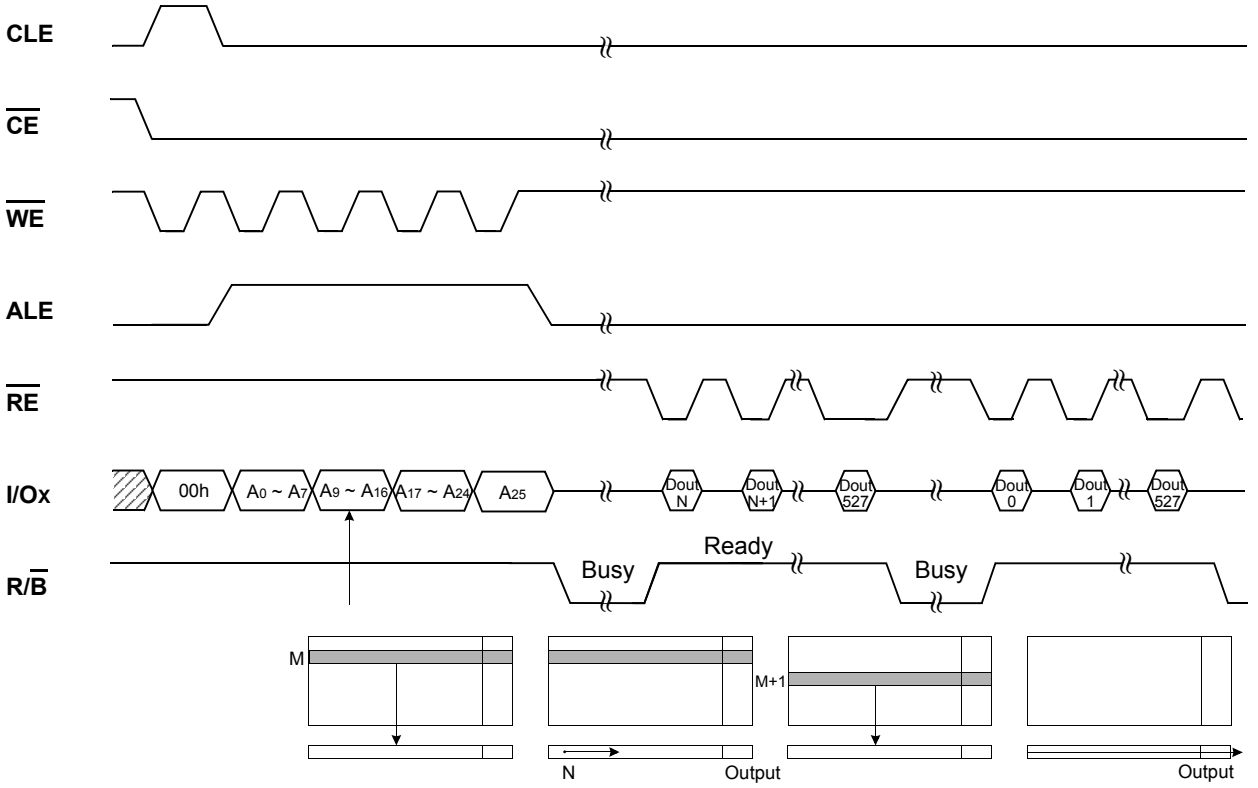

Page Program Operation

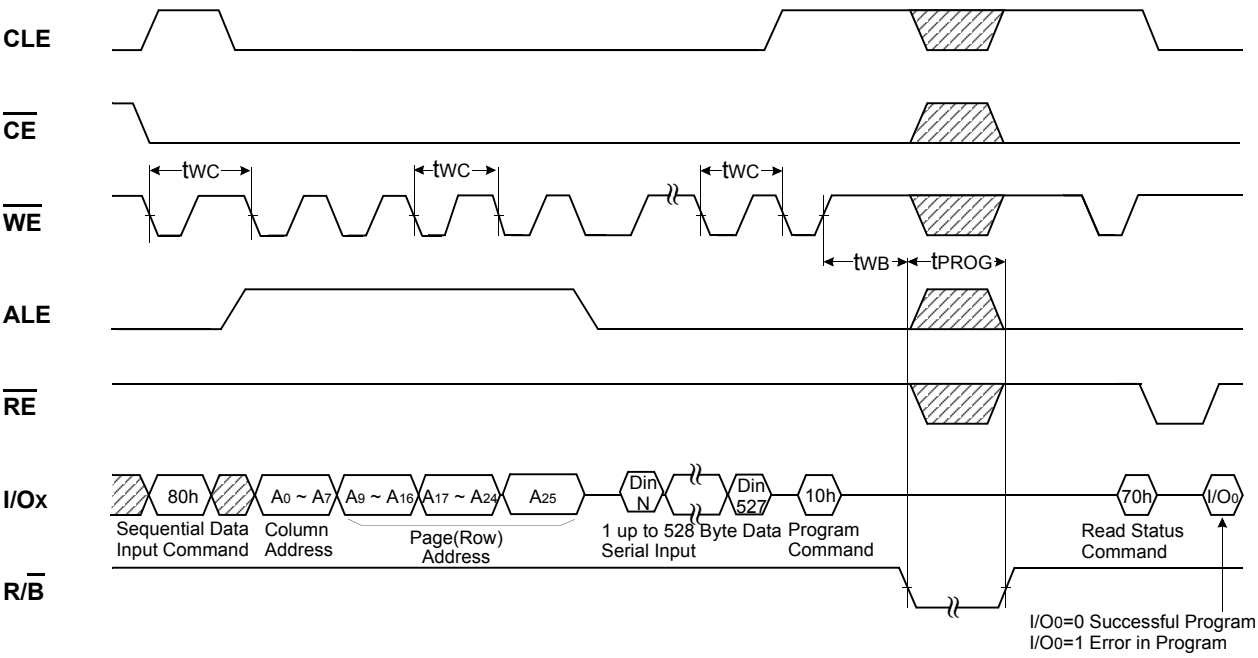

BLOCK ERASE OPERATION (ERASE ONE BLOCK)

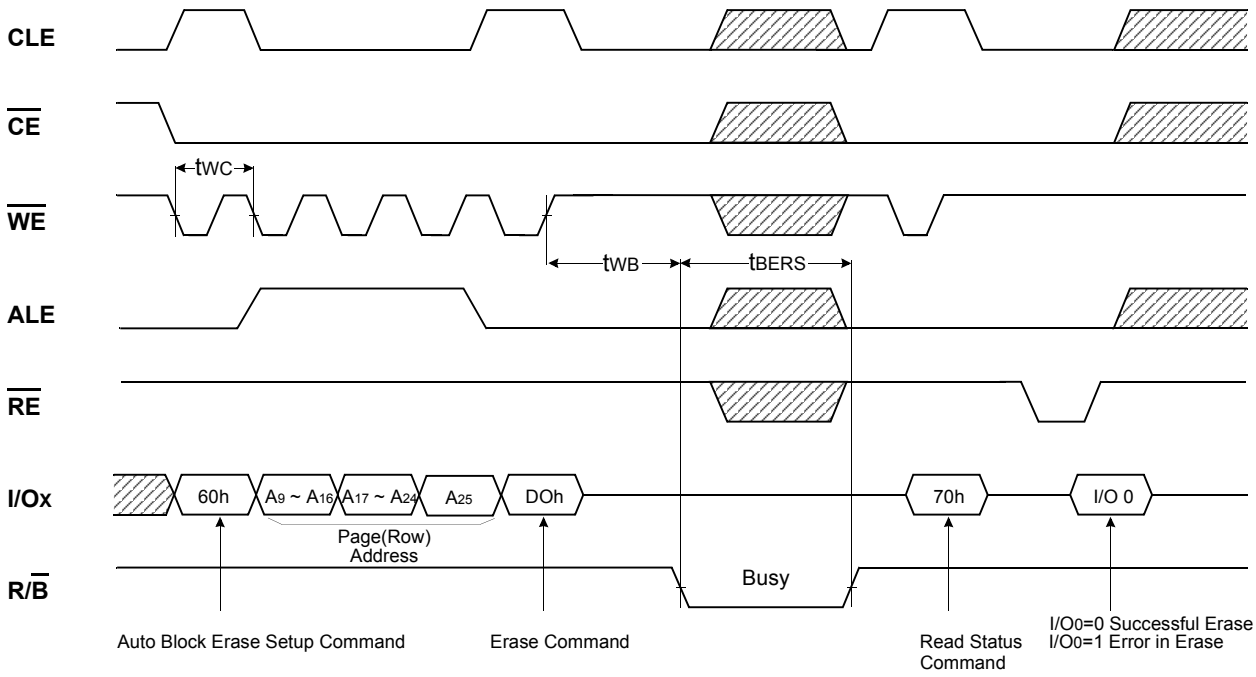

Multi-Plane Page Program Operation

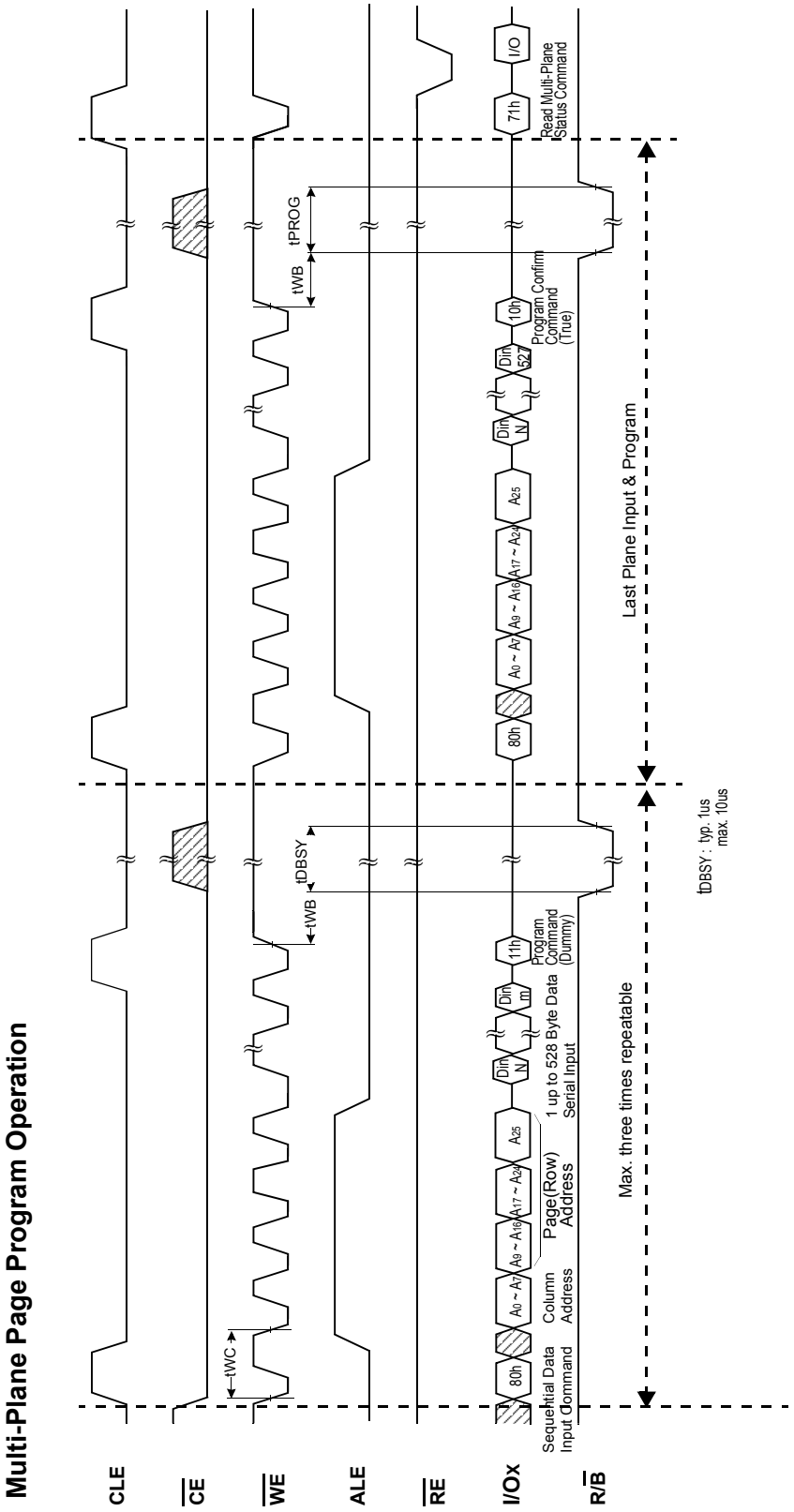

Ex.) Four-Plane Page Program

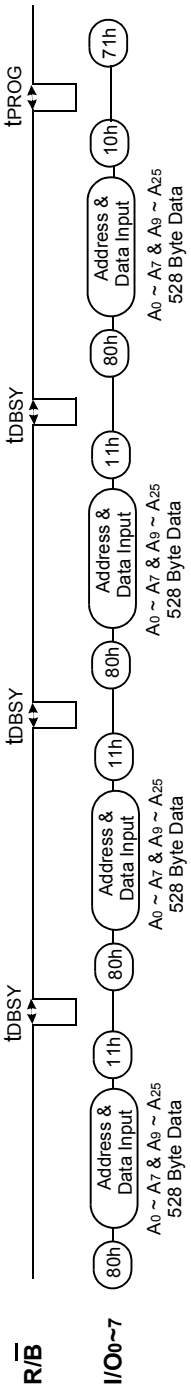

Multi-Plane Block Erase Operation

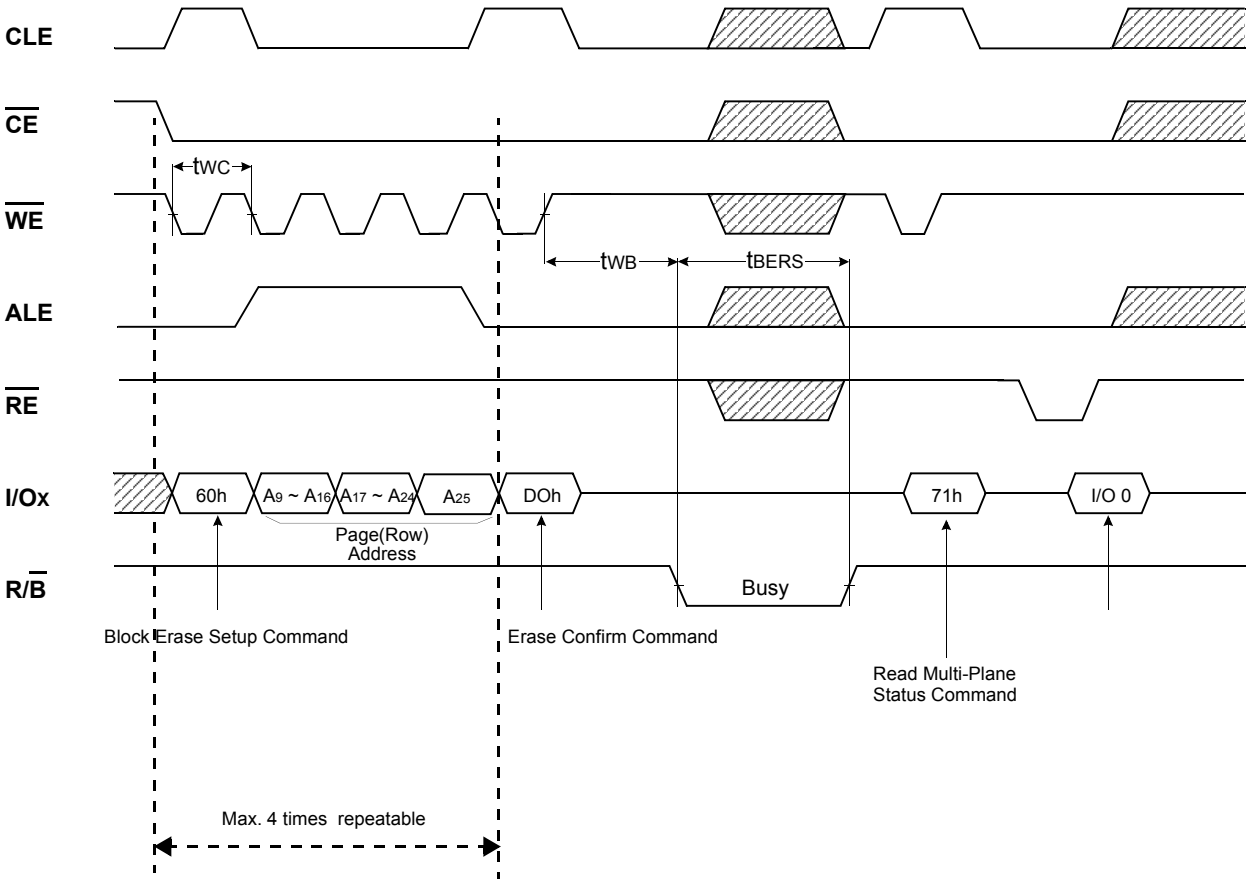

* For Multi-Plane Erase operation, Block address to be erased should be repeated before "D0H" command.

Ex.) Four-Plane Block Erase Operation

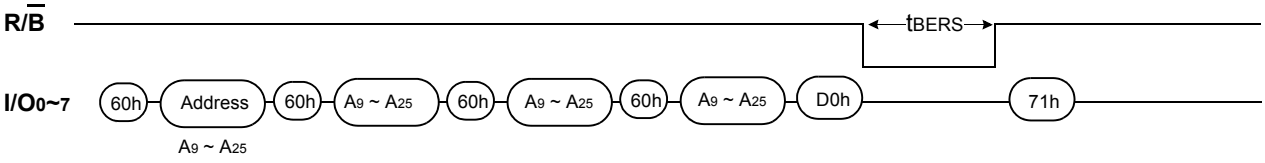

Read ID Operation

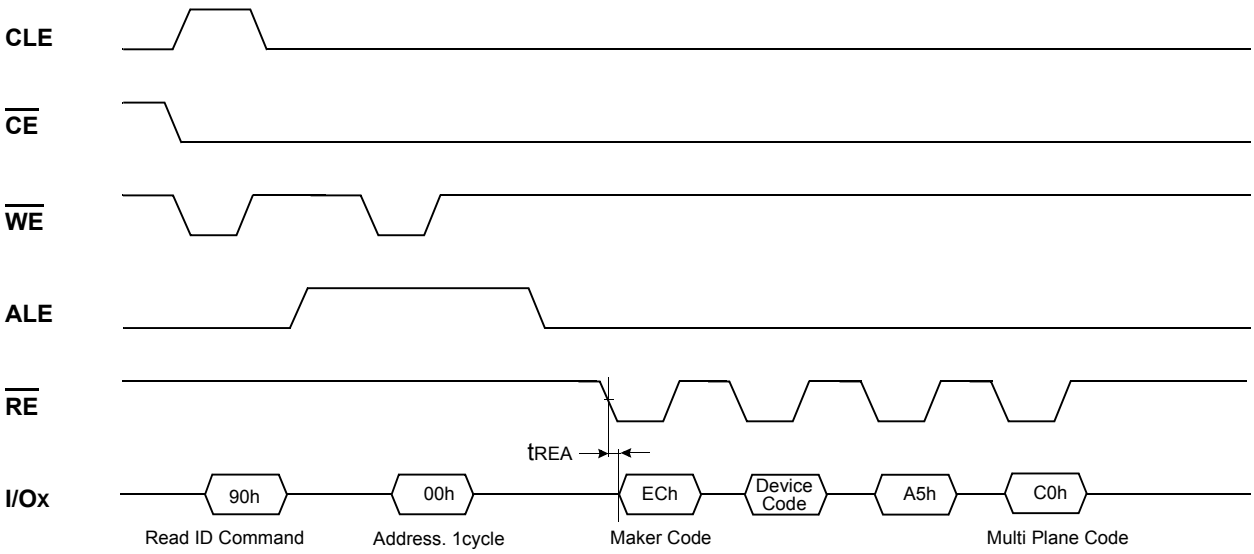

Device	Device Code
K9F1208D0A	76h
K9F1208U0A	76h
K9F1216D0A	XX56h
K9F1216U0A	XX56h

ID Defintition Table

90 ID : Access command = 90H

	Description
1st Byte	Maker Code
2nd Byte	Device Code
3rd Byte	Must be don't -cared
4th Byte	**Supports Multi Plane Operation**

Copy-Back Program Operation

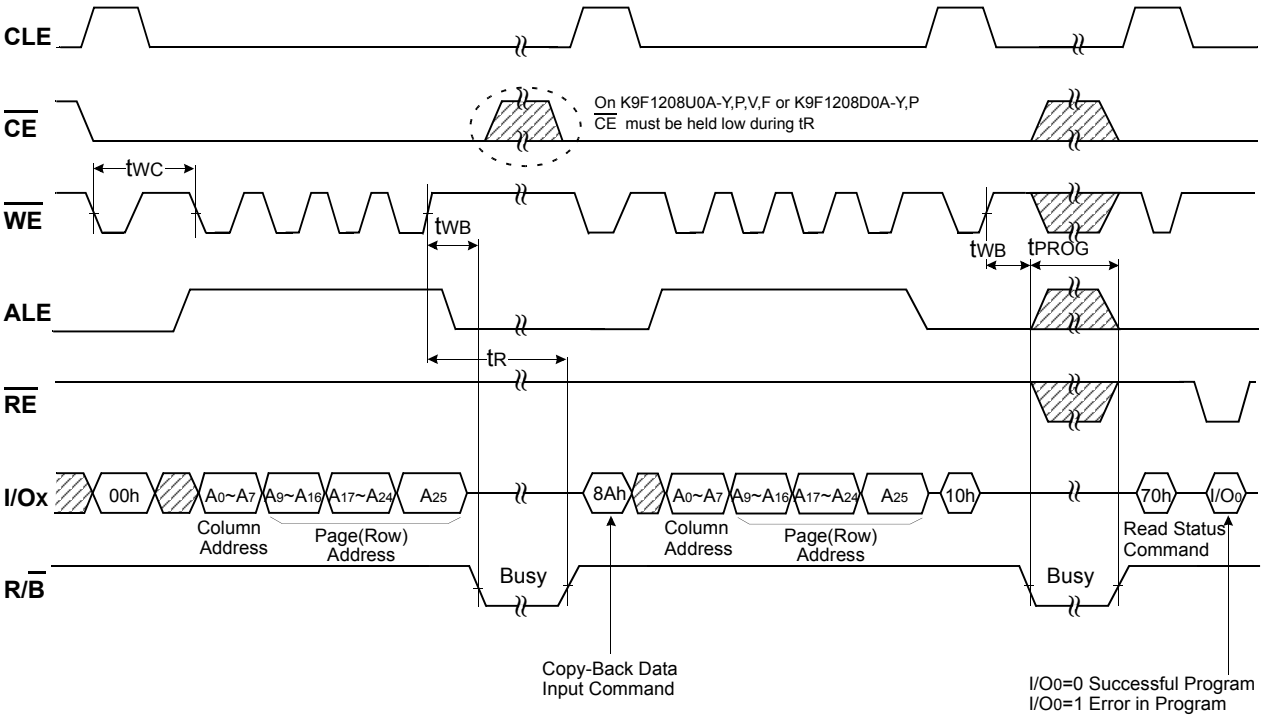

Device Operation

PAGE READ

Upon initial device power up, the device defaults to Read1 mode. This operation is also initiated by writing 00h to the command register along with four address cycles. Once the command is latched, it does not need to be written for the following page read operation. Three types of operations are available : random read, serial page read and sequential row read.

The random read mode is enabled when the page address is changed. The 528 bytes(x8 device) or 264words(x16 device)of data within the selected page are transferred to the data registers in less than 12μs(t_R). The system controller can detect the completion of this data transfer(tR) by analyzing the output of R/$\overline{B}$ pin. $\overline{CE}$ must be held low while in busy for K9F12XXU0A-YXB0 or K9F1208U0A-VXB0, while $\overline{CE}$ is don't-care with K9F12XXU0A-DXB0. If $\overline{CE}$ goes high before the device returns to Ready, the random read operation is interrupted and Busy returns to Ready as the defined by tCRY. Since the operation was aborted, the serial page read does not output valid data. Once the data in a page is loaded into the registers, they may be read out in 50ns cycle time by sequentially pulsing $\overline{RE}$. High to low transitions of the $\overline{RE}$ clock output the data stating from the selected column address up to the last column address.

The way the Read1 and Read2 commands work is like a pointer set to either the main area or the spare area. The spare area of 512 to 527 bytes (x8 device) or 256 to 263 words(x16 device)may be selectively accessed by writing the Read2 command. Addresses A_0 to A_3 set the starting address of the spare area while addresses A_4 to A_7 are ignored. The Read1 command(00h/01h) is needed to move the pointer back to the main area. Figures 7 to 10 show typical sequence and timings for each read operation.

Sequential Row Read is available only on K9F1208U0A-Y,P,V,F or K9F1208D0A-Y,P :

After the data of last column address is clocked out, the next page is automatically selected for sequential row read. Waiting 10μs again allows reading the selected page. The sequential row read operation is terminated by bringing $\overline{CE}$ high. Unless the operation is aborted, the page address is automatically incremented for sequential row read as in Read1 operation and spare sixteen bytes of each page may be sequentially read. The Sequential Read 1 and 2 operation is allowed only within a block and after the last page of a block is readout, the sequential read operation must be terminated by bringing $\overline{CE}$ high. When the page address moves onto the next block, read command and address must be given. Figures 9, 10 show typical sequence and timings for sequential row read operation.

Figure 7. Read1 Operation

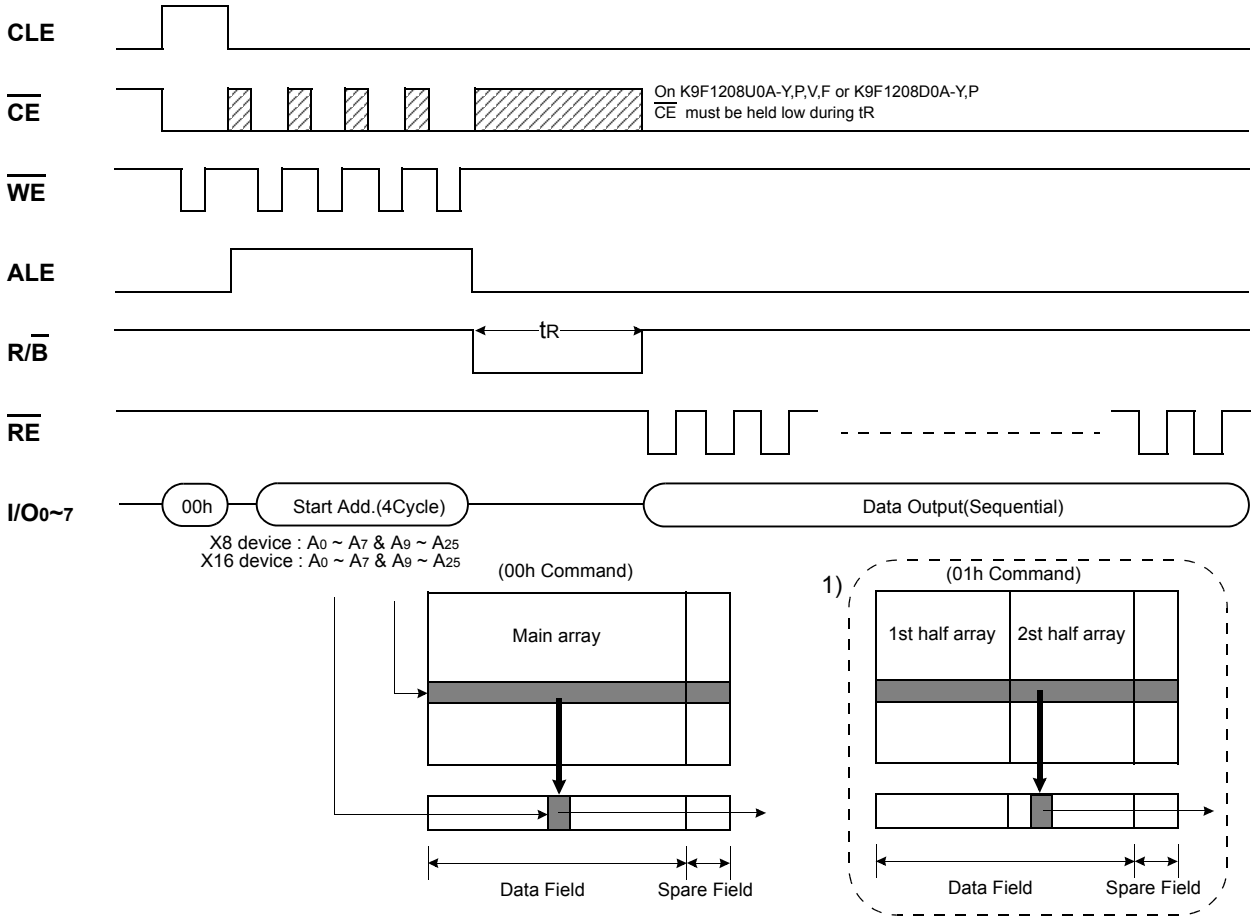

NOTE: 1) After data access on 2nd half array by 01h command, the start pointer is automatically moved to 1st half array (00h) at next cycle. 01h command is only available on X8 device(K9F1208X0A).

Figure 8. Read2 Operation

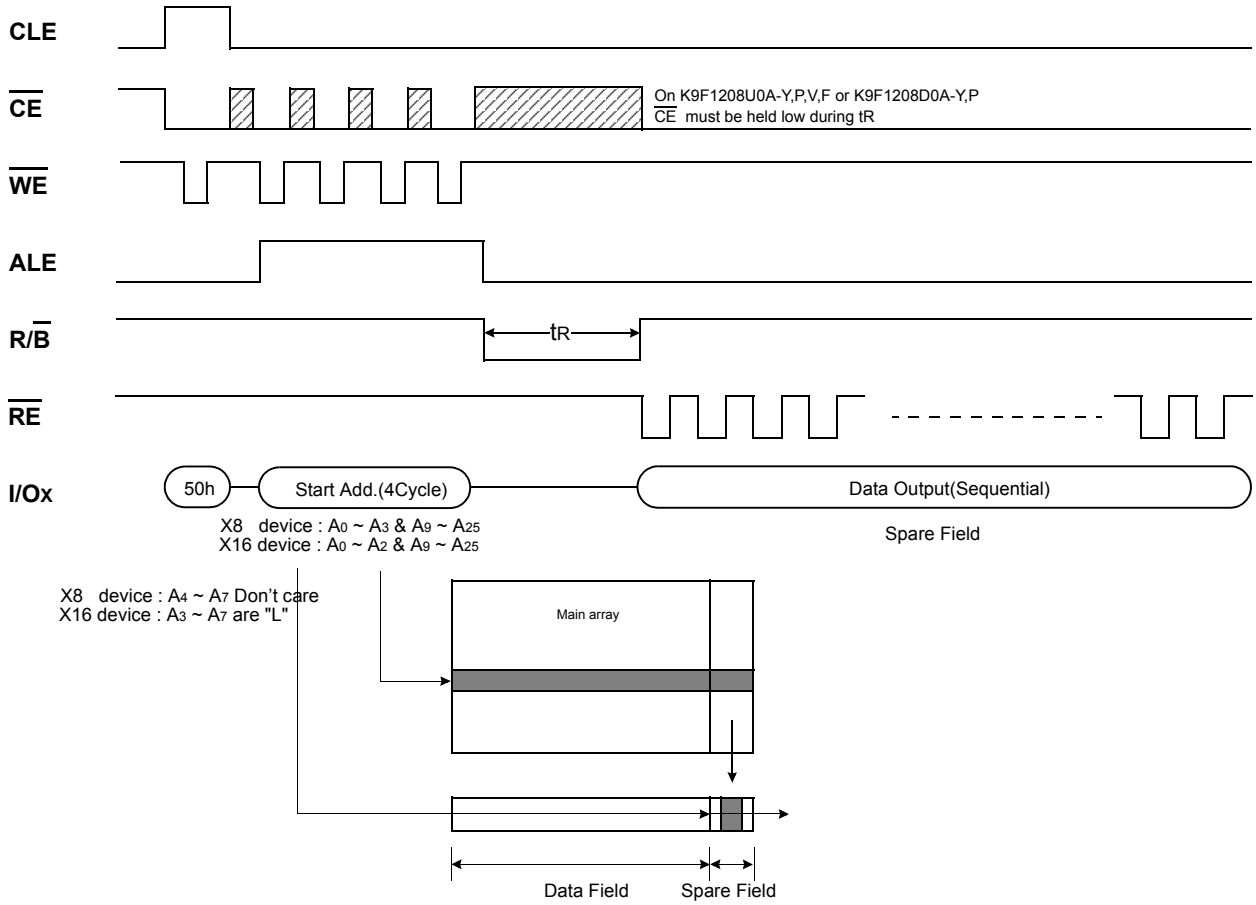

Figure 9. Sequential Row Read1 Operation (only for K9F1208U0A-Y,P,V,F or K9F1208D0A-Y,P valid within a block)

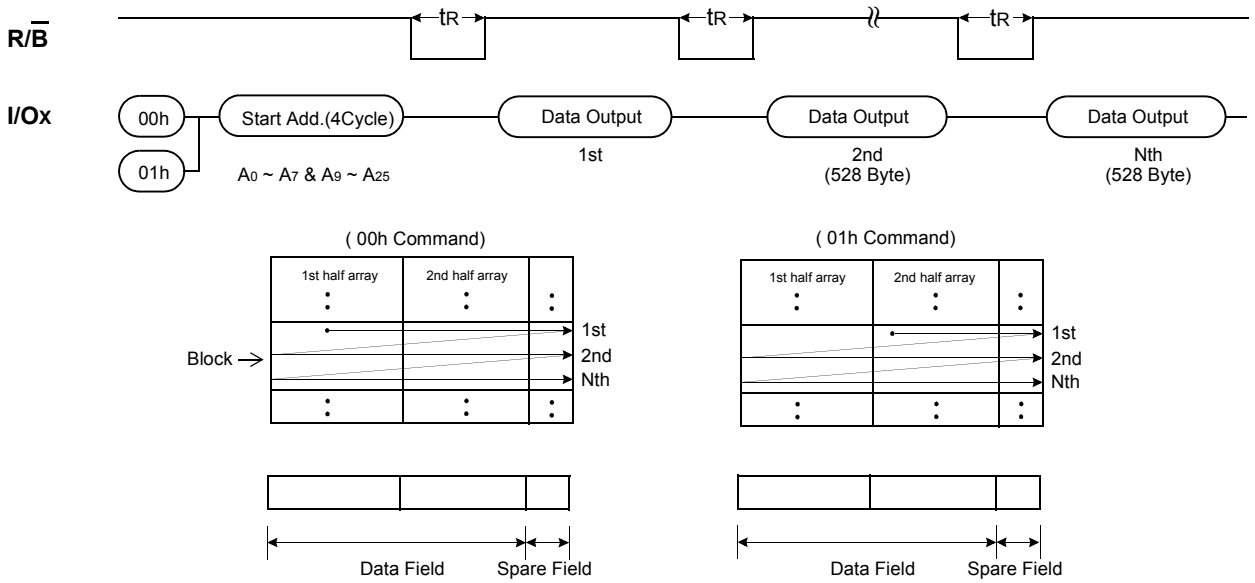

The Sequential Read 1 and 2 operation is allowed only within a block and after the last page of a block is read-out, the sequential read operation must be terminated by bringing $\overline{CE}$ high. When the page address moves onto the next block, read command and address must be given.

Figure 10. Sequential Row Read2 Operation (only for K9F1208U0A-Y,P,V,F or K9F1208D0A-Y,P valid within a block)

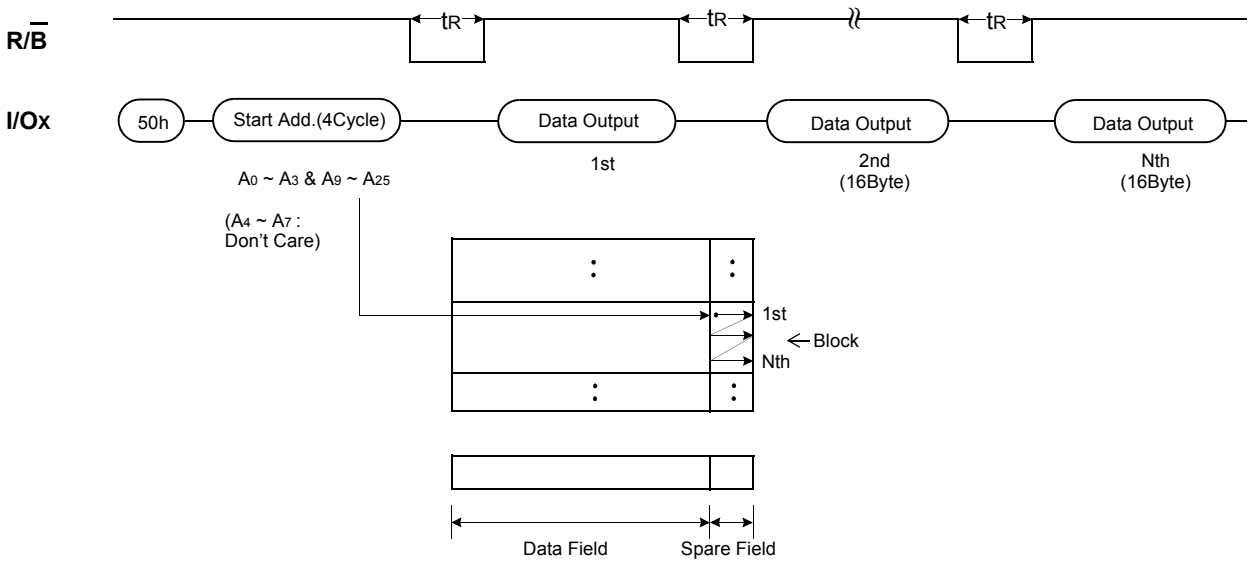

PAGE PROGRAM

The device is programmed basically on a page basis, but it does allow multiple partial page programing of a byte or consecutive bytes up to 528 bytes(x8 device) or 264words(x16 device), in a single page program cycle. The number of consecutive partial page programming operation within the same page without an intervening erase operation must not exceed 1 for main array and 2 for spare array. The addressing may be done in any random order in a block. A page program cycle consists of a serial data loading period in which up to 528 bytes(x8 device) or 264words(x16 device) of data may be loaded into the page register, followed by a non-volatile programming period where the loaded data is programmed into the appropriate cell. Serial data loading can be started from 2nd half array by moving pointer. About the pointer operation, please refer to the attached technical notes.

The serial data loading period begins by inputting the Serial Data Input command(80h), followed by the four cycle address input and then serial data loading. The bytes other than those to be programmed do not need to be loaded.The Page Program confirm command(10h) initiates the programming process. Writing 10h alone without previously entering the serial data will not initiate the programming process. The internal write state control automatically executes the algorithms and timings necessary for program and verify, thereby freeing the system controller for other tasks. Once the program process starts, the Read Status Register command may be entered, with $\overline{RE}$ and $\overline{CE}$ low, to read the status register. The system controller can detect the completion of a program cycle by monitoring the R/$\overline{B}$ output, or the Status bit(I/O 6) of the Status Register. Only the Read Status command and Reset command are valid while programming is in progress. When the Page Program is complete, the Write Status Bit(I/O 0) may be checked(Figure 11). The internal write verify detects only errors for "1"s that are not successfully programmed to "0"s. The command register remains in Read Status command mode until another valid command is written to the command register.

Figure 11. Program & Read Status Operation

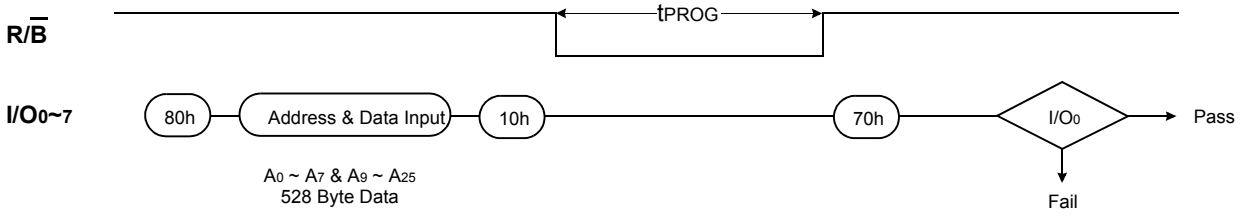

BLOCK ERASE

The Erase operation is done on a block(16K Byte) basis. Block address loading is accomplished in three cycles initiated by an Erase Setup command(60h). Only address A_{14} to A_{25} is valid while A_9 to A_{13} is ignored. The Erase Confirm command(D0h) following the block address loading initiates the internal erasing process. This two-step sequence of setup followed by execution command ensures that memory contents are not accidentally erased due to external noise conditions.
At the rising edge of $\overline{WE}$ after the erase confirm command input, the internal write controller handles erase and erase-verify. When the erase operation is completed, the Write Status Bit(I/O 0) may be checked. Figure 12 details the sequence.

Figure 12. Block Erase Operation

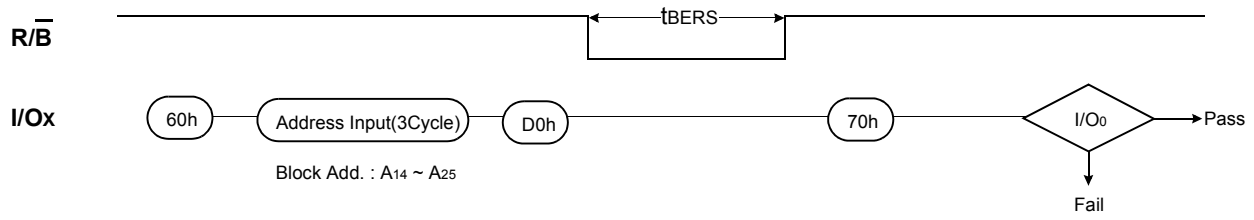

Multi-Plane Page Program

Multi-Plane Page Program is an extension of Page Program, which is executed for a single plane with 528 byte page registers. Since the device is equipped with four memory planes, activating the four sets of 528 byte page registers enables a simultaneous programming of four pages. Partial activation of four planes is also permitted.

After writing the first set of data up to 528 byte into the selected page register, Dummy Page Program command (11h) instead of actual Page Program (10h) is inputted to finish data-loading of the current plane and move to the next plane. Since no programming process is involved, R/$\overline{B}$ remains in Busy state for a short period of time(tDBSY). Read Status command (standard 70h or alternate 71h) may be issued to find out when the device returns to Ready state by polling the Ready/Busy status bit(I/O 6). Then the next set of data for one of the other planes is inputted with the same command and address sequences. After inputting data for the last plane, actual True Page Program (10h) instead of dummy Page Program command (11h) must be followed to start the programming process. The operation of R/$\overline{B}$ and Read Status is the same as that of Page Program. Since maximum four pages are programmed simultaneously, pass/fail status is available for each page when the program operation completes. The extended status bits (I/O1 through I/O 4) are checked by inputting the Read Multi-Plane Status Register. Status bit of I/O 0 is set to "1" when any of the pages fails. Multi-Plane page Program with "01h" pointer is not supported, thus prohibited.

Figure 13. Four-Plane Page Program

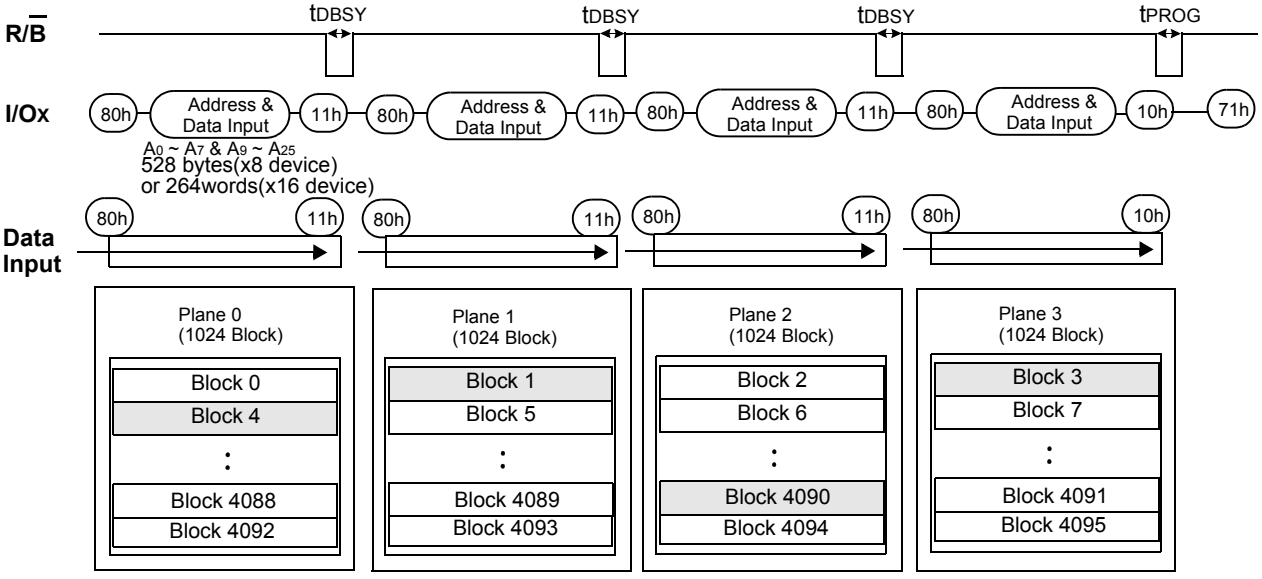

Restriction in addressing with Multi Plane Page Program

While any block in each plane may be addressable for Multi-Plane Page Program, the five least significant addresses(A9-A13) for the selected pages at one operation must be the same. Figure 14 shows an example where 2nd page of each addressed block is selected for four planes. However, any arbitrary sequence is allowed in addressing multiple planes as shown in Figure15.

Figure 14. Multi-Plane Program & Read Status Operation

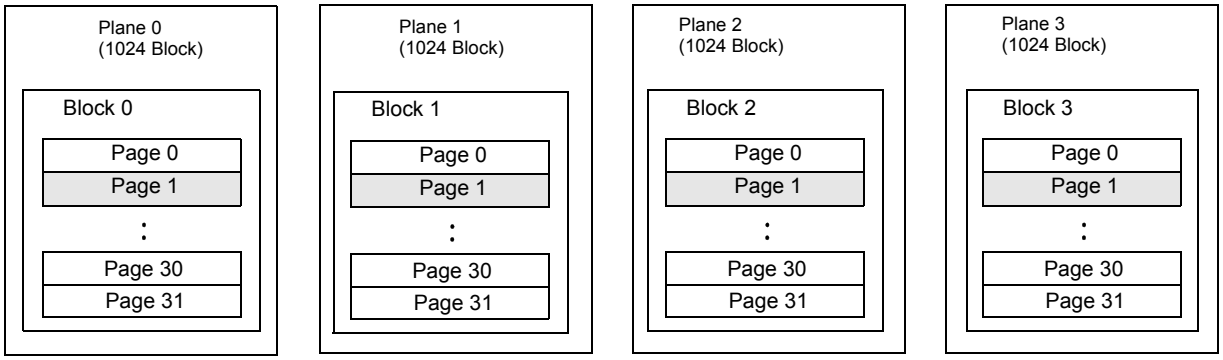

Figure 15. Addressing Multiple Planes

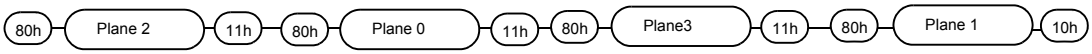

Figure 16. Multi-Plane Page Program & Read Status Operation

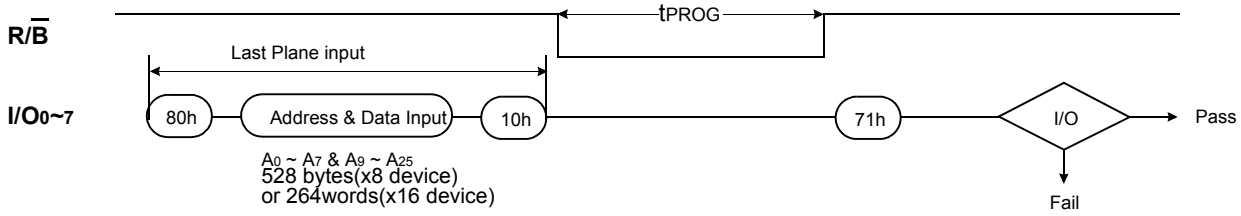

Multi-Plane Block Erase

Basic concept of Multi-Plane Block Erase operation is identical to that of Multi-Plane Page Program. Up to four blocks, one from each plane can be simultaneously erased. Standard Block Erase command sequences (Block Erase Setup command followed by three address cycles) may be repeated up to four times for erasing up to four blocks. Only one block should be selected from each plane. The Erase Confirm command initiates the actual erasing process. The completion is detected by analyzing R/$\overline{B}$ pin or Ready/Busy status (I/O 6). Upon the erase completion, pass/fail status of each block is examined by reading extended pass/fail status(I/O 1 through I/O 4).

Figure 17. Four Block Erase Operation

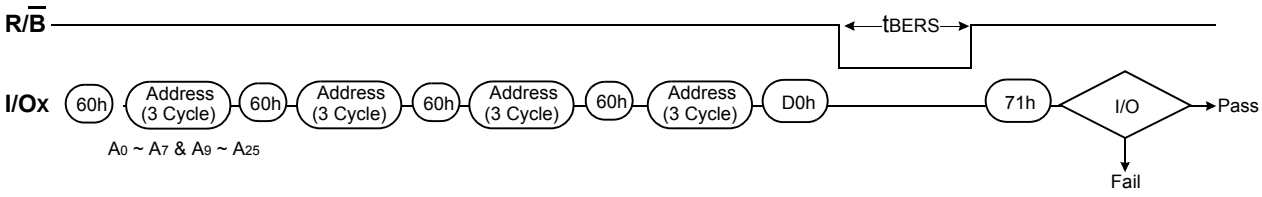

Copy-Back Program

The copy-back program is configured to quickly and efficiently rewrite data stored in one page within the plane to another page within the same plane without utilizing an external memory. Since the time-consuming sequently-reading and its re-loading cycles are removed, the system performance is improved. The benefit is especially obvious when a portion of a block is updated and the rest of the block also need to be copied to the newly assigned free block. The operation for performing a copy-back program is a sequential execution of page-read without burst-reading cycle and copying-program with the address of destination page. A normal read operation with "00h" command and the address of the source page moves the whole 528byte data into the internal page registers. As soon as the device returns to Ready state, Page-Copy Data-input command (8Ah) with the address cycles of destination page followed may be written. The Program Confirm command (10h) is required to actually begin the programming operation. Copy-Back Program operation is allowed only within the same memory plane. Once the Copy-Back Program is finished, any additional partial page programming into the copied pages is prohibited before erase. A14 and A15 must be the same between source and target page. Figure18 shows the command sequence for single plane operation. **"When there is a program-failure at Copy-Back operation, error is reported by pass/fail status. But if the soure page has a bit error for charge loss, accumulated copy-back operations could also accumulate bit errors. For this reason, two bit ECC is recommended for copy-back operation."**

Figure 18. One Page Copy-Back program Operation

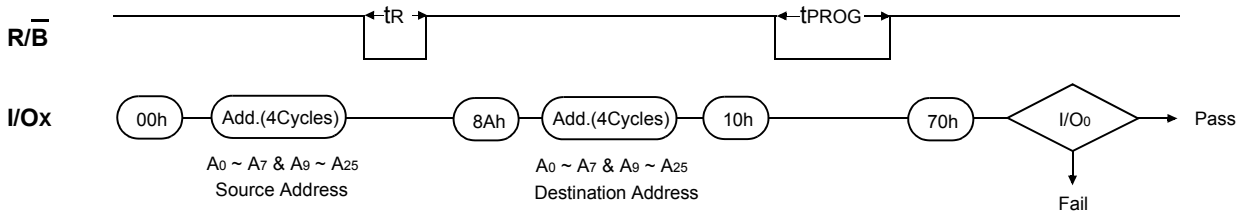

Multi-Plane Copy-Back Program

Multi-Plane Copy-Back Program is an extension of one page Copy-Back Program into four plane operation. Since the device is equipped with four memory planes, activating the four sets of 528 bytes(x8 device) or 264words(x16 device)page registers enables a simultaneous Multi-Plane Copy-Back programming of four pages. Partial activation of four planes is also permitted.

First, normal read operation with the "00h"command and address of the source page moves the whole 528 byte data into internal page buffers. Any further read operation for transferring the addressed pages to the corresponding page register must be executed with "03h" command instead of "00h" command. Any plane may be selected without regard to "00h" or "03h". Up to four planes may be addressed. Data moved into the internal page registers are loaded into the destination plane addresses. After the input of command sequences for reading the source pages, the same procedure as Multi-Plane Page programming except for a replacement address command with "8Ah" is executed. Since no programming process is involved during data loading at the destination plane address , R/$\overline{B}$ remains in Busy state for a short period of time(tDBSY). Read Status command (standard 70h or alternate 71h) may be issued to find out when the device returns to Ready state by polling the Ready/Busy status bit(I/O 6). After inputting data for the last plane, actual True Page Program (10h) instead of dummy Page Program command (11h) must be followed to start the programming process. The operation of R/$\overline{B}$ and Read Status is the same as that of Page Program. Since maximum four pages are programmed simultaneously, pass/fail status is available for each page when the program operation completes. No pointer operation is supported with Multi-Plane Copy-Back Program. **Once the Multi-Plane Copy-Back Program is finished, any additional partial page programming into the copied pages is prohibited before erase once the Multi-Plane Copy-Back Program is finished.**

Figure 19. Four-Plane Copy-Back Program

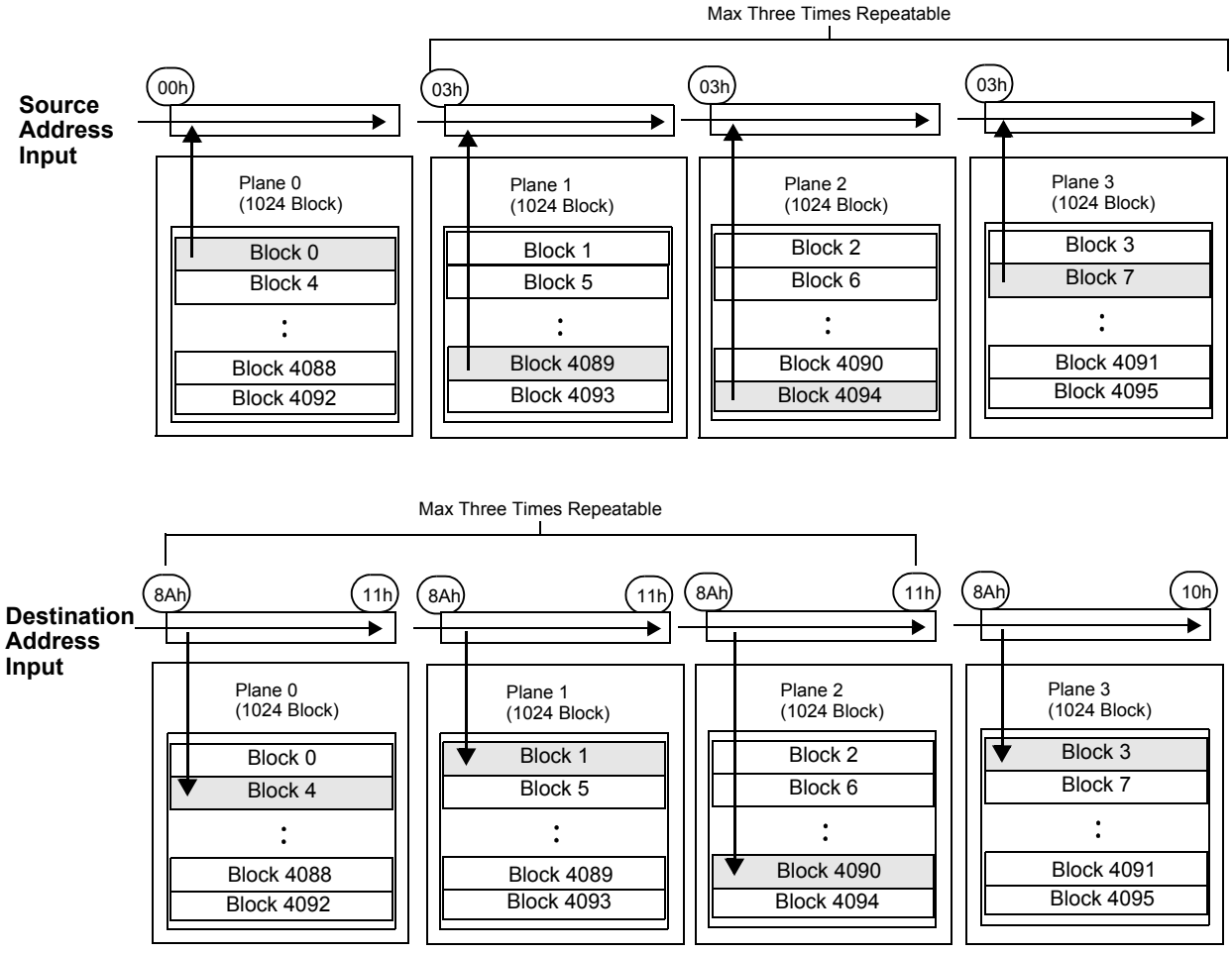

Figure 20. Four-Plane Copy-Back Page Program (Continued)

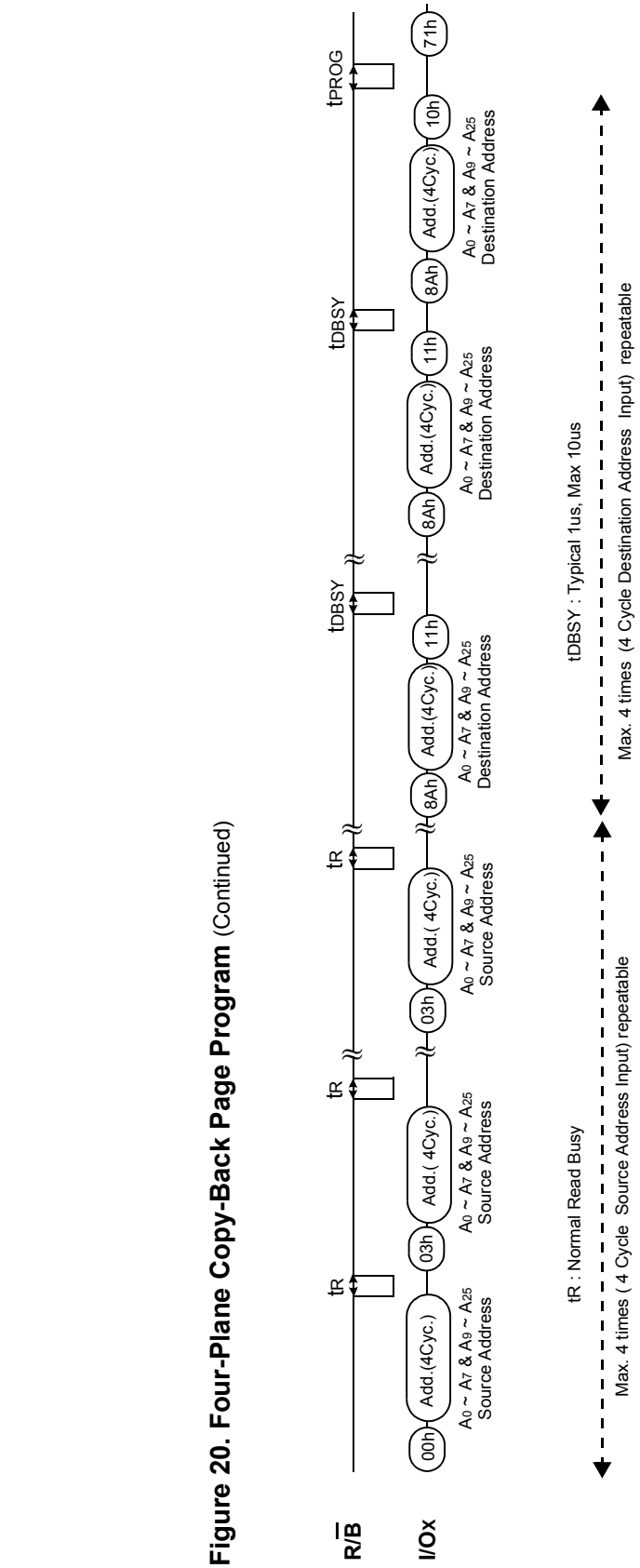

READ STATUS

The device contains a Status Register which may be read to find out whether program or erase operation is completed, and whether the program or erase operation is completed successfully. After writing 70h command to the command register, a read cycle outputs the content of the Status Register to the I/O pins on the falling edge of $\overline{CE}$ or $\overline{RE}$, whichever occurs last. This two line control allows the system to poll the progress of each device in multiple memory connections even when R/$\overline{B}$ pins are common-wired. $\overline{RE}$ or $\overline{CE}$ does not need to be toggled for updated status. Refer to table 4 for specific Status Register definitions. The command register remains in Status Read mode until further commands are issued to it. Therefore, if the status register is read during a random read cycle, a read command(00h or 50h) should be given before sequential page read cycle.

For Read Status of Multi Plane Program/Erase, the Read Multi-Plane Status command(71h) should be used to find out whether multi-plane program or erase operation is completed, and whether the program or erase operation is completed successfully. The pass/fail status data must be checked only in the Ready condition after the completion of Multi-Plane program or erase operation.

Table4. Read Staus Register Definition

I/O No.	Status	Definition by 70h Command		Definition by 71h Command	
I/O 0	Total Pass/Fail	Pass : "0"	Fail : "1"	Pass : "0"(1)	Fail : "1"
I/O 1	Plane 0 Pass/Fail	Must be don't -cared		Pass : "0"(2)	Fail : "1"
I/O 2	Plane 1 Pass/Fail	Must be don't -cared		Pass : "0"(2)	Fail : "1"
I/O 3	Plane 2 Pass/Fail	Must be don't -cared		Pass : "0"(2)	Fail : "1"
I/O 4	Plane 3 Pass/Fail	Must be don't -cared		Pass : "0"(2)	Fail : "1"
I/O 5	Reserved	Must be don't -cared		Must be don't-cared	
I/O 6	Device Operation	Busy : "0"	Ready : "1"	Busy : "0"	Ready : "1"
I/O 7	Write Protect	Protected : "0"	Not Protected : "1"	Protected : "0"	Not Protected : "1"

NOTE : 1. I/O 0 describes combined Pass/Fail condition for all planes. If any of the selected multiple pages/blocks fails in Program/Erase operation, it sets "Fail" flag.
2. The pass/fail status applies only to the corresponding plane.

Read ID

The device contains a product identification mode, initiated by writing 90h to the command register, followed by an address input of 00h. Four read cycles sequentially output the manufacture code(ECh), and the device code, Reserved(A5h), Multi plane operation code(C0h) respectively. A5h must be don't-cared. C0h means that device supports Multi Plane operation. The command register remains in Read ID mode until further commands are issued to it. Figure 21 shows the operation sequence.

Figure 21. Read ID Operation 1

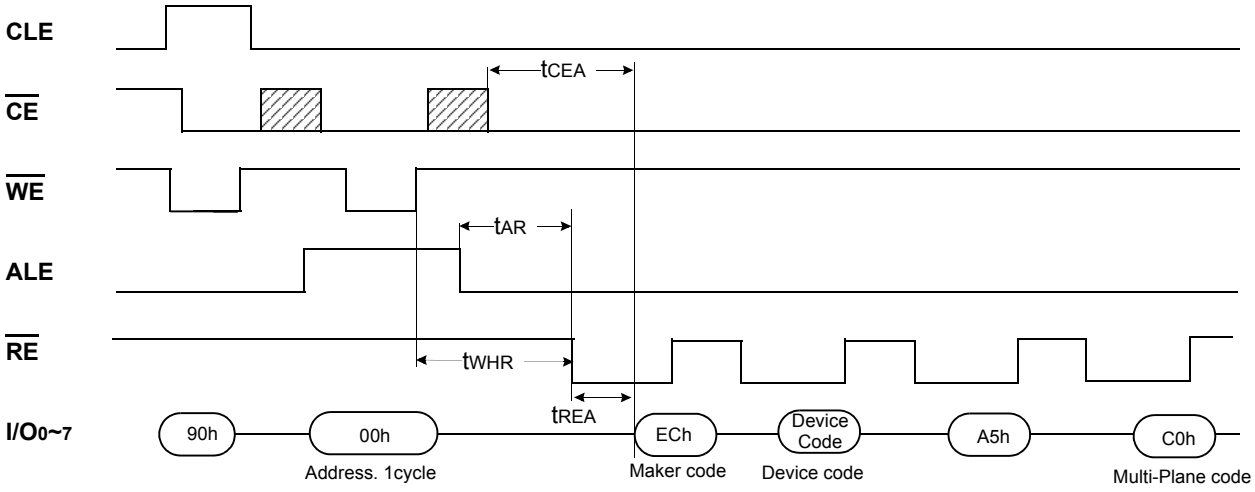

Device	Device Code
K9F1208D0A	76h
K9F1208U0A	76h
K9F1216D0A	XX56h
K9F1216U0A	XX56h

RESET

The device offers a reset feature, executed by writing FFh to the command register. When the device is in Busy state during random read, program or erase mode, the reset operation will abort these operations. The contents of memory cells being altered are no longer valid, as the data will be partially programmed or erased. The command register is cleared to wait for the next command, and the Status Register is cleared to value C0h when $\overline{WP}$ is high. Refer to table 5 for device status after reset operation. If the device is already in reset state a new reset command will not be accepted by the command register. The R/$\overline{B}$ pin transitions to low for tRST after the Reset command is written. Refer to Figure 22 below.

Figure 22. RESET Operation

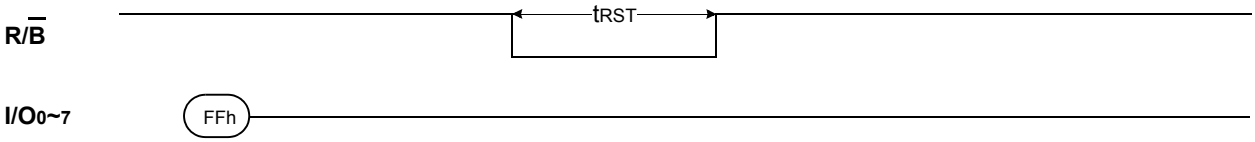

Table5. Device Status

	After Power-up	After Reset
Operation Mode	Read 1	Waiting for next command

READY/$\overline{BUSY}$

The device has a R/$\overline{B}$ output that provides a hardware method of indicating the completion of a page program, erase and random read completion. The R/$\overline{B}$ pin is normally high but transitions to low after program or erase command is written to the command register or random read is started after address loading. It returns to high when the internal controller has finished the operation. The pin is an open-drain driver thereby allowing two or more R/$\overline{B}$ outputs to be Or-tied. Because pull-up resistor value is related to tr(R/$\overline{B}$) and current drain during busy(ibusy) , an appropriate value can be obtained with the following reference chart(Fig 23). Its value can be determined by the following guidance.

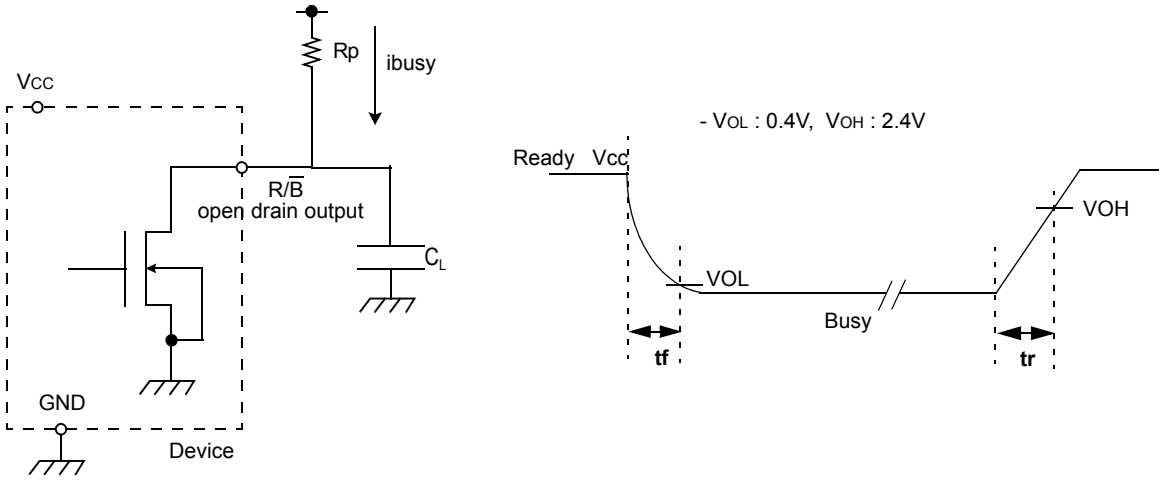

Figure 23. Rp vs tr ,tf & Rp vs ibusy

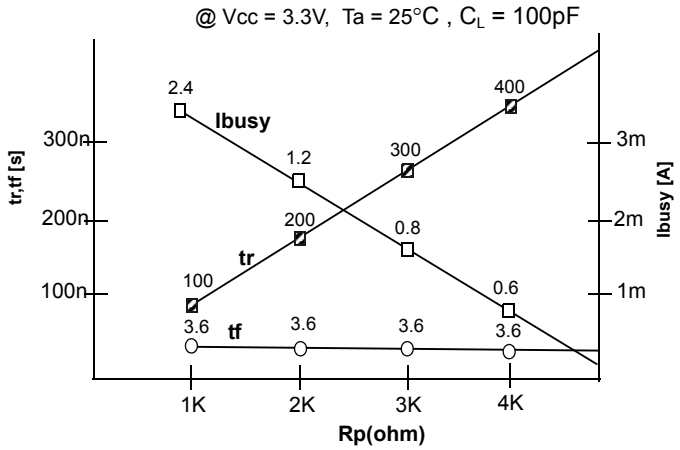

Rp value guidance

$$Rp(min) = \frac{V_{CC}(Max.) - V_{OL}(Max.)}{I_{OL} + \Sigma I_L} = \frac{3.2V}{8mA + \Sigma I_L}$$

where I_L is the sum of the input currents of all devices tied to the R/$\overline{B}$ pin.
Rp(max) is determined by maximum permissible limit of tr

Data Protection & Power-up sequence

The device is designed to offer protection from any involuntary program/erase during power-transitions. An internal voltage detector disables all functions whenever Vcc is below about 2V. $\overline{WP}$ pin provides hardware protection and is recommended to be kept at V_{IL} during power-up and power-down. A recovery time of minimum 10μs is required before internal circuit gets ready for any command sequences as shown in Figure 24. The two step command sequence for program/erase provides additional software protection.

Figure 24. AC Waveforms for Power Transition

