SHEET OF

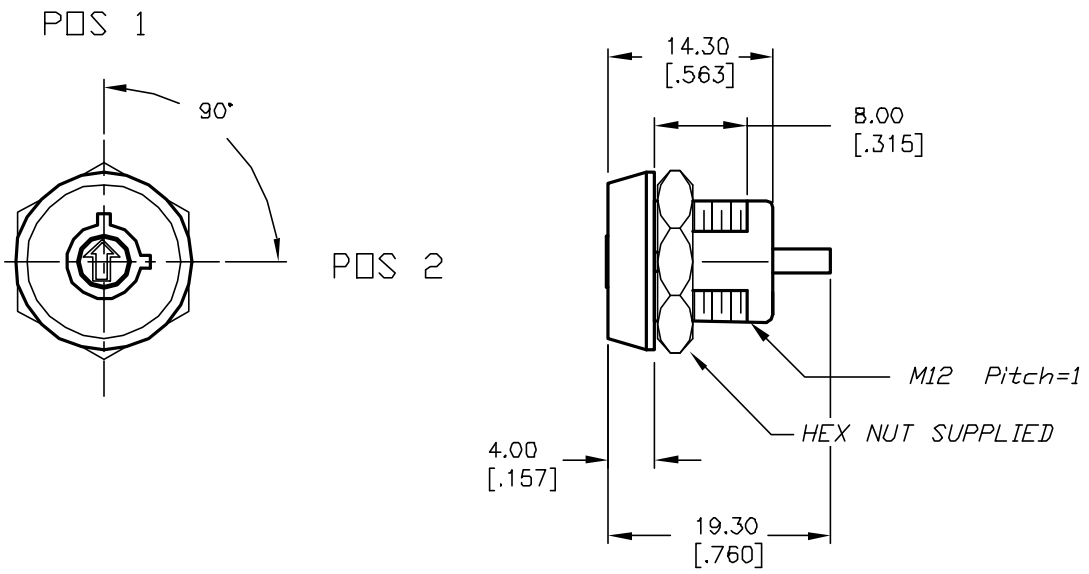

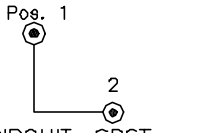

CIRCUIT: SPST
CONTACT CONFIGURATION
90° INDEXING

SWITCH FUNCTION	
POS 1	POS 2
⇑	⇒
OFF	1-2

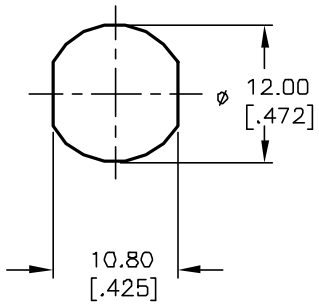

RECOMMENDED PANEL CUTOUT

NOTES:

1. ALL DIMENSIONS IN MM [INCH]
2. GENERAL TOLERANCE: X.X=±0.4
   X.XX=±0.25
3. TERM. NOS. FOR REFERENCE ONLY.
4. RATING: 1A @125VAC, 0.5A @250VAC
5. CONTACT RESISTANCE: 20mILLI-OHMS
6. DIELECTRIC STRENGTH: 1500 VAC-1Minute
7. INSULATION RESISTANCE: 200 Mega-OHMS min.
8. MATERIALS:
   HOUSING: ZINC ALLOY DIE CAST
   CYLINDER: ZINC ALLOY W/CHROME PLATING
   TERMINAL AND CONTACTS: SILVER PLATED
   KEYS (2) KEY CODE 102: TUBULAR
   ZINC ALLOY, CHROME PLATING

LEGEND

◉ = INDICATES KEY PULL POSSIBLE

REV.	ECN No.	DESCRIPTION	DATE	CHKD
B	12174	REVISED SCHEMATIC	5/22/02	CJB
A	11746	RELEASED FOR PRODUCTION	10/16/01	CJB

THE INFORMATION CONTAINED IN THIS DOCUMENT IS PROPRIETARY TO E-SWITCH AND IS NOT TO BE COPIED OR TRANSFERRED

E-SWITCH®

TITLE: K□106A-102

SCALE	DATE	DR	DWG	REV
1.5:1	10/16/01	CJB	K100302	B