SHEET OF

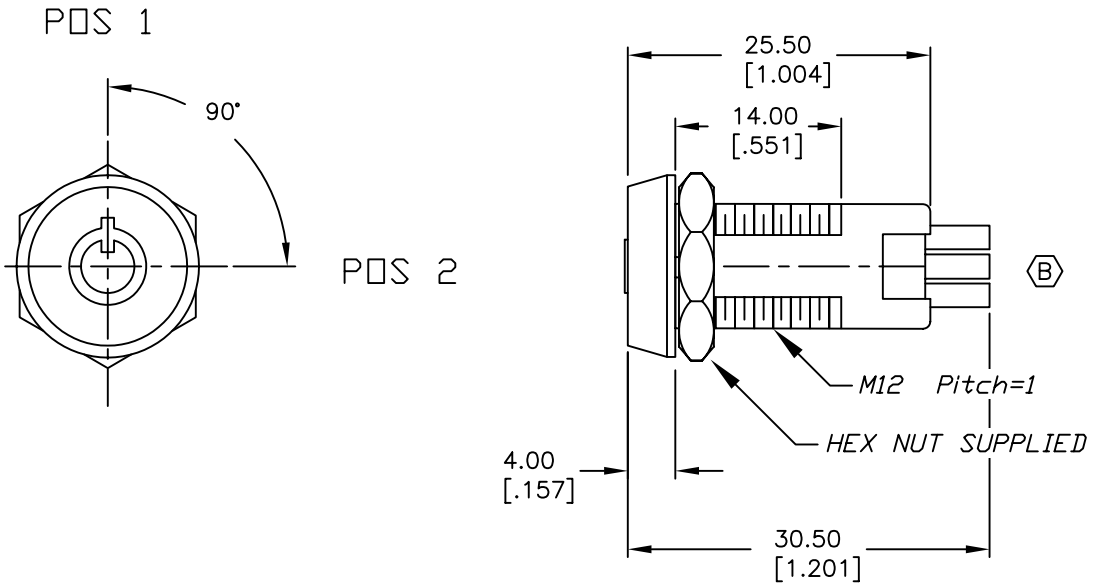



CIRCUIT: SPDT
CONTACT CONFIGURATION

SWITCH FUNCTION	
ON	ON
↑	→
POS 1	POS 2
1-2	3-4

LEGEND
○ =OFF POSITION
▮ =INDICATES KEY PULL
X =INDICATES NO KEY PULL

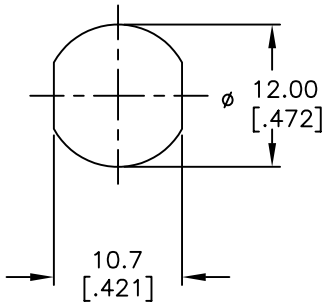

RECOMMENDED PANEL CUTOUT

NOTES:

1. ALL DIMENSIONS IN MM [INCH]
2. GENERAL TOLERANCE: X.X=±0.4
   X.XX=±0.25
3. TERM. NOS. FOR REFERENCE ONLY.
4. RATING: 1A @125VAC, 0.5A @250VAC
5. CONTACT RESISTANCE: 10mILLI-OHMS
6. DIELECTRIC STRENGTH: 1000 VAC-1Minute
7. INSULATION RESISTANCE: 200 Mega-OHMS min.
8. MATERIALS:
   HOUSING: ZINC ALLOY DIE CAST
   CYLINDER: ZINC ALLOY W/CHROME PLATING
   TERMINAL AND CONTACTS: SILVER PLATED
   KEYS (2) KEY CODE 801: TUBULAR
   ZINC ALLOY, CHROME PLATING

REV.	ECN No.	DESCRIPTION	DATE	CHKD
A	15498	RELEASED FOR PRODUCTION	11/4/05	PH

THE INFORMATION CONTAINED IN THIS DOCUMENT IS PROPRIETARY TO E-SWITCH AND IS NOT TO BE COPIED OR TRANSFERRED

E-SWITCH®

TITLE: K□103C-801

SCALE	DATE	DR	DWG	REV
1.5:1	11/4/05	PH	K100207	A