SP4T RF Switch JSW4-272DR+

50Ω 5 to 2700 MHz High Power 3W

The Big Deal

- High Port count in super small size
- Single Positive Supply Voltage, 2.5 – 4.8V
- High Power P0.1dB, 3W typ.
- Low Insertion Loss, 0.6 dB at 1 GHz



CASE STYLE: MT1817

Product Overview

JSW4-272DR+ is a high power reflective SP4T RF switch, with reflective short on output ports in the off condition. Made using Silicon-on-Insulator process, it has very high IP3, a built-in CMOS driver and negative voltage generator. Its tiny 2x2mm, 14-lead case enables wideband performance in tight spaces and dense PCB layouts.

Key Features

Feature	Advantages
Wideband operation 5-2700 MHz	Enables a single component to be used in a vast array of applications from VHF up to 2.7 GHz.
High IIP3: 55 dBm typ.	Results in little or negligible inter-modulation generation, meeting requirements for digital communication signals.
Low Loss, 0.6 dB at 1 GHz High input power, 3W	Low loss and high power capability enable a single switch to be used for a variety of applications, saving inventory.
Built in negative voltage generator	Operates with a single positive supply voltage; no need for DC blocking capacitors, unless external DC is present at the RF ports.
Built-in CMOS driver	No need for external driver, saving PCB space and cost.
Tiny MCLP package 2 x 2mm, 14-lead	Provides low inductance, repeatable transitions, and excellent thermal contact to PCB.

SP4T RF Switch

50Ω 5-2700 MHz

Reflective RF Switch with internal driver.
Single Supply Voltage, +2.5V to +4.8V, High Power 3W

Product Features

- High Isolation, 37 dB typ. at 1 GHz
- Low insertion loss, 0.6 dB typ. at 1 GHz
- High IP3, 59 dBm typ. at 1 GHz
- Low current consumption, 40 μA typ.
- High Power, P0.1dB 3W typ.



JSW4-272DR+

CASE STYLE: MT1817

+RoHS Compliant

The +Suffix identifies RoHS Compliance. See our web site for RoHS Compliance methodologies and qualifications

Typical Applications

- CATV systems
- SATCOM system
- Automated Test Stations
- Telecom systems

General Description

JSW4-272DR+ is a high power 3W reflective SP4T switch with integral driver, operates with single positive supply voltage while consuming, 40 μA typical. It has been designed for very wideband operation of 5-2700 MHz. It is packaged in a tiny 14-lead 2mm x 2mm x 0.55mm package and is rated MSL1 and class 1B ESD.

Simplified Schematic and Pad Description

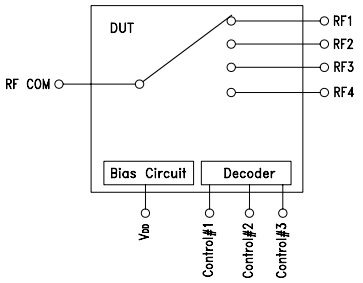

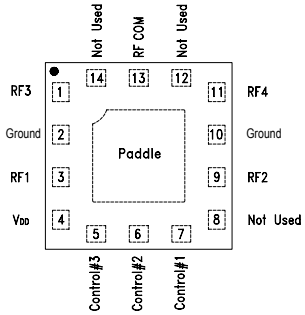

Function	Pad Number	Description
RF COM	13	RF Common/ SUM Port
RF1	3	RF Out #1/In Port #1
RF2	9	RF Out #2/In Port #2
Ground	2	Ground Externally
Ground	10	Ground Externally
RF3	1	RF Out #5/In Port #5
RF4	11	RF Out #6/In Port #6

Function	Pad Number	Description
Control #1	7	Control IN #1
Control #2	6	Control IN #2
Control #3	5	Control IN #3
VDD	4	Supply Voltage
Ground	Paddle	Ground Externally
Not Used	8,12,14	No Connection

RF Electrical Specifications[1], 5 - 2700 MHz, T_{AMB}=25°C, V_{DD}= +2.5 to 4.8V

Parameter	Condition (MHz)	Min.	Typ.	Max.	Units
Frequency Range		5		2700	MHz
Insertion Loss[2]	5 to 1000	—	0.6	0.8	dB
	1000 to 2000	—	0.6	0.8	
	2000 to 2700	—	0.6	0.8	
Isolation between Common Port and RF1 to RF4 Ports [3]	5 to 1000	35	37	—	dB
	1000 to 2000	28	30	—	
	2000 to 2700	25	27	—	
Return Loss (ON STATE) RF-COM, RF1 to RF4 Ports	5 to 1000	—	15.5	—	dB
	1000 to 2000	—	14.2	—	
	2000 to 2700	—	14.3	—	
Input IP3 V_{DD}=2.5 to 4.8V	5 to 500	—	55	—	dBm
V_{DD}=3.0V	1000 to 2700	—	59	—	
0.1dB Input Compression[4]	5 to 2700	—	35	—	dBm

DC Electrical Specifications

Parameter	Min.	Typ.	Max.	Units
VDD, Supply Voltage	2.5	3.0	4.8	V
Supply Current (V_{DD} = 3V)		40		µA
Control Voltage Low	0		0.4	V
Control Voltage High[5]	1.35	1.8	2.7	V
Control Current		0.5	1.0	µA
Shutdown Current at V_{DD} = 3V		5		µA

Notes:
1. As measured in Mini-Circuit's test board TB-724-4+ (see Characterization Test Circuit, Fig.1).
2. Insertion loss values are de-embedded from test board loss.
3. Isolations for other port combinations, see Tables 1 & 2
4. Do not exceed RF input power as shown in Absolute Maximum Rating table.
5. If V_{DD} <2.7V, then Max Control Voltage high=V_{DD}

Switching Specifications

Parameter	Min.	Typ.	Max.	Units
Rise/Fall Time (10 to 90% or 90 to 10% RF)	—	0.42 (Rise Time) 0.84 (Fall Time)	—	µSec
Switching Time, 50% CTRL to 90/10% RF	—	1.9 (ON Time) 1.4 (OFF Time)	—	µSec
Video Feedthrough, (control 0 to 1.65V, freq.=10 KHz)	—	3.0	—	mV_{P-P}

Table 1. Isolation Matrix (RF-COM to RF1 to RF4 Ports)

	Frequency (GHz)	Isolation Typ. (dB) "ON" Port			
RF Com to Port		RF1	RF2	RF3	RF4
RF1	0.01-1.0	---	49	53	49
RF1	1.0-2.0	---	43	38	43
RF1	2.0-2.7	---	40	34	39
RF2	0.01-1.0	48	---	48	50
RF2	1.0-2.0	43	---	42	38
RF2	2.0-2.7	39	---	39	33
RF3	0.01-1.0	44	39	---	40
RF3	1.0-2.0	33	34	---	34
RF3	2.0-2.7	28	31	---	31
RF4	0.01-1.0	39	41	40	---
RF4	1.0-2.0	33	32	34	---
RF4	2.0-2.7	31	28	31	---

Table 2. Isolation Matrix (Between Output Ports)

	Frequency (GHz)	Isolation Typ. (dB) "ON" Port & to Port			
From Port		RF1	RF2	RF3	RF4
RF1	0.01-1.0	---	54	37	55
RF1	1.0-2.0	---	45	32	46
RF1	2.0-2.7	---	41	28	42
RF2	0.01-1.0	54	---	55	37
RF2	1.0-2.0	44	---	45	32
RF2	2.0-2.7	40	---	41	29
RF3	0.01-1.0	44	58	---	48
RF3	1.0-2.0	37	45	---	40
RF3	2.0-2.7	32	42	---	37
RF4	0.01-1.0	45	44	48	---
RF4	1.0-1.5	38	37	39	---
RF4	1.5-2.0	36	32	37	---

Absolute Maximum Ratings[6]

Parameter	Ratings
Operating Temperature	-40°C to +85°C
Storage Temperature	-55°C to 150°C
V_{DD}, Supply Voltage	5.0V
Voltage Control	-0.5V Min. 3.0 Max.
RF input power[7]	5 Watt

6. Operation of this device above any of these conditions may cause permanent damage.
7. Derate linearly to 2.5W at 85°C.

Truth Table[8] (State of control voltage selects the desired switch state)

State of Control Voltages			RF Common to			
Control #1	Control #2	Control #3	RF1	RF2	RF3	RF4
L	L	L	ON	—	—	—
L	L	H	—	ON	—	—
H	L	L	—	—	ON	—
H	L	H	—	—	—	ON
H	H	H	Shutdown			

8. Any control state not defined above, places the switch in an undefined state, but will not damage the switch.

Characterization Test Circuit

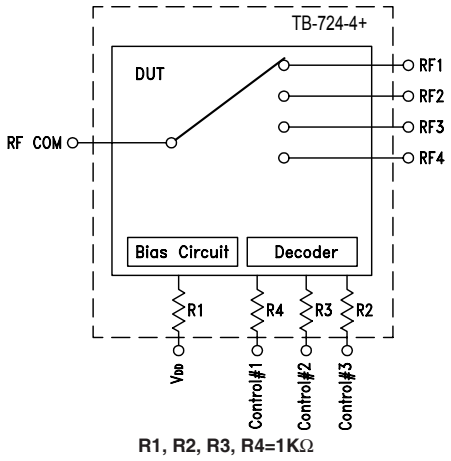

Figure 1: Block Diagram Of Test Circuit Used For Characterization.
(DUT soldered on Mini-Circuits' TB-724-4+)

Test Equipment:

For Insertion loss, Isolation, Return loss:
Agilent's N5230A Network Analyzer , E3631A power supply.
For Switching Time and Video Feed through
Agilent's HP81110A pulse generator, 54833A Oscilloscope, E3631A power supply.
Agilent's N9020A Spectrum Analyzer, E8257D Generator, E3631A power supply
For Compression:
R&S Network Analyzer ZVA24, E3631A power supply.

Conditions:

V_{DD}= +2.5, +3.0 and +4.8V, Control= 0 and 1.35V.
For Insertion loss, isolation and return loss: Pin=0 dBm
For Input IP3: Pin=+10dBm/tone at V_{DD}=3V
For Switching time: RF frequency: DC at 200mV, Control Frequency: 10 KHz and 0 and +8V.

Product Marking

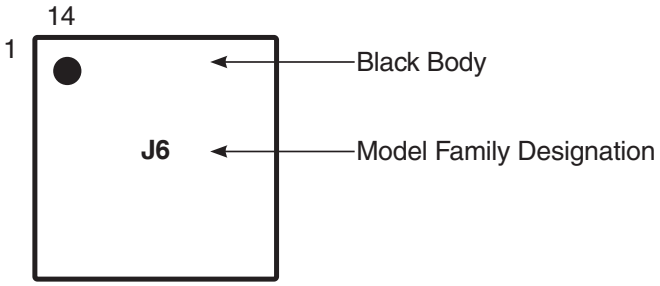

Recommended Application Circuit

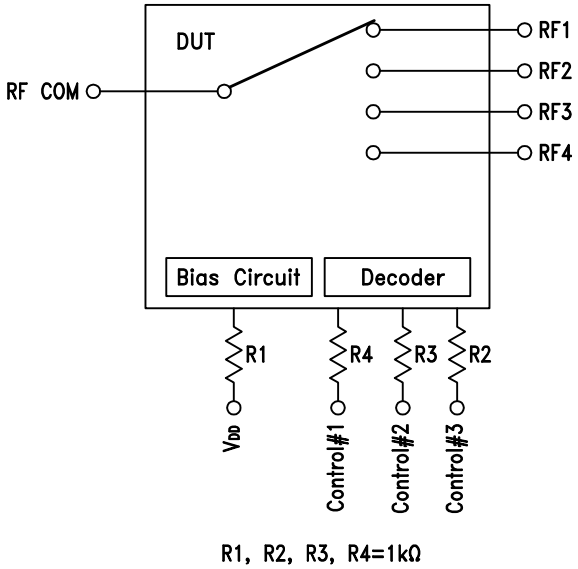

Fig. 2: Evaluation board includes case, connectors and components soldered to PCB.

Additional Detailed Technical Information *additional information is available on our dash board. To access this information click here*	
Performance Data	Data Table
	Swept Graphs
Case Style	MT1817 *Plastic package; Lead finish: Matte Tin*
Tape & Reel **Standard quantities available on reel**	F108 *7" reels with 20, 50, 100, 200, 500, 1K or 3K devices*
Suggested Layout for PCB Design	PL-462
Evaluation Board	TB-724-4+
Environmental Ratings	ENV75

ESD Rating

Human Body Model (HBM): Class 1B (500 to < 1000V) in accordance with JESD22-A114

Machine Model (MM): Class A (Pass 100V) in accordance with JESD22-A115

MSL Rating

Moisture Sensitivity: MSL1 in accordance with IPC/JEDEC J-STD-020D

MSL Test Flow Chart

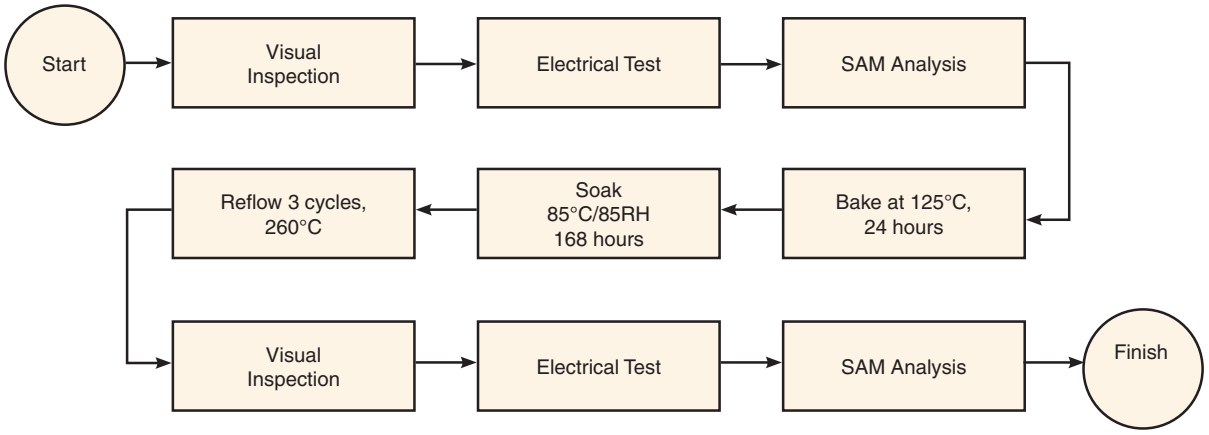

Additional Notes

A. Performance and quality attributes and conditions not expressly stated in this specification document are intended to be excluded and do not form a part of this specification document.

B. Electrical specifications and performance data contained in this specification document are based on Mini-Circuit's applicable established test performance criteria and measurement instructions.

C. The parts covered by this specification document are subject to Mini-Circuits standard limited warranty and terms and conditions (collectively, "Standard Terms"); Purchasers of this part are entitled to the rights and benefits contained therein. For a full statement of the Standard Terms and the exclusive rights and remedies thereunder, please visit Mini-Circuits' website at www.minicircuits.com/MCLStore/terms.jsp