## JST16 Series 16A TRIACs

Rev.5.0

### DESCRIPTION:

With high ability to withstand the shock loading of large current, JST16 series triacs provide high dv/dt rate with strong resistance to electromagnetic interface. With high commutation performances, 3 quadrants products especially recommended for use on inductive load. From all three terminals to external heatsink, JST16A provides a rated insulation voltage of 2500 $V_{RMS}$, and JST16F provides a rated insulation voltage of 2000$V_{RMS}$, complying with UL standards (File ref: E252906).

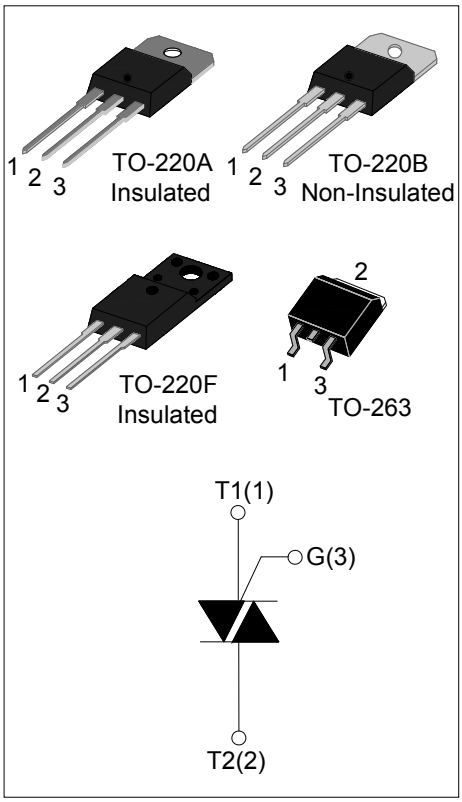


### MAIN FEATURES

| Symbol | Value | Unit |
|---|---|---|
| $I_{T(RMS)}$ | 16 | A |
| $V_{DRM}$ /$V_{RRM}$ | 600 and 800 and 1200 | V |

### ABSOLUTE MAXIMUM RATINGS

| Parameter | | Symbol | Value | Unit |
|---|---|---|---|---|
| Storage junction temperature range | | $T_{stg}$ | -40-150 | ℃ |
| Operating junction temperature range | | $T_j$ | -40-125 | ℃ |
| Repetitive peak off-state voltage ($T_j$=25℃) | | $V_{DRM}$ | 600/800/1200 | V |
| Repetitive peak reverse voltage ($T_j$=25℃) | | $V_{RRM}$ | 600/800/1200 | V |
| Non repetitive surge peak Off-state voltage | | $V_{DSM}$ | $V_{DRM}$ +100 | V |
| Non repetitive peak reverse voltage | | $V_{RSM}$ | $V_{RRM}$ +100 | V |
| RMS on-state current | TO-220A(Ins) ($T_C$=86℃) | $I_{T(RMS)}$ | 16 | A |
| | TO-220B(Non-Ins) ($T_C$=107℃) | | | |
| | TO-220F(Ins) ($T_C$=90℃) | | | |
| | TO-263 ($T_C$=80℃) | | | |
| Non repetitive surge peak on-state current (full cycle, F=50Hz) | | $I_{TSM}$ | 160 | A |

| | | | |
|---|---|---|---|
| $I^2t$ value for fusing (tp=10ms) | $I^2t$ | 128 | $A^2s$ |
| Critical rate of rise of on-state current ($I_G$ =2×$I_{GT}$) | dI/dt | 50 | A/μs |
| Peak gate current | $I_{GM}$ | 4 | A |
| Average gate power dissipation | $P_{G(AV)}$ | 1 | W |
| Peak gate power | $P_{GM}$ | 5 | W |

**ELECTRICAL CHARACTERISTICS** ($T_j$=25℃ unless otherwise specified)

3 Quadrants

| Symbol | Test Condition | Quadrant | | Value | | | | Unit |
|---|---|---|---|---|---|---|---|---|
| | | | | BW | CW | SW | TW | |
| $I_{GT}$ | $V_D$ =12V $R_L$ =33Ω | Ⅰ-Ⅱ-Ⅲ | MAX | 50 | 35 | 10 | 5 | mA |
| $V_{GT}$ | | Ⅰ-Ⅱ-Ⅲ | MAX | 1.3 | | | | V |
| $V_{GD}$ | $V_D$ =$V_{DRM}$ $T_j$ =125℃ $R_L$ =3.3KΩ | Ⅰ-Ⅱ-Ⅲ | MIN | 0.2 | | | | V |
| $I_L$ | $I_G$ =1.2$I_{GT}$ | Ⅰ-Ⅲ | MAX | 70 | 50 | 30 | 15 | mA |
| | | Ⅱ | | 80 | 60 | 40 | 20 | |
| $I_H$ | $I_T$ =100mA | | MAX | 60 | 40 | 25 | 15 | mA |
| dV/dt | $V_D$=2/3$V_{DRM}$ Gate Open $T_j$ =125℃ | | MIN | 1000 | 500 | 200 | 100 | V/μs |

4 Quadrants

| Symbol | Test Condition | Quadrant | | Value | | Unit |
|---|---|---|---|---|---|---|
| | | | | B | C | |
| $I_{GT}$ | $V_D$ =12V $R_L$ =33Ω | Ⅰ-Ⅱ-Ⅲ | MAX | 50 | 25 | mA |
| | | Ⅳ | | 70 | 50 | |
| $V_{GT}$ | | ALL | MAX | 1.5 | | V |
| $V_{GD}$ | $V_D$ =$V_{DRM}$ $T_j$ =125℃ $R_L$ =3.3KΩ | ALL | MIN | 0.2 | | V |
| $I_L$ | $I_G$ =1.2$I_{GT}$ | Ⅰ-Ⅲ-Ⅳ | MAX | 70 | 50 | mA |
| | | Ⅱ | | 100 | 80 | |
| $I_H$ | $I_T$ =100mA | | MAX | 60 | 40 | mA |
| dV/dt | $V_D$=2/3$V_{DRM}$ Gate Open $T_j$=125℃ | | MIN | 500 | 200 | V/μs |

## STATIC CHARACTERISTICS

| Symbol | Parameter | | Value(MAX) | | | Unit |
|---|---|---|---|---|---|---|
| | | | -600V | -800V | -1200V | |
| $V_{TM}$ | $I_{TM}$ =22.5A tp=380μs | $T_j$=25℃ | 1.5 | | | V |
| $I_{DRM}$ | $V_D$ =$V_{DRM}$ $V_R$ =$V_{RRM}$ | $T_j$=25℃ | 5 | 5 | 10 | μA |
| $I_{RRM}$ | | $T_j$=125℃ | 2 | 2 | 1 | mA |

## THERMAL RESISTANCES

| Symbol | Parameter | | Value | Unit |
|---|---|---|---|---|
| $R_{th(j-c)}$ | junction to case(AC) | TO-220A(Ins) | 2.1 | ℃/W |
| | | TO-220B(Non-Ins) | 1.2 | |
| | | TO-220F(Ins) | 2.3 | |
| | | TO-263 | 2.5 | |

## ORDERING INFORMATION

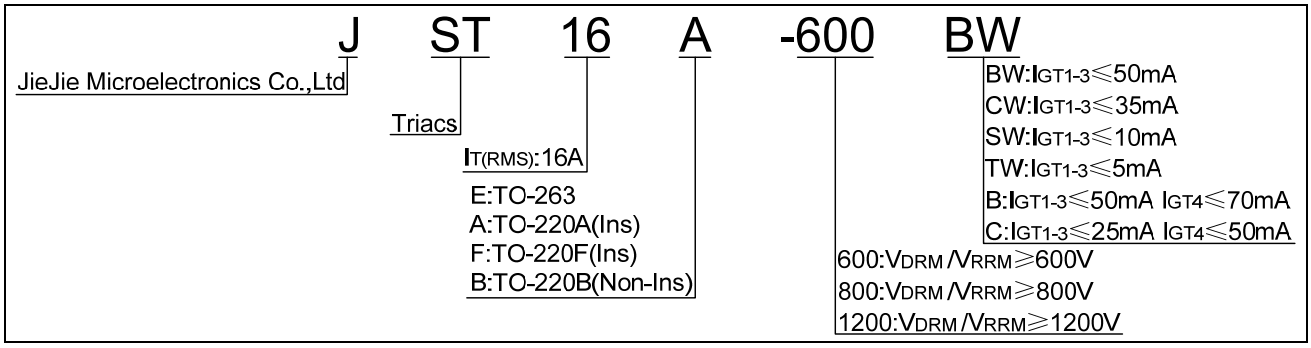

## PACKAGE MECHANICAL DATA

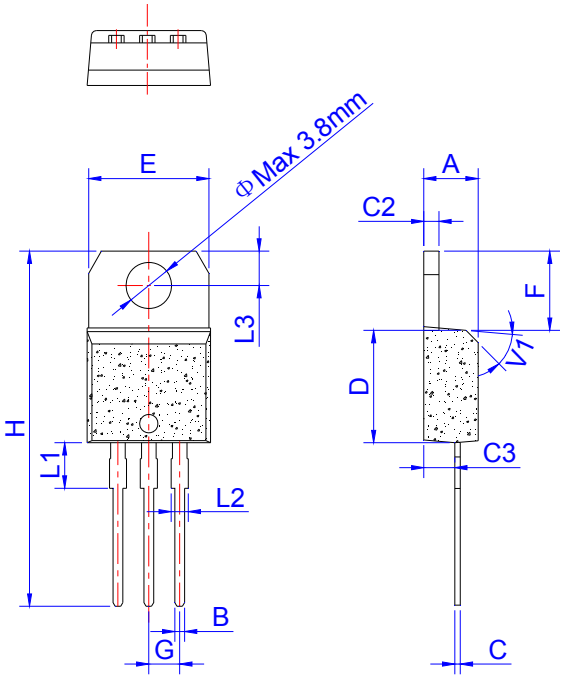


TO-220A Ins

| Ref. | Dimensions | | | | | |
|---|---|---|---|---|---|---|
| | Millimeters | | | Inches | | |
| | Min. | Typ. | Max. | Min. | Typ. | Max. |
| A | 4.40 | | 4.60 | 0.173 | | 0.181 |
| B | 0.61 | | 0.88 | 0.024 | | 0.035 |
| C | 0.46 | | 0.70 | 0.018 | | 0.028 |
| C2 | 1.21 | | 1.32 | 0.048 | | 0.052 |
| C3 | 2.40 | | 2.72 | 0.094 | | 0.107 |
| D | 8.60 | | 9.70 | 0.339 | | 0.382 |
| E | 9.80 | | 10.4 | 0.386 | | 0.409 |
| F | 6.55 | | 6.95 | 0.258 | | 0.274 |
| G | | 2.54 | | | 0.1 | |
| H | 28.0 | | 29.8 | 1.102 | | 1.173 |
| L1 | | 3.75 | | | 0.148 | |
| L2 | 1.14 | | 1.70 | 0.045 | | 0.067 |
| L3 | 2.65 | | 2.95 | 0.104 | | 0.116 |
| V1 | | 45° | | | 45° | |

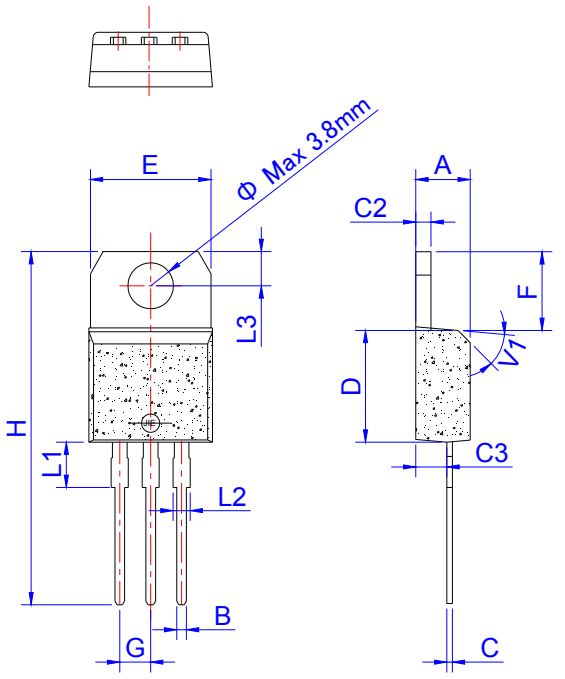


TO-220B Non-Ins

| Ref. | Dimensions | | | | | |
|---|---|---|---|---|---|---|
| | Millimeters | | | Inches | | |
| | Min. | Typ. | Max. | Min. | Typ. | Max. |
| A | 4.40 | | 4.60 | 0.173 | | 0.181 |
| B | 0.61 | | 0.88 | 0.024 | | 0.035 |
| C | 0.46 | | 0.70 | 0.018 | | 0.028 |
| C2 | 1.21 | | 1.32 | 0.048 | | 0.052 |
| C3 | 2.40 | | 2.72 | 0.094 | | 0.107 |
| D | 8.60 | | 9.70 | 0.339 | | 0.382 |
| E | 9.60 | | 10.4 | 0.378 | | 0.409 |
| F | 6.20 | | 6.60 | 0.244 | | 0.260 |
| G | | 2.54 | | | 0.1 | |
| H | 28.0 | | 29.8 | 1.102 | | 1.173 |
| L1 | | 3.75 | | | 0.148 | |
| L2 | 1.14 | | 1.70 | 0.045 | | 0.067 |
| L3 | 2.65 | | 2.95 | 0.104 | | 0.116 |
| V1 | | 45° | | | 45° | |

## PACKAGE MECHANICAL DATA

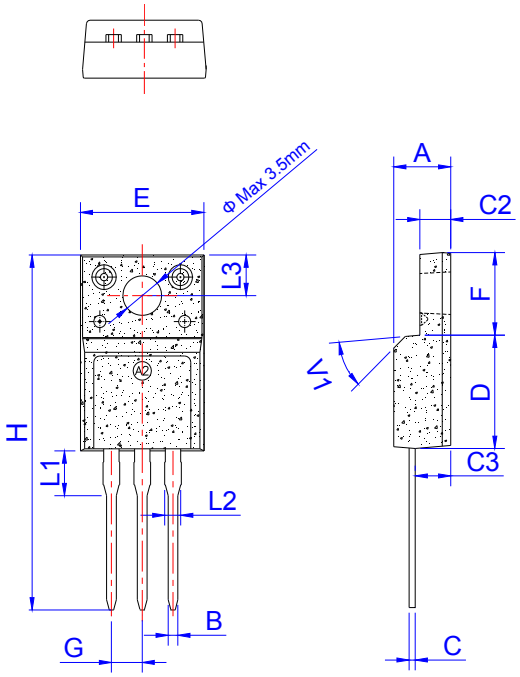


TO-220F Ins

| Ref. | Dimensions | | | | | |
|---|---|---|---|---|---|---|
| | Millimeters | | | Inches | | |
| | Min. | Typ. | Max. | Min. | Typ. | Max. |
| A | 4.50 | | 4.90 | 0.177 | | 0.193 |
| B | 0.74 | 0.80 | 0.83 | 0.029 | 0.031 | 0.033 |
| C | 0.47 | | 0.65 | 0.019 | | 0.026 |
| C2 | 2.45 | | 2.75 | 0.096 | | 0.108 |
| C3 | 2.60 | | 3.00 | 0.102 | | 0.118 |
| D | 8.80 | | 9.30 | 0.346 | | 0.366 |
| E | 9.80 | | 10.4 | 0.386 | | 0.410 |
| F | 6.40 | | 6.80 | 0.252 | | 0.268 |
| G | | 2.54 | | | 0.1 | |
| H | 28.0 | | 29.8 | 1.102 | | 1.173 |
| L1 | | 3.63 | | | 0.143 | |
| L2 | 1.14 | | 1.70 | 0.045 | | 0.067 |
| L3 | | 3.30 | | | 0.130 | |
| V1 | | 45° | | | 45° | |

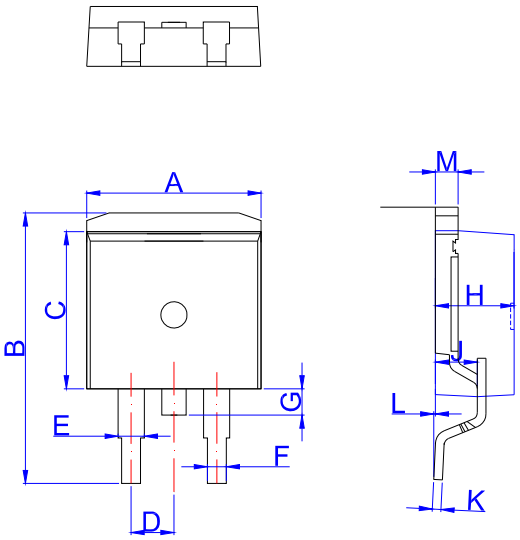


TO-263

| Ref. | Dimensions | | | | | |
|---|---|---|---|---|---|---|
| | Millimeters | | | Inches | | |
| | Min. | Typ. | Max. | Min. | Typ. | Max. |
| A | 9.90 | | 10.20 | 0.390 | | 0.402 |
| B | 14.70 | | 15.80 | 0.579 | | 0.622 |
| C | 9.4 | | 9.6 | 0.37 | | 0.378 |
| D | | 2.54 | | | 0.100 | |
| E | 1.20 | | 1.40 | 0.047 | | 0.055 |
| F | 0.75 | | 0.85 | 0.029 | | 0.033 |
| G | | | 1.75 | | | 0.069 |
| H | 4.40 | | 4.70 | 0.173 | | 0.185 |
| J | 2.30 | | 2.70 | 0.091 | | 0.106 |
| K | 0.38 | | 0.55 | 0.015 | | 0.022 |
| L | 0 | 0.10 | 0.25 | 0 | 0.004 | 0.010 |
| M | 1.25 | | 1.35 | 0.049 | | 0.053 |

**FIG.1** Maximum power dissipation versus RMS on-state current

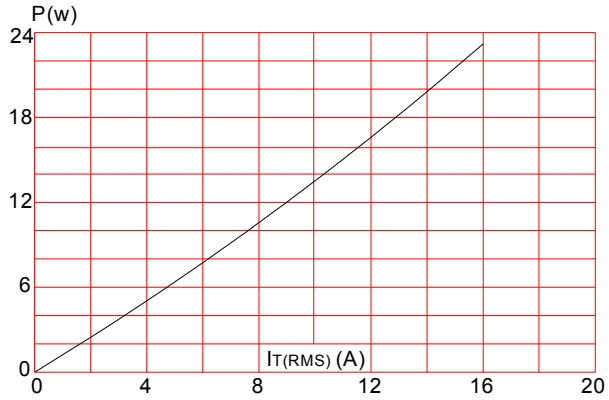


**FIG.2:** RMS on-state current versus case temperature

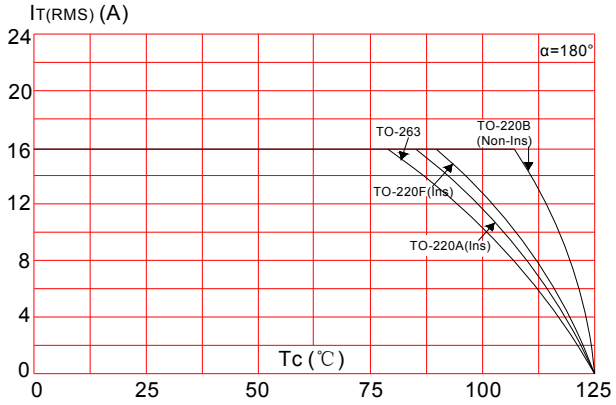


**FIG.3:** Surge peak on-state current versus number of cycles

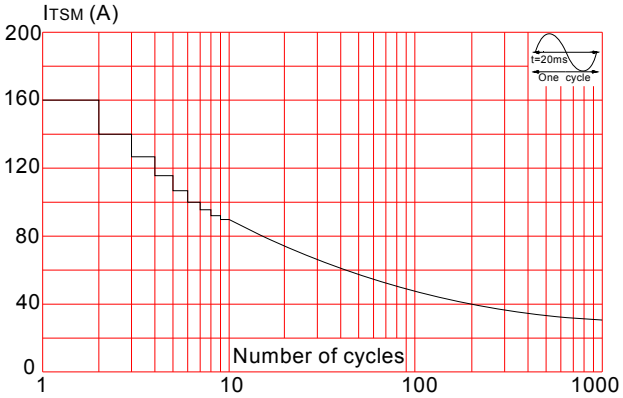


**FIG.4:** On-state characteristics (maximum values)

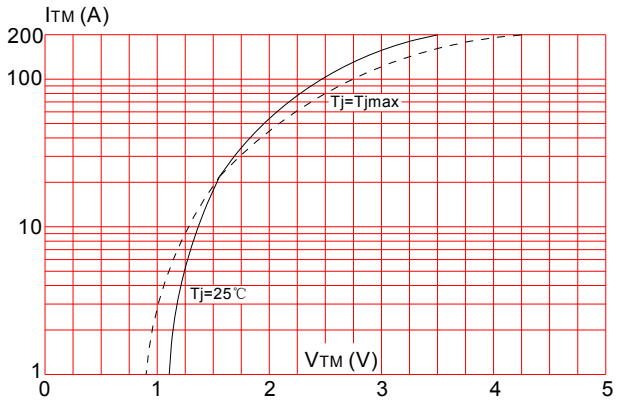


**FIG.5:** Non-repetitive surge peak on-state current for a sinusoidal pulse with width tp<20ms, and corresponging value of $I^2t$ (dI/dt < 50A/μs)

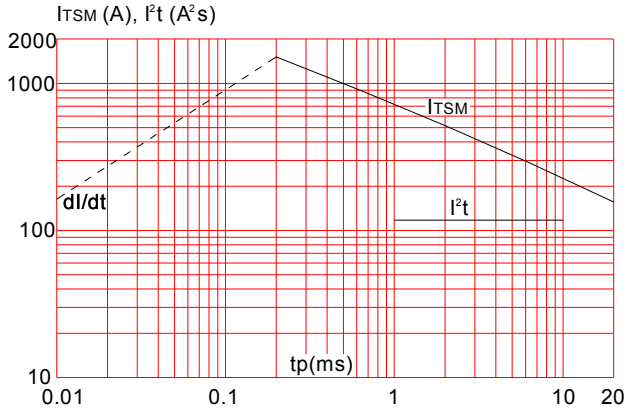


**FIG.6:** Relative variations of gate trigger current, holding current and latching current versus junction temperature

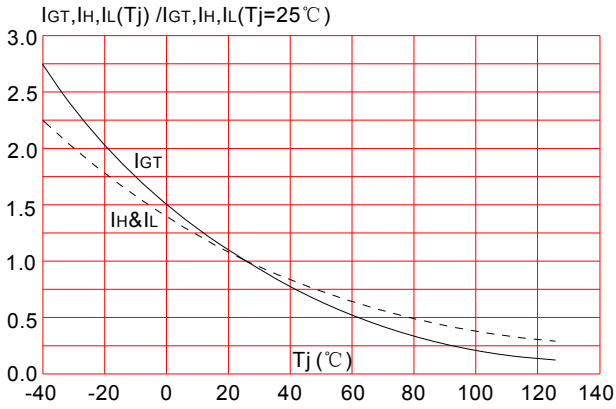

Information furnished in this document is believed to be accurate and reliable. However, Jiangsu JieJie Microelectronics Co.,Ltd assumes no responsibility for the consequences of use without consideration for such information nor use beyond it.
Information mentioned in this document is subject to change without notice, apart from that when an agreement is signed, Jiangsu JieJie complies with the agreement.
Products and information provided in this document have no infringement of patents. Jiangsu JieJie assumes no responsibility for any infringement of other rights of third parties which may result from the use of such products and information.
This document is the fifth version which is made in 23-Feb.-2018. This document supersedes and replaces all information previously supplied.

is a registered trademark of Jiangsu JieJie Microelectronics Co.,Ltd.
Copyright ©2018 Jiangsu JieJie Microelectronics Co.,Ltd. Printed All rights reserved.