Mallory Sonalert Products,Inc.

Part #: **JR16-RG-4MCT1**

Sales Outline Drawing

Revision: **A**

Specifications:

Sound Level Category	Medium	
Mode of Operation	Continuous	
Voltage Rating	9 to 16 VDC	
Frequency	3900 ± 500 Hz	
Loudness @ 1M	70 to 75 dB(A) Typ.	
Sound Current Draw	40mA MAX	
Stack Level	BOTTOM	TOP
LED Color	GREEN	RED
LED Current Draw	25mA max	60mA MAX
Total Max Current Draw	125mA MAX	
Housing Material	6/6 Nylon, Color: Black	
Top Cap / Lens Material	6/6 Nylon, Color: Opaque White	
Storage Temperature	-40° to +70° C	
Operating Temperature	-30° to +60° C	
Mounting	Recommended hole size is 22.5 mm.	
Knurled Nut	The max recommended torque is 10 in-lbs.	
Cable	Gray, UL Style 21894, 300V, 105°C, 24AWG, Pb-Free Tinned Leads	
Weight (Typical)	108 grams	
NEMA 12	Approved with use of included gasket.	
Options	Please contact factory.	

Dimensions: Inches (mm)

cUL Recognized **ROHS Compliant**

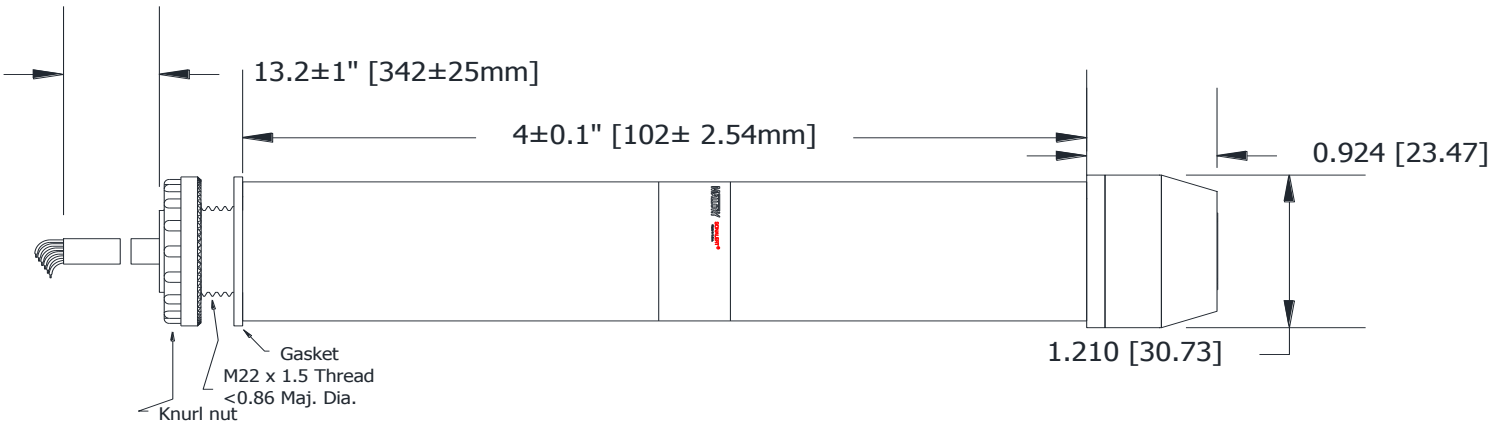

Connections:

SOUND	BLACK wire to Ground and ORANGE wire to Positive
BOTTOM	BROWN wire to Ground and GREEN wire to Positive
TOP	BROWN wire to Ground and RED wire to Positive

4411 South High School Road, Indianapolis, Indiana 46241 U.S.A · Phone: (317) 612-1000 Fax: (317) 612-1010 www.mspindy.com