Part Number: JP-5869-C
Description: Contact Clip with Circle Bed of Nails
1108

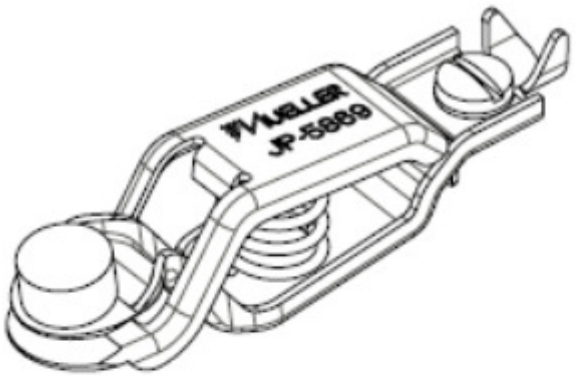

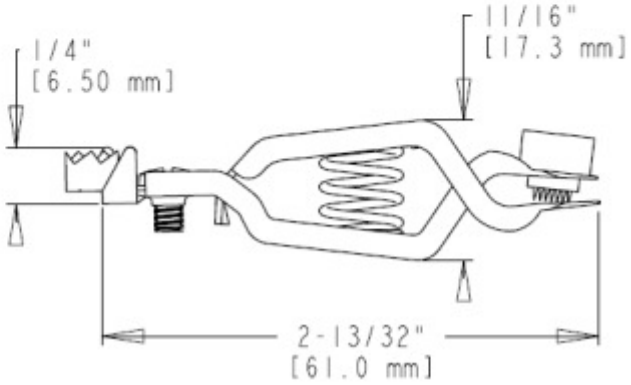

- Contact Clip with Bed of Nails
- Mueller – J.S.Popper brand
- Jaw opens 0.52” (13.2 mm)
- Uses bed of nails in circular orientation to pierce insulation
- Material: steel, zinc plated
- Length: 2.4” (61.0 mm)
- RoHS Compliant

Mueller Electric Company
1625 E. 31st Street
Cleveland, Ohio 44114
ISO 9001:2000
Over 95 Years Of Innovation
www.muellerelectric.com
TEL. 800-955-2629
TEL. 216-771-5225
FAX. 216-771-3068