LM101AJAN Operational Amplifiers

Check for Samples: LM101AJAN

FEATURES

- **Offset Voltage 3 mV Maximum Over Temperature**
- **Input Current 100 nA Maximum Over Temperature**
- **Offset Current 20 nA Maximum Over Temperature**
- **Ensured Drift Characteristics**
- **Offsets Ensured Over Entire Common Mode and Supply Voltage Ranges**
- **Slew Rate of 10 V/µS as a Summing Amplifier**

DESCRIPTION

The LM101A is a general purpose operational amplifier which features improved performance over industry standards such as the LM709. Advanced processing techniques make possible an order of magnitude reduction in input currents, and a redesign of the biasing circuitry reduces the temperature drift of input current. Improved specifications include:

- Offset voltage 3 mV maximum over temperature
- Input current 100 nA maximum over temperature
- Offset current 20 nA maximum over temperature
- Ensured drift characteristics
- Offsets ensured over entire common mode and supply voltage ranges
- Slew rate of 10V/µs as a summing amplifier

Please be aware that an important notice concerning availability, standard warranty, and use in critical applications of Texas Instruments semiconductor products and disclaimers thereto appears at the end of this data sheet.

All trademarks are the property of their respective owners.

PRODUCTION DATA information is current as of publication date. Products conform to specifications per the terms of the Texas Instruments standard warranty. Production processing does not necessarily include testing of all parameters.

Copyright © 2006–2013, Texas Instruments Incorporated

This amplifier offers many features which make its application nearly foolproof: overload protection on the input and output, no latch-up when the common mode range is exceeded, and freedom from oscillations and compensation with a single 30 pF capacitor. It has advantages over internally compensated amplifiers in that the frequency compensation can be tailored to the particular application. For example, in low frequency circuits it can be overcompensated for increased stability margin. Or the compensation can be optimized to give more than a factor of ten improvement in high frequency performance for most applications.

In addition, the device provides better accuracy and lower noise in high impedance circuitry. The low input currents also make it particularly well suited for long interval integrators or timers, sample and hold circuits and low frequency waveform generators. Further, replacing circuits where matched transistor pairs buffer the inputs of conventional IC op amps, it can give lower offset voltage and a drift at a lower cost.

Schematic

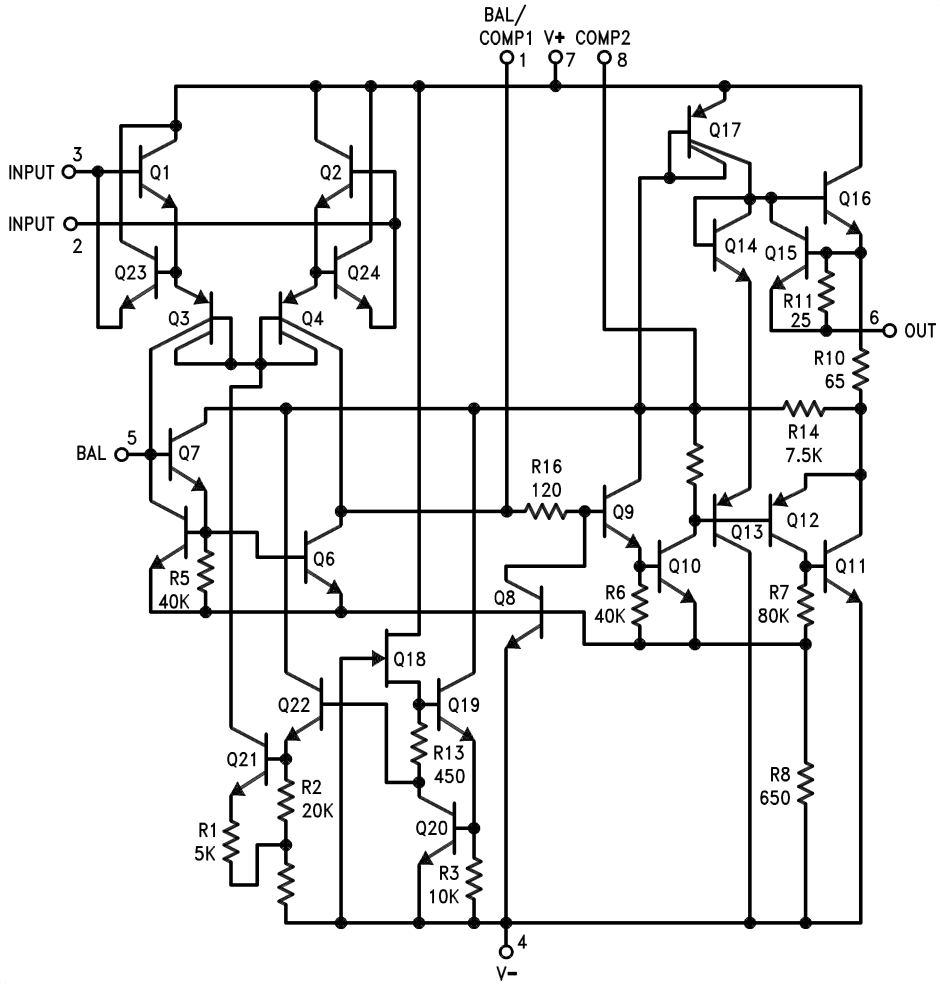

Pin connections shown are for 8-pin packages

Connection Diagrams

Copyright © 2006–2013, Texas Instruments Incorporated

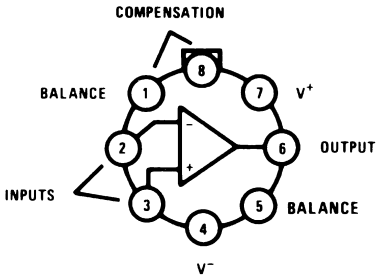

Pin 4 connected to case.

Figure 1. (Top View)
TO-99 Package
See Package Number LMC

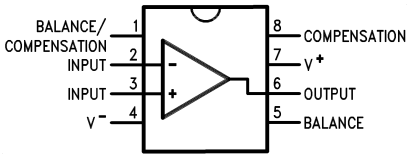

Figure 2. (Top View)
CDIP Package
See Package Number NAB0008A

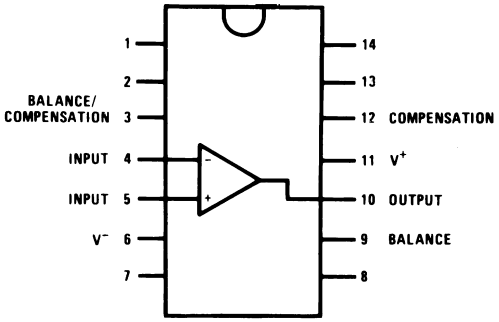

Figure 3. (Top View)
CDIP Package
See NS Package Number J

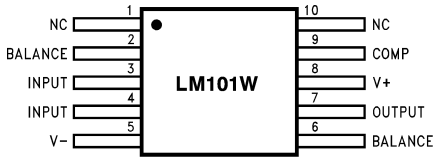

Figure 4. (Top View)
CLGA Package
See NS Package Number NAD0010A

Fast AC/DC Converter

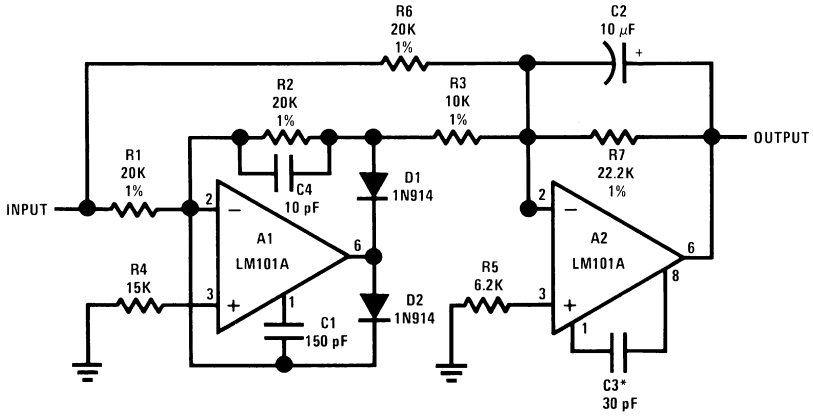

Feedforward compensation can be used to make a fast full wave rectifier without a filter.

These devices have limited built-in ESD protection. The leads should be shorted together or the device placed in conductive foam during storage or handling to prevent electrostatic damage to the MOS gates.

Copyright © 2006–2013, Texas Instruments Incorporated

Absolute Maximum Ratings[1]

Supply Voltage				±22V
Differential Input Voltage				±30V
Input Voltage[2]				±15V
Output Short Circuit Duration				Continuous
Operating Ambient Temp. Range				−55°C ≤ T_A ≤ +125°C
T_J Max				150°C
Power Dissipation at T_A = 25°C[3]	LMC-Package		Still Air)	750 mW
			(500 LF / Min Air Flow)	1,200 mW
	NAB0008A-Package		(Still Air)	1,000 mW
			(500 LF / Min Air Flow)	1,500 mW
	J-Package		(Still Air)	1,200mW
			(500 LF / Min Air Flow)	2,000mW
	NAD0010A-Package		(Still Air)	500mW
			(500 LF / Min Air Flow)	800mW
Thermal Resistance	θ_{JA}	LMC-Package	(Still Air)	165°C/W
			(500 LF / Min Air Flow)	89°C/W
		NAB0008A-Package	(Still Air)	128°C/W
			(500 LF / Min Air Flow)	75°C/W
		J-Package	(Still Air)	98°C/W
			(500 LF / Min Air Flow)	59°C/W
		NAD0010A-Package	(Still Air)	233°C/W
			(500 LF / Min Air Flow)	155°C/W
	θ_{JC} (Typical)	LMC-Package		39°C/W
		NAB0008A-Package		26°C/W
		J-Package		24°C/W
		NAD0010A-Package		26°C/W
Storage Temperature Range				−65°C ≤ T_A ≤ +150°C
Lead Temperature (Soldering, 10 sec.)				300°C
ESD Tolerance[4]				3000V

(1) Absolute Maximum Ratings indicate limits beyond which damage to the device may occur. Operating ratings indicate conditions for which the device is intended to be functional, but do no ensure specific performance limits. For ensured specifications and test conditions, see the Electrical Characteristics. The ensured specifications apply only for the test conditions listed. Some performance characteristics may degrade when the device is not operated under the listed test conditions.

(2) For supply voltages less than ±15V, the absolute maximum input voltage is equal to the supply voltage.

(3) The maximum power dissipation must be derated at elevated temperatures and is dictated by T_{Jmax} (maximum junction temperature), θ_{JA} (package junction to ambient thermal resistance), and T_A (ambient temperature). The maximum allowable power dissipation at any temperature is $P_{Dmax} = (T_{Jmax} - T_A) / \theta_{JA}$ or the number given in the Absolute Maximum Ratings, whichever is lower.

(4) Human body model, 100 pF discharged through 1.5 kΩ.

Copyright © 2006–2013, Texas Instruments Incorporated

Quality Conformance Inspection

Mil-Std-883, Method 5005 - Group A

Subgroup	Description	Temp (°C)
1	Static tests at	25
2	Static tests at	125
3	Static tests at	-55
4	Dynamic tests at	25
5	Dynamic tests at	125
6	Dynamic tests at	-55
7	Functional tests at	25
8A	Functional tests at	125
8B	Functional tests at	-55
9	Switching tests at	25
10	Switching tests at	125
11	Switching tests at	-55

LM101JAN Electrical Characteristics DC Parameters

The following conditions apply to all parameters, unless otherwise specified
V_{CC} = ±20V, V_{CM} = 0V, R_S = 50Ω

Symbol	Parameters	Conditions	Notes	Min	Max	Unit	Sub-groups
V_{IO}	Input Offset Voltage	$+V_{CC}$ = 35V, $-V_{CC}$ = -5V, V_{CM} = -15V		-2.0	+2.0	mV	1
				-3.0	+3.0	mV	2, 3
		$+V_{CC}$ = 5V, $-V_{CC}$ = -35V, V_{CM} = +15V		-2.0	+2.0	mV	1
				-3.0	+3.0	mV	2, 3
		V_{CM} = 0V		-2.0	+2.0	mV	1
				-3.0	+3.0	mV	2, 3
		$+V_{CC}$ = 5V, $-V_{CC}$ = -5V, V_{CM} = 0V		-2.0	+2.0	mV	1
				-3.0	+3.0	mV	2, 3
I_{IO}	Input Offset Current	$+V_{CC}$ = 35V, $-V_{CC}$ = -5V, V_{CM} = -15V, R_S = 100KΩ		-10	+10	nA	1, 2
				-20	+20	nA	3
		$+V_{CC}$ = 5V, $-V_{CC}$ = -35V, V_{CM} = +15V, R_S = 100KΩ		-10	+10	nA	1, 2
				-20	+20	nA	3
		V_{CM} = 0V, R_S = 100KΩ		-10	+10	nA	1, 2
				-20	+20	nA	3
		$+V_{CC}$ = 5V, $-V_{CC}$ = -5V, V_{CM} = 0V, R_S = 100KΩ		-10	+10	nA	1, 2
				-20	+20	nA	3
$\pm I_{IB}$	Input Bias Current	$+V_{CC}$ = 35V, $-V_{CC}$ = -5V, V_{CM} = -15V, R_S = 100KΩ		-0.1	75	nA	1, 2
				-0.1	100	nA	3
		$+V_{CC}$ = 5V, $-V_{CC}$ = -35V, V_{CM} = +15V, R_S = 100KΩ		-0.1	75	nA	1, 2
				-0.1	100	nA	3
		V_{CM} = 0V, R_S = 100KΩ		-0.1	75	nA	1, 2
				-0.1	100	nA	3
		$+V_{CC}$ = 5V, $-V_{CC}$ = -5V, V_{CM} = 0V, R_S = 100KΩ		-0.1	75	nA	1, 2
				-0.1	100	nA	3
+PSRR	Power Supply Rejection Ratio	$+V_{CC}$ = 10V, $-V_{CC}$ = -20V		-50	+50	µV/V	1
				-100	+100	µV/V	2, 3
-PSRR	Power Supply Rejection Ratio	$+V_{CC}$ = 20V, $-V_{CC}$ = -10V		-50	+50	µV/V	1
				-100	+100	µV/V	2, 3

Copyright © 2006–2013, Texas Instruments Incorporated

LM101JAN Electrical Characteristics DC Parameters (continued)

The following conditions apply to all parameters, unless otherwise specified
V_{CC} = ±20V, V_{CM} = 0V, R_S = 50Ω

Symbol	Parameters	Conditions	Notes	Min	Max	Unit	Sub-groups
CMRR	Common Mode Rejection Ratio	V_{CC} = ±35V to ±5V, V_{CM} = ±15V		80		dB	1, 2, 3
$+V_{IO}$ Adj	Adjustment for Input Offset Voltage			4.0		mV	1, 2, 3
$-V_{IO}$ Adj	Adjustment for Input Offset Voltage				-4.0	mV	1, 2, 3
$+I_{OS}$	Output Short Circuit Current	$+V_{CC}$ = 15V, $-V_{CC}$ = -15V, t ≤ 25mS, V_{CM} = -15V		-60		mA	1, 2, 3
$-I_{OS}$	Output Short Circuit Current	$+V_{CC}$ = 15V, $-V_{CC}$ = -15V, t ≤ 25mS, V_{CM} = +15V			+60	mA	1, 2, 3
I_{CC}	Power Supply Current	$+V_{CC}$ = 15V, $-V_{CC}$ = -15V			3.0	mA	1
					2.32	mA	2
					3.5	mA	3
ΔV_{IO} / ΔT	Temperature Coefficient of Input Offset Voltage	-55°C ≤ T_A ≤ +25°C	See (1)	-18	+18	µV/°C	2
		+25°C ≤ T_A ≤ +125°C	See (1)	-15	+15	µV/°C	3
Δ I_{IO} / ΔT	Temperature Coefficient of Input Offset Current	-55°C ≤ T_A ≤ +25°C	See (2)	-200	+200	pA/°C	2
		+25°C ≤ T_A ≤ +125°C	See (2)	-100	+100	pA/°C	3
$-A_{VS}$	Large Signal (Open Loop) Voltage Gain	R_L = 2KΩ, V_O = -15V	See (3)	50		V/mV	4
			See (3)	25		V/mV	5, 6
		R_L = 10KΩ, V_O = -15V	See (3)	50		V/mV	4
			See (3)	25		V/mV	5, 6
$+A_{VS}$	Large Signal (Open Loop) Voltage Gain	R_L = 2KΩ, V_O = +15V	See (3)	50		V/mV	4
			See (3)	25		V/mV	5, 6
		R_L = 10KΩ, V_O = +15V	See (3)	50		V/mV	4
			See (3)	25		V/mV	5, 6
A_{VS}	Large Signal (Open Loop) Voltage Gain	V_{CC} = ±5V, R_L = 2KΩ, V_O = ±2V	See (3)	10		V/mV	4, 5, 6
		V_{CC} = ±5V, R_L = 10KΩ, V_O = ±2V	See (3)	10		V/mV	4, 5, 6
$+V_{OP}$	Output Voltage Swing	R_L = 10KΩ, V_{CM} = -20V		+16		V	4, 5, 6
		R_L = 2KΩ, V_{CM} = -20V		+15		V	4, 5, 6
$-V_{OP}$	Output Voltage Swing	R_L = 10KΩ, V_{CM} = 20V			-16	V	4, 5, 6
		R_L = 2KΩ, V_{CM} = 20V			-15	V	4, 5, 6

(1) Calculated parameter
(2) Calculated parameter
(3) Datalog reading of K = V/mV.

Copyright © 2006–2013, Texas Instruments Incorporated

LM101AJAN Electrical Characteristics AC Parameters

The following conditions apply to all parameters, unless otherwise specified
V_{CC} = ±20V, V_{CM} = 0V, R_S = 50Ω

Symbol	Parameter	Conditions	Notes	Min	Max	Units	Sub-groups
+SR	Slew Rate	A_V = 1, V_I = -5V to +5V		0.3		V/µS	7
-SR	Slew Rate	A_V = 1, V_I = +5V to -5V		0.3		V/µS	7
TR_{TR}	Rise Time	A_V = 1, V_I = 50mV			800	nS	7
TR_{OS}	Overshoot	A_V = 1, V_I = 50mV			25	%	7
NI_{BB}	Noise Broadband	BW = 10Hz to 5KHz, R_S = 0Ω			15	μV_{RMS}	7
NI_{PC}	Noise Popcorn	BW = 10Hz to 5KHz, R_S = 100KΩ			80	μV_{PK}	7

LM101AJAN Electrical Characteristics DC Parameters: Drift Values

The following conditions apply to all parameters, unless otherwise specified
V_{CC} = ±20V, V_{CM} = 0V, R_S = 50Ω
Delta calculations performed on JAN S devices at group B, Subgroup 5 only.

Symbol	Parameter	Conditions	Notes	Min	Max	Units	Sub-groups
V_{IO}	Input Offset Voltage	V_{CM} = 0V		-0.5	0.5	mV	1
± I_{IB}	Input Bias Current	V_{CM} = 0V, R_S = 100KΩ		-7.5	7.5	nA	1

Copyright © 2006–2013, Texas Instruments Incorporated

Typical Performance Characteristics LM101A

Input Voltage Range

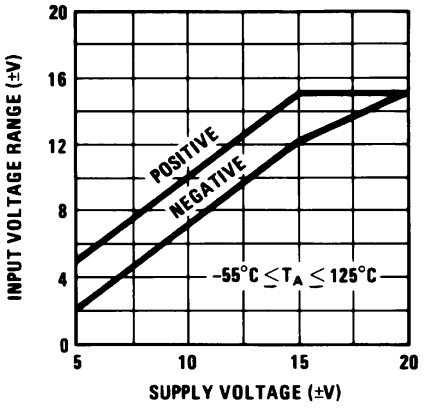

Figure 5.

Output Swing

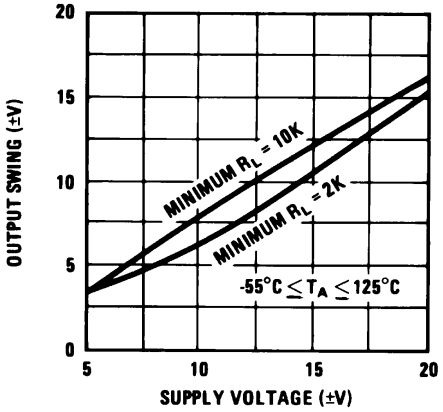

Figure 6.

Voltage Gain

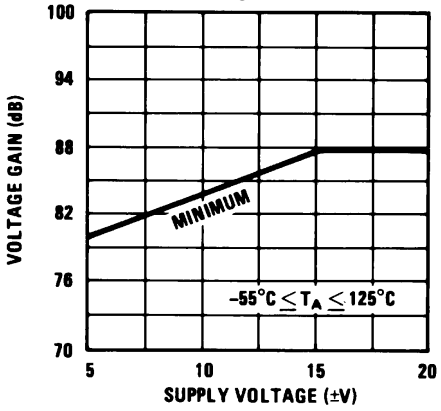

Figure 7.

Supply Current

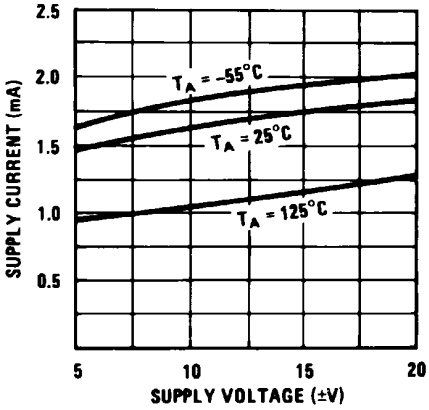

Figure 8.

Voltage Gain

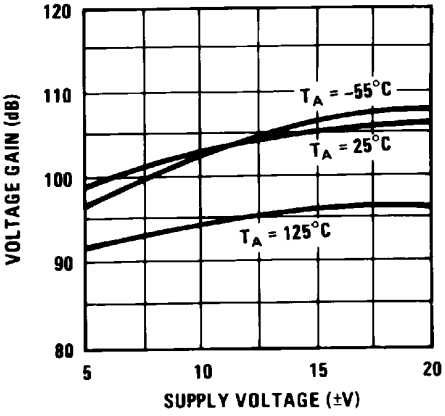

Figure 9.

Maximum Power Dissipation

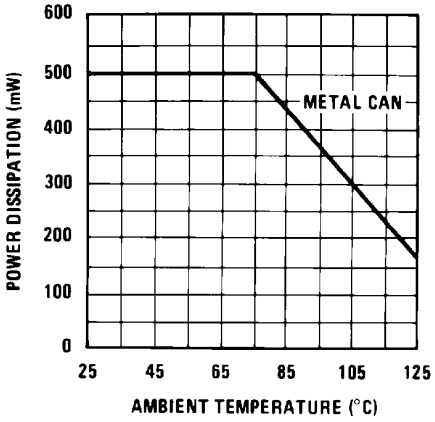

Figure 10.

Copyright © 2006–2013, Texas Instruments Incorporated

Typical Performance Characteristics LM101A (continued)

Input Current, LM101A

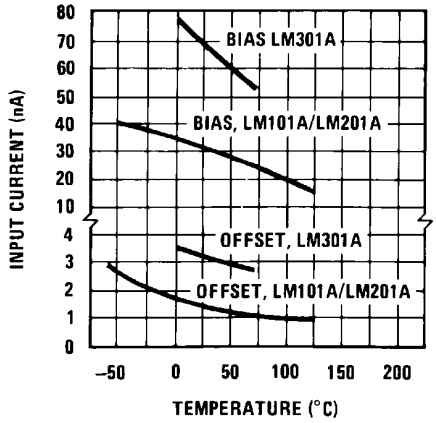

Figure 11.

Input Noise Voltage

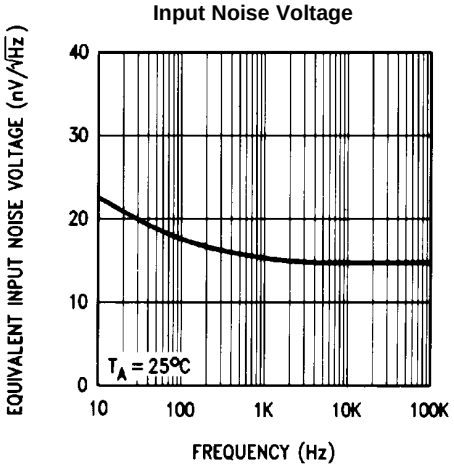

Figure 12.

Input Noise Current

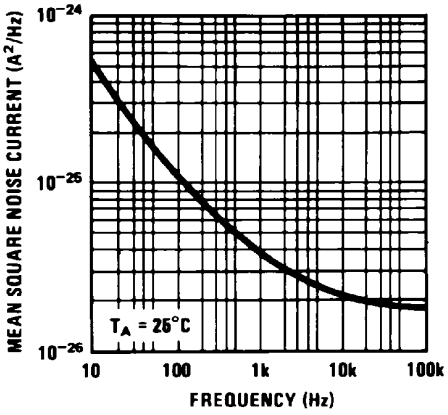

Figure 13.

Common Mode Rejection

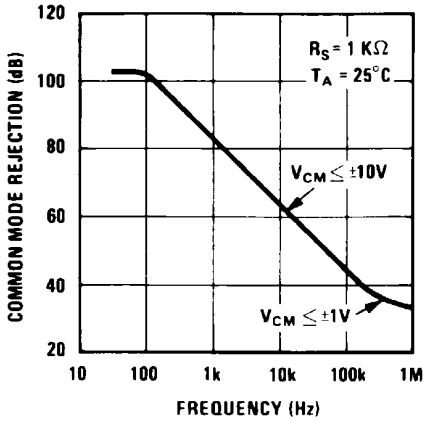

Figure 14.

Power Supply Rejection

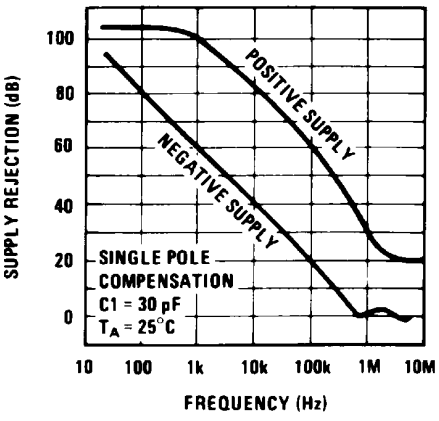

Figure 15.

Closed Loop Output Impedance

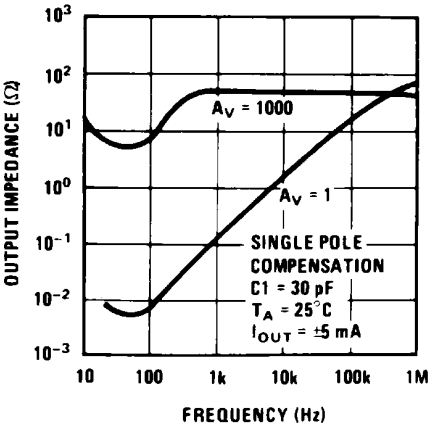

Figure 16.

Copyright © 2006–2013, Texas Instruments Incorporated

Typical Performance Characteristics for Various Compensation Circuits[1]

Single Pole Compensation

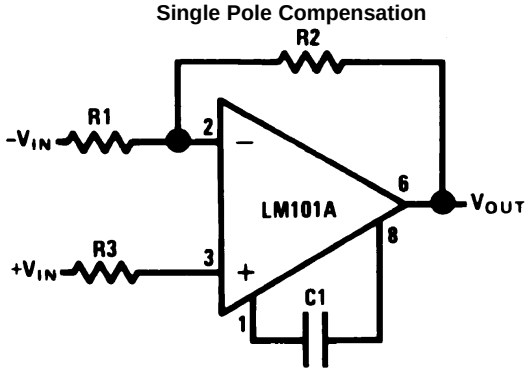

$$C1 \geq \frac{R1\,C_S}{R1 + R2}$$

C_S= 30 pF

Figure 17.

Two Pole Compensation

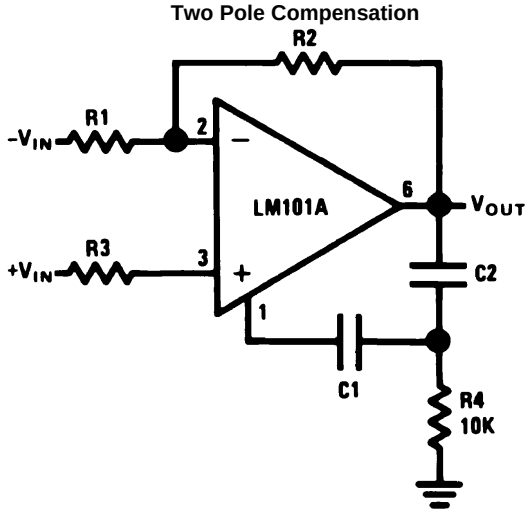

$$C1 \geq \frac{R1\,C_S}{R1 + R2}$$

C_S= 30 pF
C2 = 10 C1

Figure 18.

Feedforward Compensation

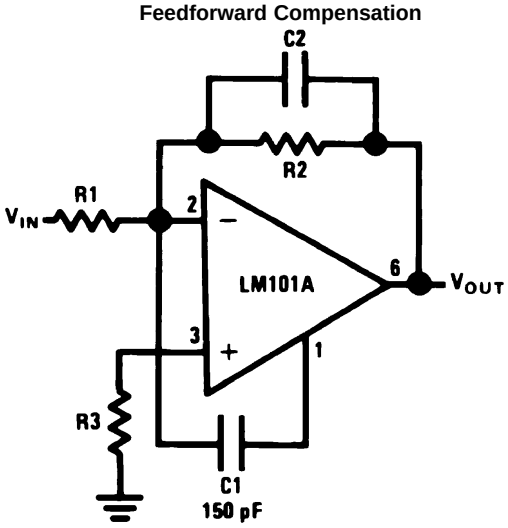

$$C2 = \frac{1}{2\pi\, f_o\, R2}$$

f_o= 3 MHz

Figure 19.

Open Loop Frequency Response

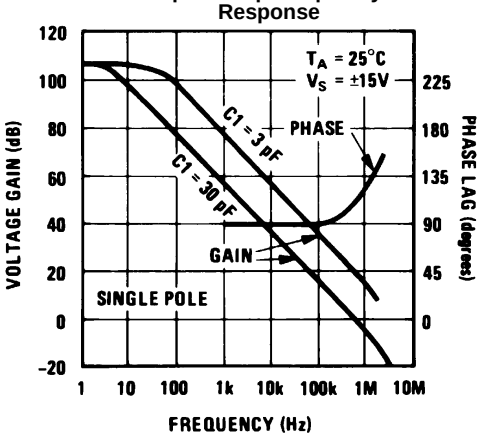

Figure 20.

(1) Pin connections shown are for 8-pin packages.

Copyright © 2006–2013, Texas Instruments Incorporated

Typical Performance Characteristics for Various Compensation Circuits[1] (continued)

Open Loop Frequency Response

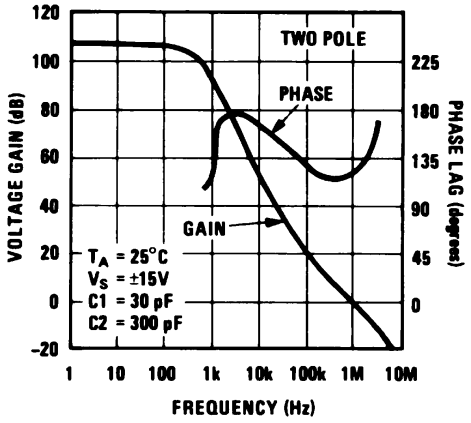

Figure 21.

Open Loop Frequency Response

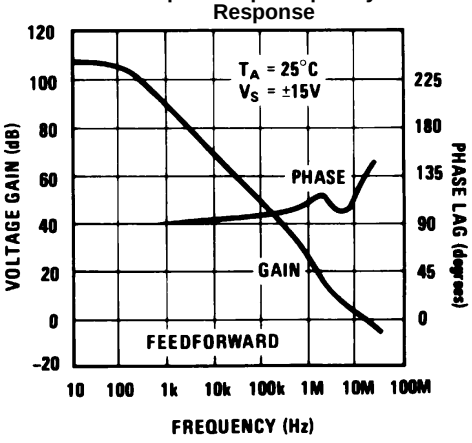

Figure 22.

Large Signal Frequency Response

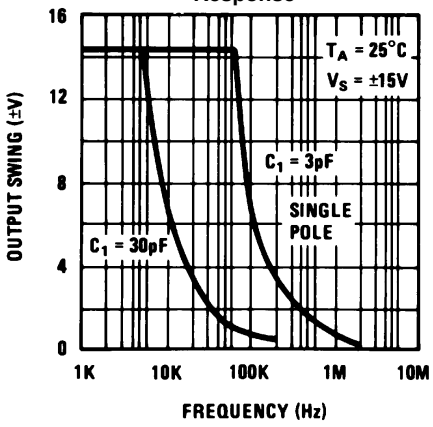

Figure 23.

Large Signal Frequency Response

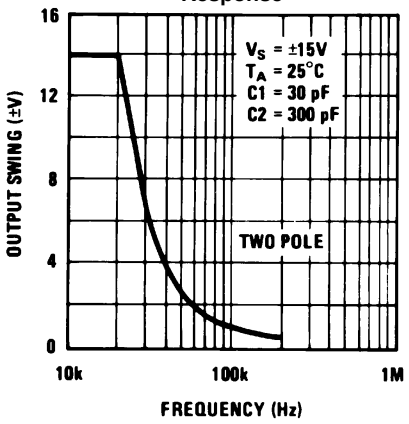

Figure 24.

Large Signal Frequency Response

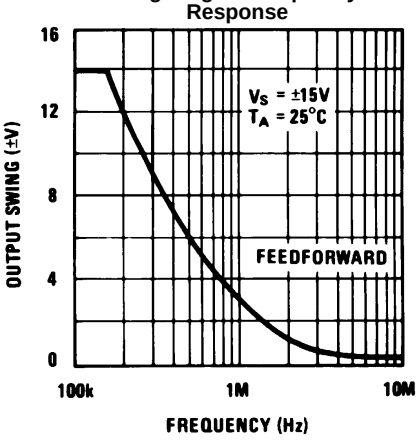

Figure 25.

Voltage Follower Pulse Response

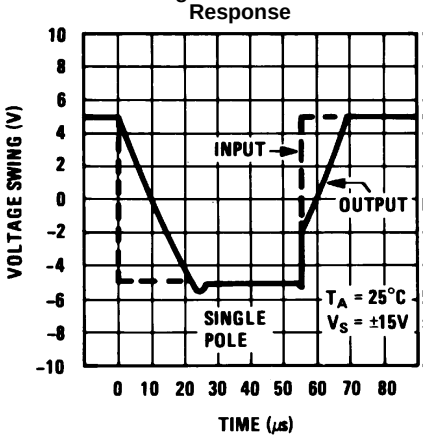

Figure 26.

Typical Performance Characteristics for Various Compensation Circuits[1] (continued)

Voltage Follower Pulse Response

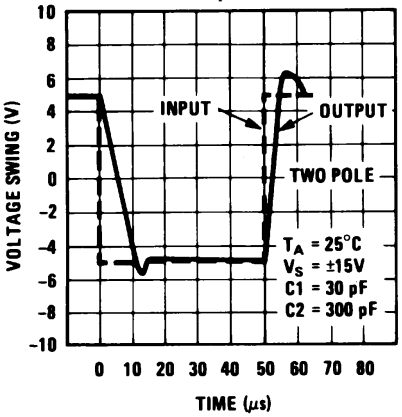

Figure 27.

Inverter Pulse Response

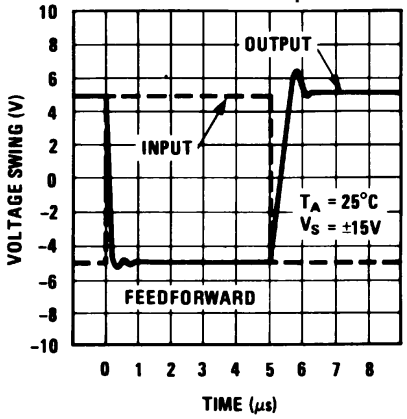

Figure 28.

Copyright © 2006–2013, Texas Instruments Incorporated

TYPICAL APPLICATIONS(2)

Variable Capacitance Multiplier

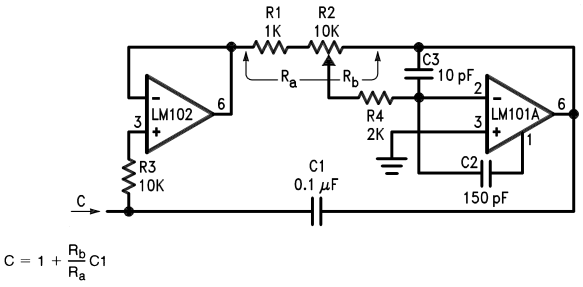

$C = 1 + \frac{R_b}{R_a} C1$

Inverting Amplifier with Balancing Circuit

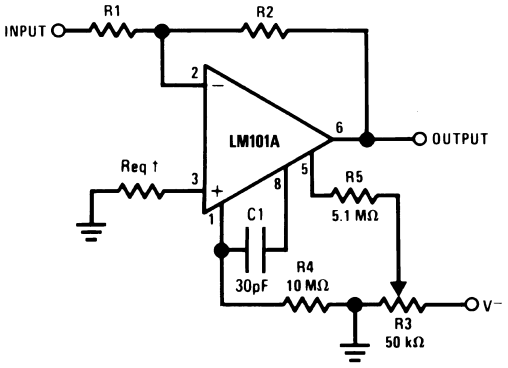

†May be zero or equal to parallel combination of R1 and R2 for minimum offset.

Simulated Inductor

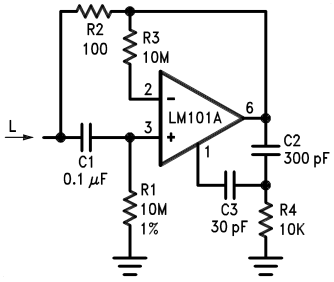

$L \simeq R1\ R2\ C1$

$R_S = R2$

$R_P = R1$

Sine Wave Oscillator

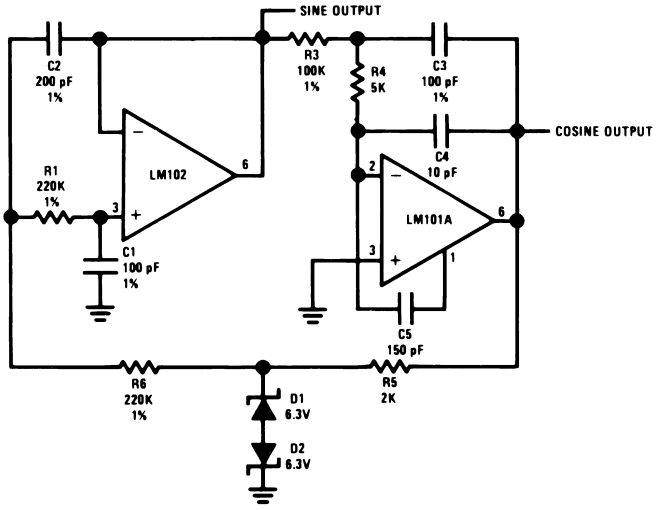

f_o = 10 kHz

Fast Inverting Amplifier with High Input Impedance

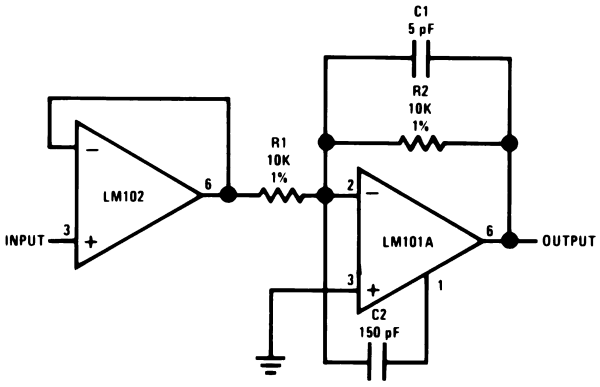

Integrator with Bias Current Compensation

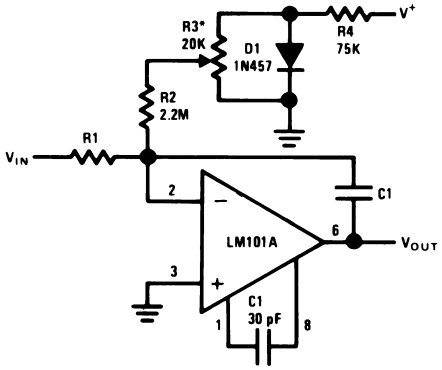

*Adjust for zero integrator drift. Current drift typically 0.1 nA/°C over −55°C to +125°C temperature range.

(2) Pin connections shown are for 8-pin packages.

Application Hints[2]

Protecting Against Gross Fault Conditions

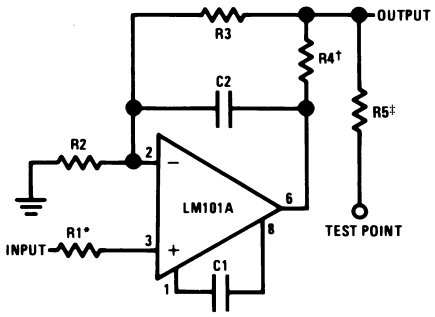

*Protects input
†Protects output
‡Protects output—not needed when R4 is used.

Compensating for Stray Input Capacitances or Large Feedback Resistor

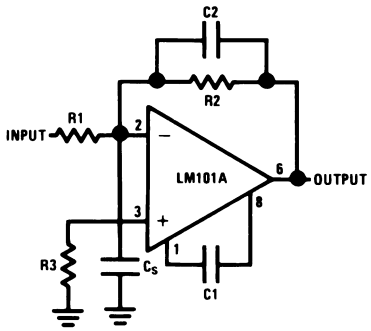

$$C2 = \frac{R1\,C_S}{R2}$$

Isolating Large Capacitive Loads

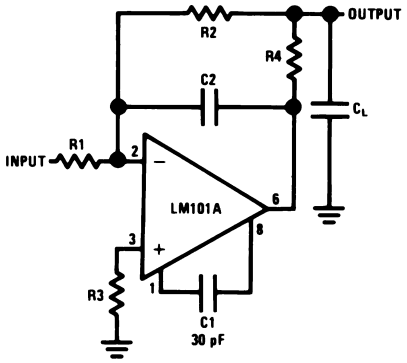

Although the LM101A is designed for trouble free operation, experience has indicated that it is wise to observe certain precautions given below to protect the devices from abnormal operating conditions. It might be pointed out that the advice given here is applicable to practically any IC op amp, although the exact reason why may differ with different devices.

Copyright © 2006–2013, Texas Instruments Incorporated

When driving either input from a low-impedance source, a limiting resistor should be placed in series with the input lead to limit the peak instantaneous output current of the source to something less than 100 mA. This is especially important when the inputs go outside a piece of equipment where they could accidentally be connected to high voltage sources. Large capacitors on the input (greater than 0.1 µF) should be treated as a low source impedance and isolated with a resistor. Low impedance sources do not cause a problem unless their output voltage exceeds the supply voltage. However, the supplies go to zero when they are turned off, so the isolation is usually needed.

The output circuitry is protected against damage from shorts to ground. However, when the amplifier output is connected to a test point, it should be isolated by a limiting resistor, as test points frequently get shorted to bad places. Further, when the amplifier drives a load external to the equipment, it is also advisable to use some sort of limiting resistance to preclude mishaps.

Precautions should be taken to insure that the power supplies for the integrated circuit never become reversed—even under transient conditions. With reverse voltages greater than 1V, the IC will conduct excessive current, fusing internal aluminum interconnects. If there is a possibility of this happening, clamp diodes with a high peak current rating should be installed on the supply lines. Reversal of the voltage between V^+ and V^- will always cause a problem, although reversals with respect to ground may also give difficulties in many circuits.

The minimum values given for the frequency compensation capacitor are stable only for source resistances less than 10 kΩ, stray capacitances on the summing junction less than 5 pF and capacitive loads smaller than 100 pF. If any of these conditions are not met, it becomes necessary to overcompensate the amplifier with a larger compensation capacitor. Alternately, lead capacitors can be used in the feedback network to negate the effect of stray capacitance and large feedback resistors or an RC network can be added to isolate capacitive loads.

Although the LM101A is relatively unaffected by supply bypassing, this cannot be ignored altogether. Generally it is necessary to bypass the supplies to ground at least once on every circuit card, and more bypass points may be required if more than five amplifiers are used. When feed-forward compensation is employed, however, it is advisable to bypass the supply leads of each amplifier with low inductance capacitors because of the higher frequencies involved.

Typical Applications(3)

Standard Compensation and Offset Balancing Circuit

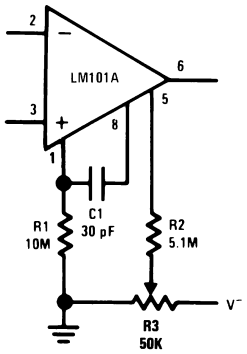

(3) Pin connections shown are for 8-pin packages.

Copyright © 2006–2013, Texas Instruments Incorporated

Fast Voltage Follower

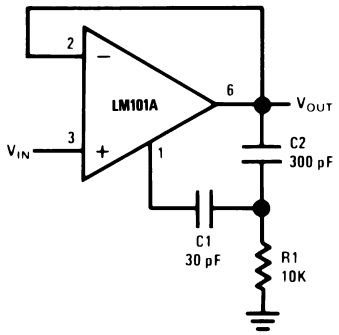

Power Bandwidth: 15 kHz
Slew Rate: 1V/µs

Fast Summing Amplifier

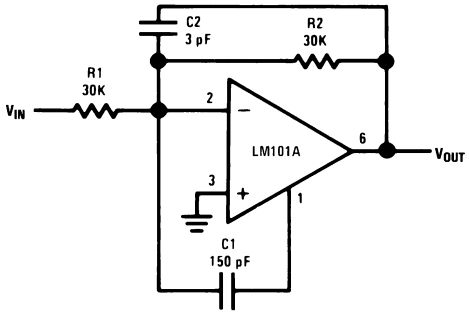

Power Bandwidth: 250 kHz
Small Signal Bandwiidth: 3.5 MHz
Slew Rate: 10V/µs

Bilateral Current Source

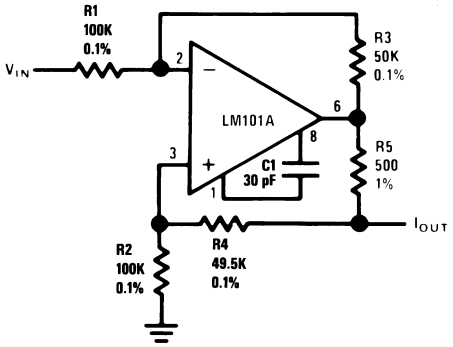

$$I_{OUT} = \frac{R3\ V_{IN}}{R1\ R5}$$

R3 = R4 + R5
R1 = R2

Copyright © 2006–2013, Texas Instruments Incorporated

Fast AC/DC Converter

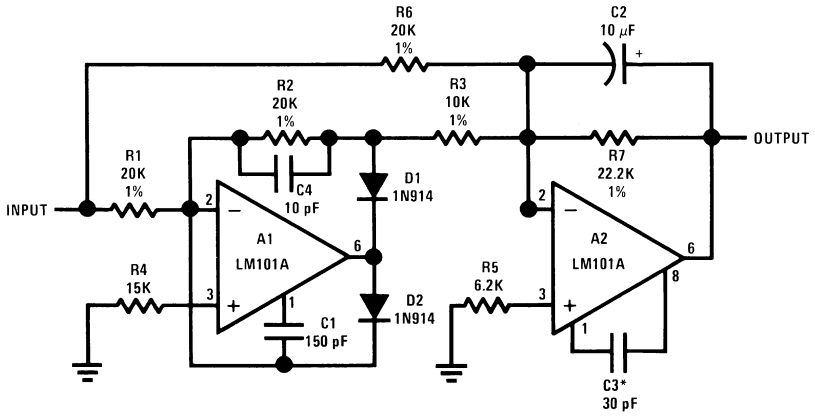

Feedforward compensation can be used to make a fast full wave rectifier without a filter.

Instrumentation Amplifier

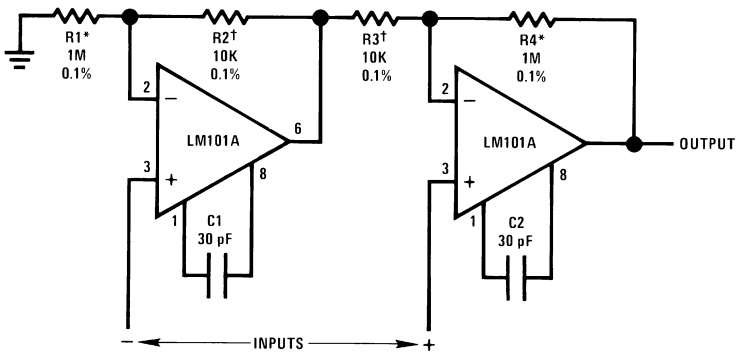

R1 = R4; R2 = R3

$A_V = 1 + \frac{R1}{R2}$

*,† Matching determines CMRR.

Integrator with Bias Current Compensation

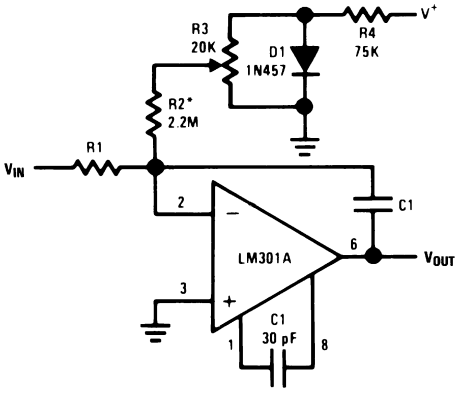

*Adjust for zero integrator drift. Current drift typically 0.1 nA/°C over 0°C to +70°C temperature range.

Voltage Comparator for Driving RTL Logic or High Current Driver

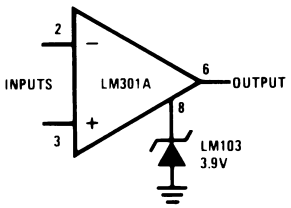

Low Frequency Square Wave Generator

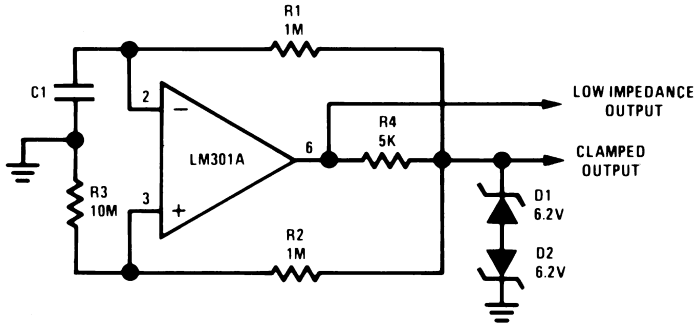

Low Drift Sample and Hold

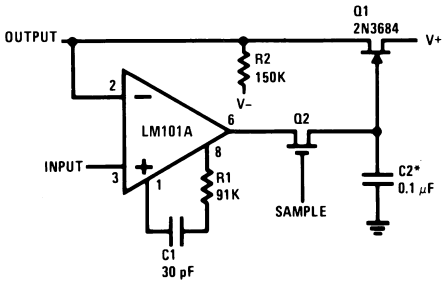

Voltage Comparator for Driving DTL or TTL Integrated Circuits

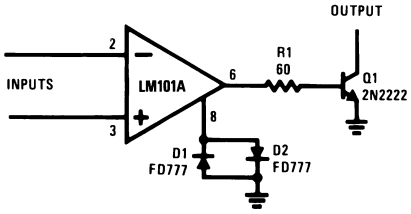

*Polycarbonate-dielectric capacitor

Copyright © 2006–2013, Texas Instruments Incorporated

REVISION HISTORY SECTION

Date Released	Revision	Section	Originator	Changes
01/05/06	A	New Release to corporate format	L. Lytle	1 MDS datasheets converted into one Corp. datasheet format. MJLM101A-X Rev 1A0 datasheet will be archived.
03/20/13	A	All	-	Changed layout of National Data Sheet to TI format

Copyright © 2006–2013, Texas Instruments Incorporated

PACKAGING INFORMATION

Orderable Device	Status (1)	Package Type	Package Drawing	Pins	Package Qty	Eco Plan (2)	Lead/Ball Finish	MSL Peak Temp (3)	Op Temp (°C)	Top-Side Markings (4)	Samples
JL101ABCA	ACTIVE	CDIP	J	14	25	TBD	Call TI	Call TI	-55 to 125	JL101ABCA JM38510/10103BCA Q	Samples
JL101ABGA	ACTIVE	TO-99	LMC	8	20	TBD	Call TI	Call TI	-55 to 125	JL101ABGA JM38510/10103BGA Q ACO JM38510/10103BGA Q >T	Samples
JL101ABPA	ACTIVE	CDIP	NAB	8	40	TBD	Call TI	Call TI	-55 to 125	JL101ABPA Q JM38510/ 10103BPA ACO 10103BPA >T	Samples
JM38510/10103BCA	ACTIVE	CDIP	J	14	25	TBD	Call TI	Call TI	-55 to 125	JL101ABCA JM38510/10103BCA Q	Samples
JM38510/10103BGA	ACTIVE	TO-99	LMC	8	20	TBD	Call TI	Call TI	-55 to 125	JL101ABGA JM38510/10103BGA Q ACO JM38510/10103BGA Q >T	Samples
JM38510/10103BPA	ACTIVE	CDIP	NAB	8	40	TBD	Call TI	Call TI	-55 to 125	JL101ABPA Q JM38510/ 10103BPA ACO 10103BPA >T	Samples
M38510/10103BCA	ACTIVE	CDIP	J	14	25	TBD	Call TI	Call TI	-55 to 125	JL101ABCA JM38510/10103BCA Q	Samples
M38510/10103BGA	ACTIVE	TO-99	LMC	8	20	TBD	Call TI	Call TI	-55 to 125	JL101ABGA JM38510/10103BGA Q ACO JM38510/10103BGA Q >T	Samples
M38510/10103BPA	ACTIVE	CDIP	NAB	8	40	TBD	Call TI	Call TI	-55 to 125	JL101ABPA Q JM38510/ 10103BPA ACO 10103BPA >T	Samples

(1) The marketing status values are defined as follows:
ACTIVE: Product device recommended for new designs.
LIFEBUY: TI has announced that the device will be discontinued, and a lifetime-buy period is in effect.

NRND: Not recommended for new designs. Device is in production to support existing customers, but TI does not recommend using this part in a new design.
PREVIEW: Device has been announced but is not in production. Samples may or may not be available.
OBSOLETE: TI has discontinued the production of the device.

(2) Eco Plan - The planned eco-friendly classification: Pb-Free (RoHS), Pb-Free (RoHS Exempt), or Green (RoHS & no Sb/Br) - please check http://www.ti.com/productcontent for the latest availability information and additional product content details.
TBD: The Pb-Free/Green conversion plan has not been defined.
Pb-Free (RoHS): TI's terms "Lead-Free" or "Pb-Free" mean semiconductor products that are compatible with the current RoHS requirements for all 6 substances, including the requirement that lead not exceed 0.1% by weight in homogeneous materials. Where designed to be soldered at high temperatures, TI Pb-Free products are suitable for use in specified lead-free processes.
Pb-Free (RoHS Exempt): This component has a RoHS exemption for either 1) lead-based flip-chip solder bumps used between the die and package, or 2) lead-based die adhesive used between the die and leadframe. The component is otherwise considered Pb-Free (RoHS compatible) as defined above.
Green (RoHS & no Sb/Br): TI defines "Green" to mean Pb-Free (RoHS compatible), and free of Bromine (Br) and Antimony (Sb) based flame retardants (Br or Sb do not exceed 0.1% by weight in homogeneous material)

(3) MSL, Peak Temp. -- The Moisture Sensitivity Level rating according to the JEDEC industry standard classifications, and peak solder temperature.

(4) Multiple Top-Side Markings will be inside parentheses. Only one Top-Side Marking contained in parentheses and separated by a "~" will appear on a device. If a line is indented then it is a continuation of the previous line and the two combined represent the entire Top-Side Marking for that device.

Important Information and Disclaimer: The information provided on this page represents TI's knowledge and belief as of the date that it is provided. TI bases its knowledge and belief on information provided by third parties, and makes no representation or warranty as to the accuracy of such information. Efforts are underway to better integrate information from third parties. TI has taken and continues to take reasonable steps to provide representative and accurate information but may not have conducted destructive testing or chemical analysis on incoming materials and chemicals. TI and TI suppliers consider certain information to be proprietary, and thus CAS numbers and other limited information may not be available for release.

In no event shall TI's liability arising out of such information exceed the total purchase price of the TI part(s) at issue in this document sold by TI to Customer on an annual basis.

NAB0008A

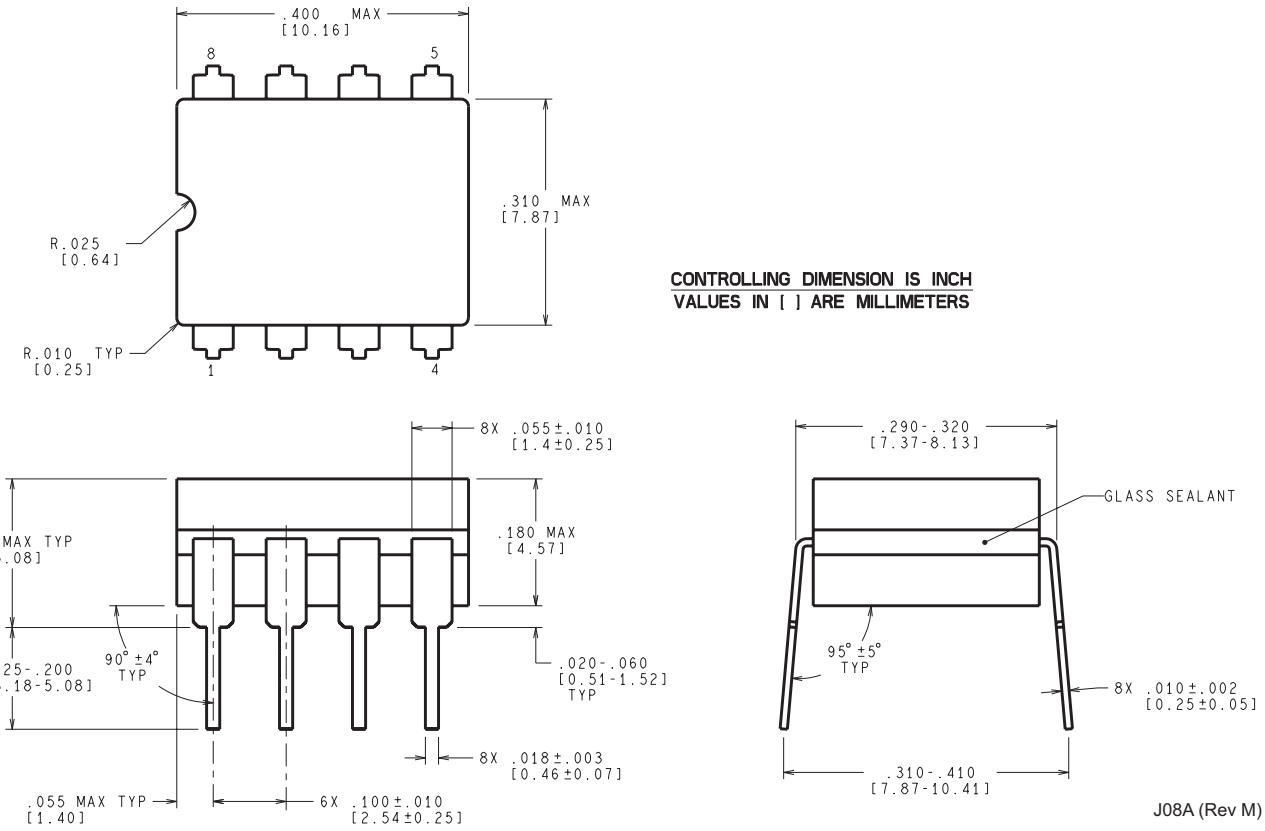
.400 MAX
[10.16]
8
5
.310 MAX
[7.87]
R.025
[0.64]
R.010 TYP
[0.25]
1
4
CONTROLLING DIMENSION IS INCH
VALUES IN [ ] ARE MILLIMETERS
8X .055±.010
[1.4±0.25]
.200 MAX TYP
[5.08]
.180 MAX
[4.57]
8X .125-.200
[3.18-5.08]
90° ±4°
TYP
.020-.060
[0.51-1.52]
TYP
8X .018±.003
[0.46±0.07]
.055 MAX TYP
[1.40]
6X .100±.010
[2.54±0.25]
.290-.320
[7.37-8.13]
GLASS SEALANT
95° ±5°
TYP
8X .010±.002
[0.25±0.05]
.310-.410
[7.87-10.41]
J08A (Rev M)

J (R–GDIP–T**)

14 LEADS SHOWN

CERAMIC DUAL IN–LINE PACKAGE

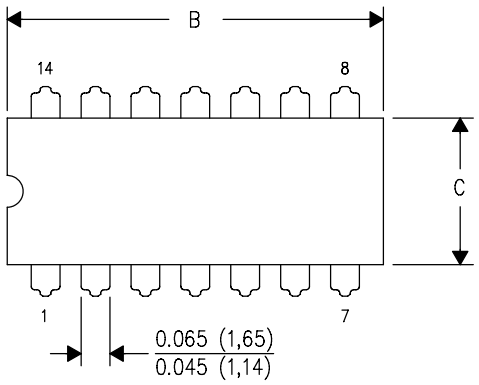

DIM \ PINS **	14	16	18	20
A	0.300 (7,62) BSC	0.300 (7,62) BSC	0.300 (7,62) BSC	0.300 (7,62) BSC
B MAX	0.785 (19,94)	.840 (21,34)	0.960 (24,38)	1.060 (26,92)
B MIN	—	—	—	—
C MAX	0.300 (7,62)	0.300 (7,62)	0.310 (7,87)	0.300 (7,62)
C MIN	0.245 (6,22)	0.245 (6,22)	0.220 (5,59)	0.245 (6,22)

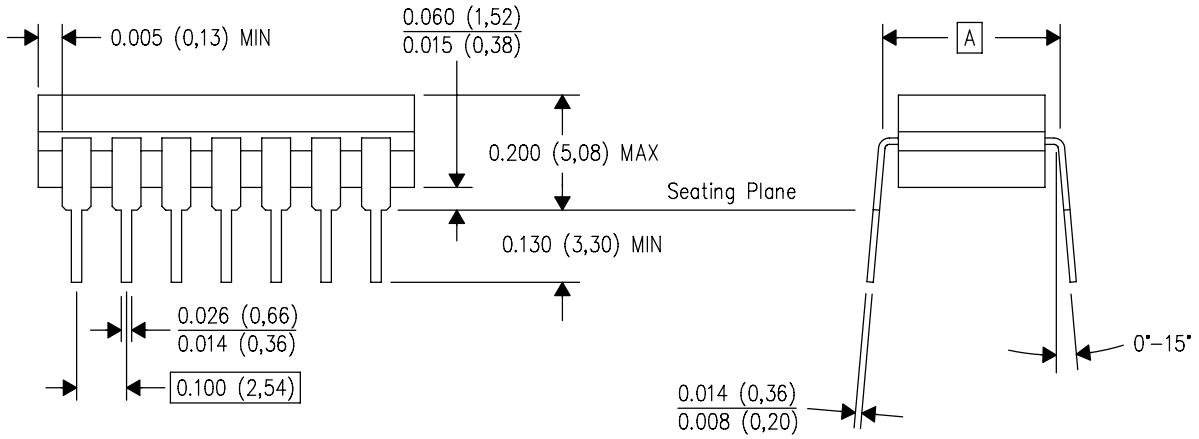

4040083/F 03/03

NOTES:
A. All linear dimensions are in inches (millimeters).
B. This drawing is subject to change without notice.
C. This package is hermetically sealed with a ceramic lid using glass frit.
D. Index point is provided on cap for terminal identification only on press ceramic glass frit seal only.
E. Falls within MIL STD 1835 GDIP1–T14, GDIP1–T16, GDIP1–T18 and GDIP1–T20.

LMC (O–MBCY–W8) METAL CYLINDRICAL PACKAGE

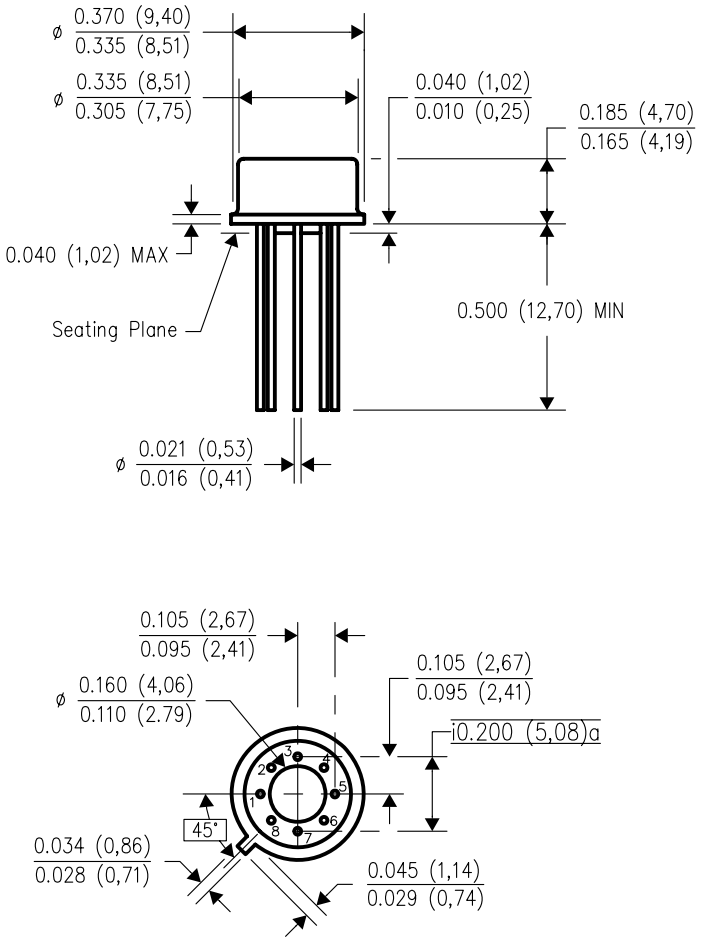

4202483/B 09/07

NOTES:
A. All linear dimensions are in inches (millimeters).
B. This drawing is subject to change without notice.
C. Leads in true position within 0.010 (0,25) R @ MMC at seating plane.
D. Pin numbers shown for reference only. Numbers may not be marked on package.
E. Falls within JEDEC MO–002/TO–99.

IMPORTANT NOTICE

Texas Instruments Incorporated and its subsidiaries (TI) reserve the right to make corrections, enhancements, improvements and other changes to its semiconductor products and services per JESD46, latest issue, and to discontinue any product or service per JESD48, latest issue. Buyers should obtain the latest relevant information before placing orders and should verify that such information is current and complete. All semiconductor products (also referred to herein as “components”) are sold subject to TI’s terms and conditions of sale supplied at the time of order acknowledgment.

TI warrants performance of its components to the specifications applicable at the time of sale, in accordance with the warranty in TI’s terms and conditions of sale of semiconductor products. Testing and other quality control techniques are used to the extent TI deems necessary to support this warranty. Except where mandated by applicable law, testing of all parameters of each component is not necessarily performed.

TI assumes no liability for applications assistance or the design of Buyers’ products. Buyers are responsible for their products and applications using TI components. To minimize the risks associated with Buyers’ products and applications, Buyers should provide adequate design and operating safeguards.

TI does not warrant or represent that any license, either express or implied, is granted under any patent right, copyright, mask work right, or other intellectual property right relating to any combination, machine, or process in which TI components or services are used. Information published by TI regarding third-party products or services does not constitute a license to use such products or services or a warranty or endorsement thereof. Use of such information may require a license from a third party under the patents or other intellectual property of the third party, or a license from TI under the patents or other intellectual property of TI.

Reproduction of significant portions of TI information in TI data books or data sheets is permissible only if reproduction is without alteration and is accompanied by all associated warranties, conditions, limitations, and notices. TI is not responsible or liable for such altered documentation. Information of third parties may be subject to additional restrictions.

Resale of TI components or services with statements different from or beyond the parameters stated by TI for that component or service voids all express and any implied warranties for the associated TI component or service and is an unfair and deceptive business practice. TI is not responsible or liable for any such statements.

Buyer acknowledges and agrees that it is solely responsible for compliance with all legal, regulatory and safety-related requirements concerning its products, and any use of TI components in its applications, notwithstanding any applications-related information or support that may be provided by TI. Buyer represents and agrees that it has all the necessary expertise to create and implement safeguards which anticipate dangerous consequences of failures, monitor failures and their consequences, lessen the likelihood of failures that might cause harm and take appropriate remedial actions. Buyer will fully indemnify TI and its representatives against any damages arising out of the use of any TI components in safety-critical applications.

In some cases, TI components may be promoted specifically to facilitate safety-related applications. With such components, TI’s goal is to help enable customers to design and create their own end-product solutions that meet applicable functional safety standards and requirements. Nonetheless, such components are subject to these terms.

No TI components are authorized for use in FDA Class III (or similar life-critical medical equipment) unless authorized officers of the parties have executed a special agreement specifically governing such use.

Only those TI components which TI has specifically designated as military grade or “enhanced plastic” are designed and intended for use in military/aerospace applications or environments. Buyer acknowledges and agrees that any military or aerospace use of TI components which have ***not*** been so designated is solely at the Buyer's risk, and that Buyer is solely responsible for compliance with all legal and regulatory requirements in connection with such use.

TI has specifically designated certain components as meeting ISO/TS16949 requirements, mainly for automotive use. In any case of use of non-designated products, TI will not be responsible for any failure to meet ISO/TS16949.

Products		**Applications**	
Audio	www.ti.com/audio	Automotive and Transportation	www.ti.com/automotive
Amplifiers	amplifier.ti.com	Communications and Telecom	www.ti.com/communications
Data Converters	dataconverter.ti.com	Computers and Peripherals	www.ti.com/computers
DLP® Products	www.dlp.com	Consumer Electronics	www.ti.com/consumer-apps
DSP	dsp.ti.com	Energy and Lighting	www.ti.com/energy
Clocks and Timers	www.ti.com/clocks	Industrial	www.ti.com/industrial
Interface	interface.ti.com	Medical	www.ti.com/medical
Logic	logic.ti.com	Security	www.ti.com/security
Power Mgmt	power.ti.com	Space, Avionics and Defense	www.ti.com/space-avionics-defense
Microcontrollers	microcontroller.ti.com	Video and Imaging	www.ti.com/video
RFID	www.ti-rfid.com		
OMAP Applications Processors	www.ti.com/omap	**TI E2E Community**	e2e.ti.com
Wireless Connectivity	www.ti.com/wirelessconnectivity		

Mailing Address: Texas Instruments, Post Office Box 655303, Dallas, Texas 75265
Copyright © 2013, Texas Instruments Incorporated