RoHS COMPLIANT

Pulse Electronics
www.pulseelectronics.com

NOTES:

1. CONNECTOR MATERIAL:
   HOUISING:THERMOPLASTIC UL94 V-0
   SHIELD:Brass
   SHIELD PLATING:NICKEL
   CONTACT:COOPER ALLOY
   CONTACT PLATING: SELECTIVE GOLD, 6 MICRO-INCHS MIN IN CONTACT AREA
2. PIN NOT ELECTRICALLY CONNECTED MAYBE OMITTED SEE ELECTRICAL DRAWING FOR OMITTED PINS
3. RJ45 CAVITIES CONFORM TO FCC RULES AND REGULATION PART 68.
4. THE PART IS RECOMMENDDED FOR WAVE SOLDERING PROCESS PEAK SOLDERING TEMPERATURE IS 260°C MAX, 10 SECS MAX
5. OPERATING TEMPERATURE T=0°C TO +70°C.
6. STORAGE TEMPERATURE T=-40°C TO +85°C.
7. All CRITICAL DIMENSIONS WITH "*"
8. PACKAGING INFORMATION: 50 PCS/TRAY, 1200 PCS/BOX.

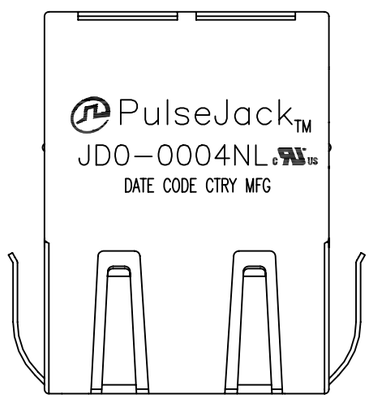

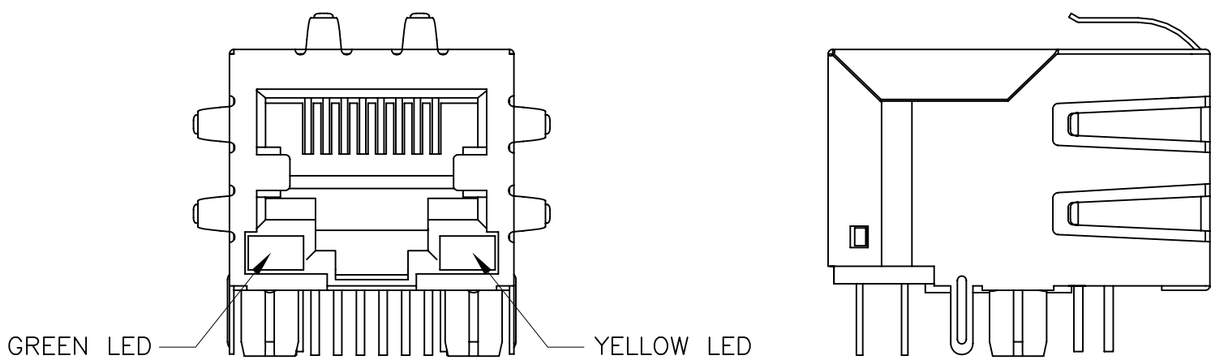

FINAL OUTLINE

@ Copyright, 2015. Pulse Electronics Corp. All rights reserved. Pulse confidential & proprietary. (01/26/15)

PRODUCT DESCRIPTION	TLA DRAWING	PS DRAWING	SHEET	PART NO.	DATASHEET REV.
CONN,RJ45,1X1,100D,1:1,TU	JD0-0004NL-X1	-	1 OF 5	JD0-0004NL	A

E-MAIL: PRODINFONETWORK@PULSEELECTRONICS.COM(US), ASIA@PULSEELECTRONICS.COM(Asia) PHONE: USA:858 674 8100, GERMANY:49 7032 78060, SINGAPORE:65 6287 8998, SHANGHAI:86 21 62787060, TAIWAN:886 3 4356768

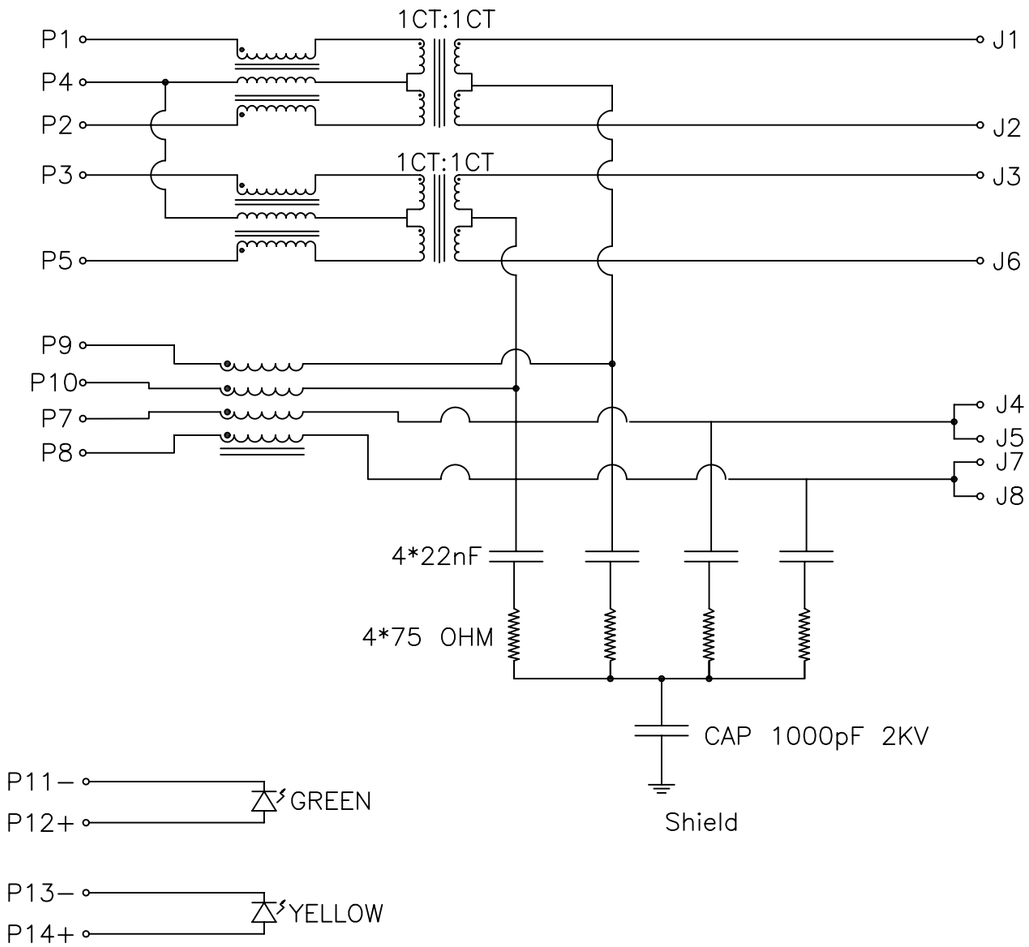

SCHEMATIC

Electronical Specifications:

1.0 Turn Ratio @100KHz: (P1~P2):(J1~J2) = 1:1±5%
(P3~P5):(J3~J6) = 1:1±5%

2.0 Primary Inductance: 350uH MIN @100KHZ,0.1V 8mA DC BIAS

3.0 DC Resistance:(J1~J2):(J3~J6) 1.2 OHMS MAX

4.0 Insertion Loss: 1−100MHz −1.2dB MAX

5.0 Return Loss: 1−30MHz −16dB MIN
30−60MHz −12dB MIN
60−80MHz −10dB MIN

6.0 CROSS TALK: 1−100MHz −30dB MIN

7.0 COMMON TO COMMON MODE ATTENUATION: 1−100MHz −30dB MIN

8.0 Isolation: PHY Side to Line Side: 1500VAC or 2250VDC

9.0 DC CURRENT/VOLTAGE RATING−PSE PINS: 350mA @57V(CONTINUOUS)

LED SPECIFICATION:

STANDARD LED	WAVELENGTH	Forward V(max)	TYP
GREEN	565nm	2.4V	2.2V
YELLOW	590nm	2.5V	2.1V

*WITH A FORWARD CURRENT OF 20mA

@ Copyright, 2015. Pulse Electronics Corp. All rights reserved. Pulse confidential & proprietary. (01/26/15)

E−MAIL: PRODINFONETWORK@PULSEELECTRONICS.COM(US), ASIA@PULSEELECTRONICS.COM(Asia) PHONE: USA:858 674 8100, GERMANY:49 7032 78060, SINGAPORE:65 6287 8998, SHANGHAI:86 21 62787060, TAIWAN:886 3 4356768

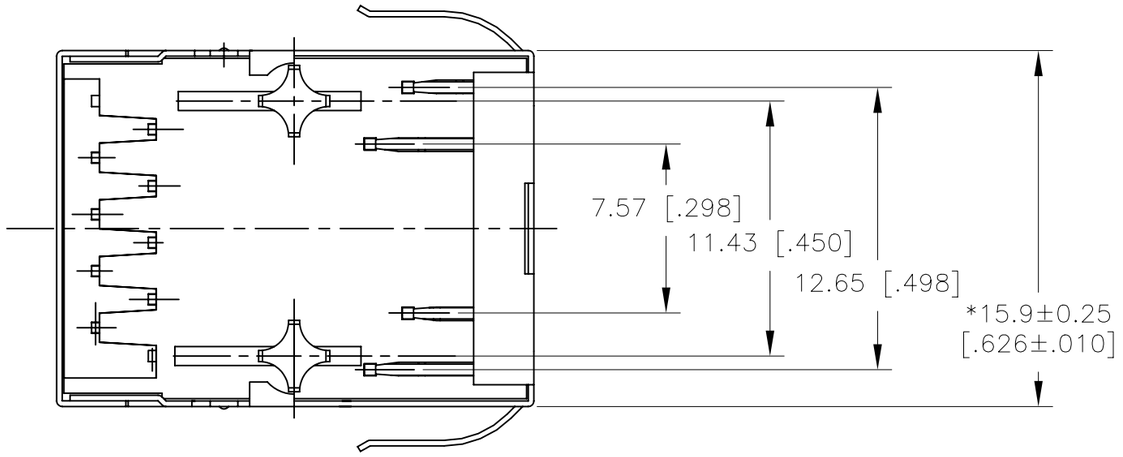

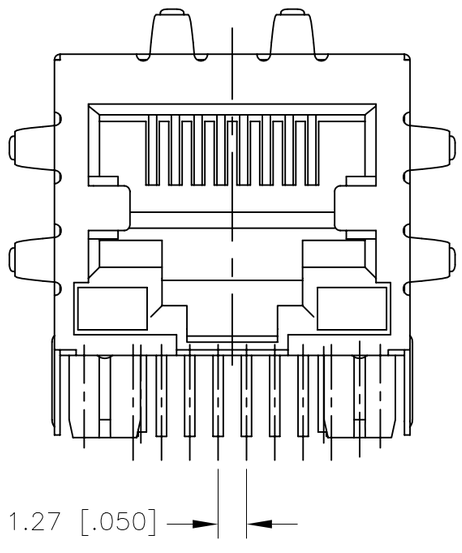

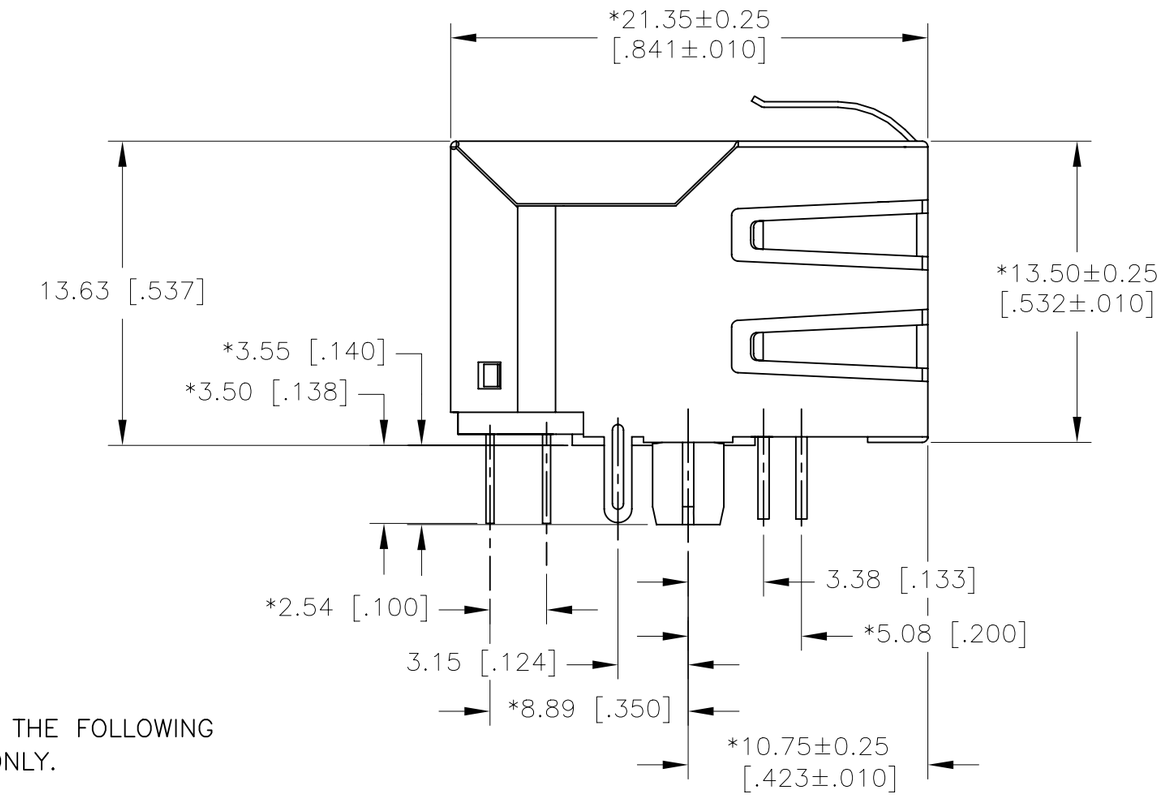

DIMENSIONS ARE IN MILLIMETERS [INCHES] WITH THE FOLLOWING TOLERANCES: [INCHES] ARE FOR REFERENCE ONLY.
X.XX= ±0.25 [±.010]

@ Copyright, 2015. Pulse Electronics Corp. All rights reserved. Pulse confidential & proprietary. (01/26/15)

PRODUCT DESCRIPTION	TLA DRAWING	PS DRAWING	SHEET	PART NO.	DATASHEET REV.
CONN,RJ45,1X1,100D,1:1,TU	JD0-0004NL-X1	–	3 OF 5	JD0-0004NL	A

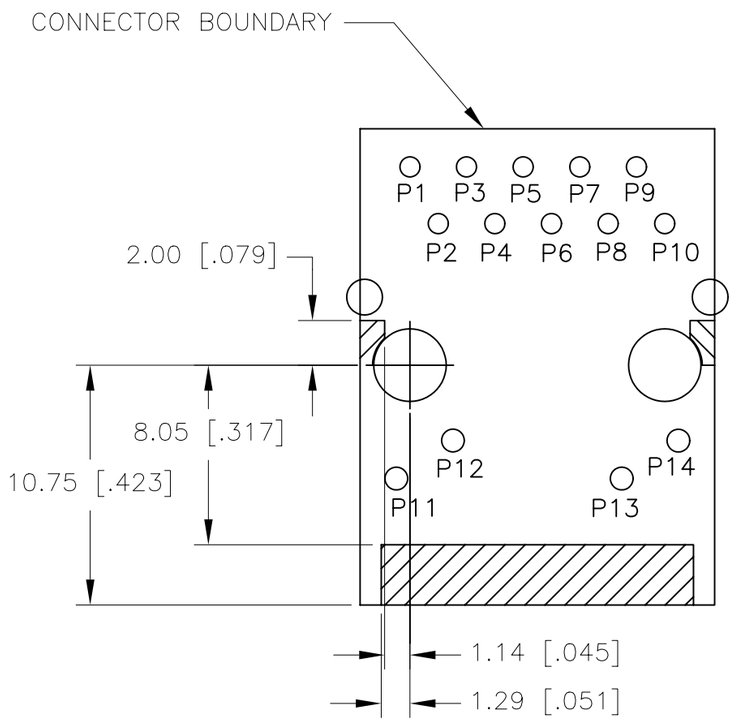

KEEP–OUT AREA (COMPONENT SIDE SHOWN)

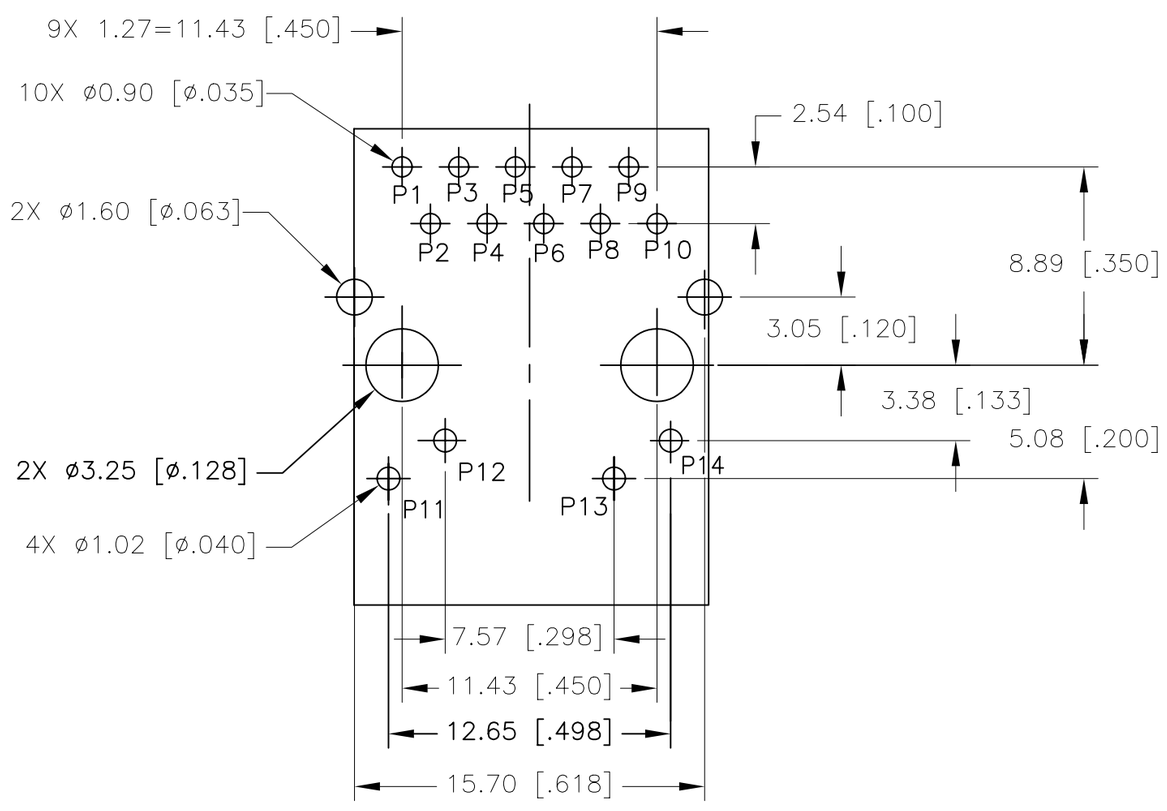

RECOMMENDED PWB LAYOUT
(COMPONENT SIDE SHOWN)

DIMENSIONS ARE IN MILLIMETERS [INCHES] WITH THE FOLLOWING TOLERANCES: [INCHES] ARE FOR REFERENCE ONLY.
X.XX= ±0.10 [±.004]

@ Copyright, 2015. Pulse Electronics Corp. All rights reserved. Pulse confidential & proprietary. (01/26/15)

PRODUCT DESCRIPTION	TLA DRAWING	PS DRAWING	SHEET	PART NO.	DATASHEET REV.
CONN,RJ45,1X1,100D,1:1,TU	JD0–0004NL–X1	–	4 OF 5	JD0–0004NL	A

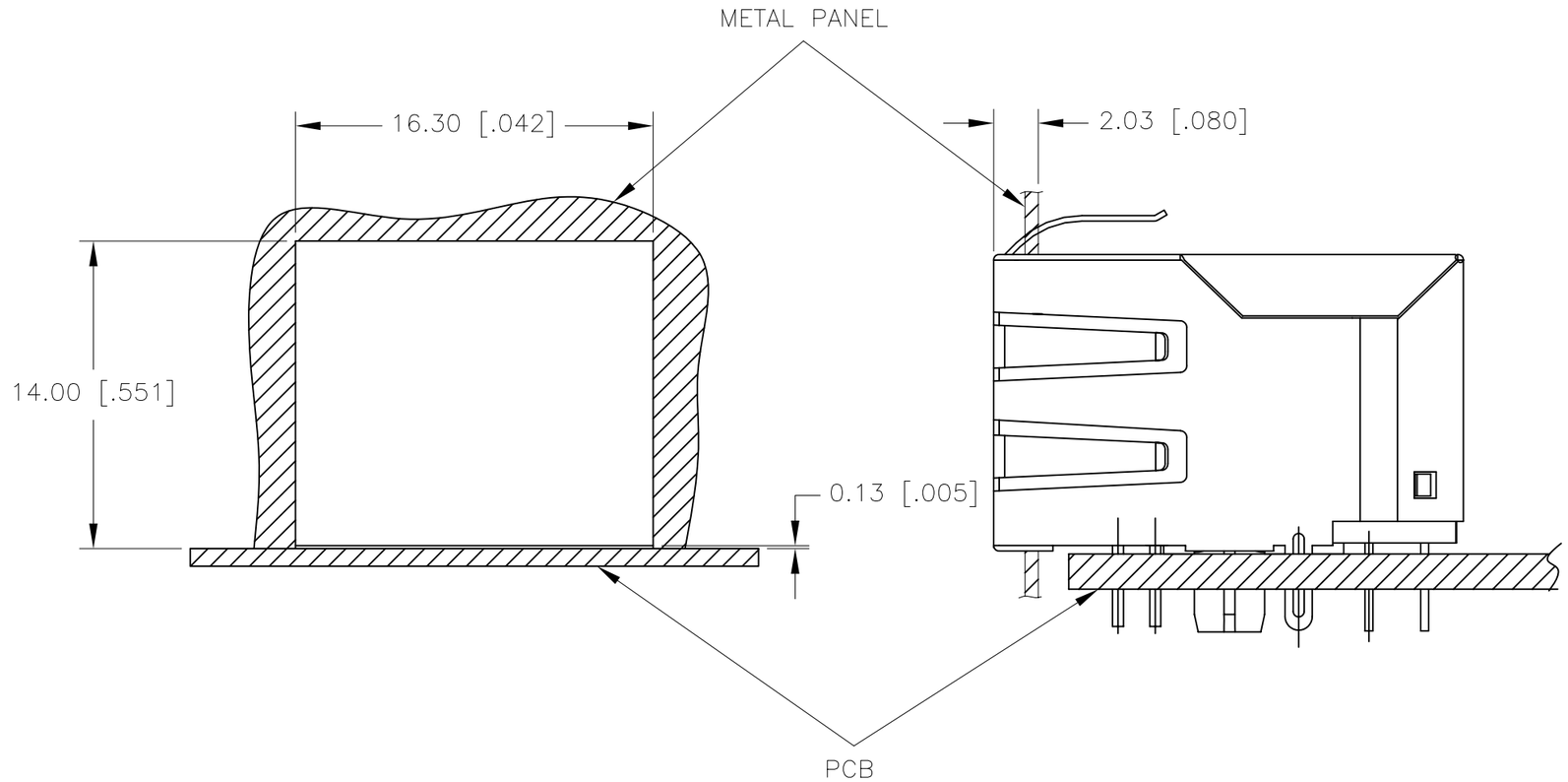

SUGGESTED PANEL CUTOUT

DIMENSIONS ARE IN MILLIMETERS [INCHES] WITH THE FOLLOWING
TOLERANCES: [INCHES] ARE FOR REFERENCE ONLY.
X.XX= ±0.10 [±.004]

@ Copyright, 2015. Pulse Electronics Corp. All rights reserved. Pulse confidential & proprietary. (01/26/15)

PRODUCT DESCRIPTION	TLA DRAWING	PS DRAWING	SHEET	PART NO.	DATASHEET REV.
CONN,RJ45,1X1,100D,1:1,TU	JD0-0004NL-X1	-	5 OF 5	JD0-0004NL	A