

JFA CONNECTOR J5000 SERIES

11.0mm pitch/Disconnectable Crimp style Wire-to-wire connectors

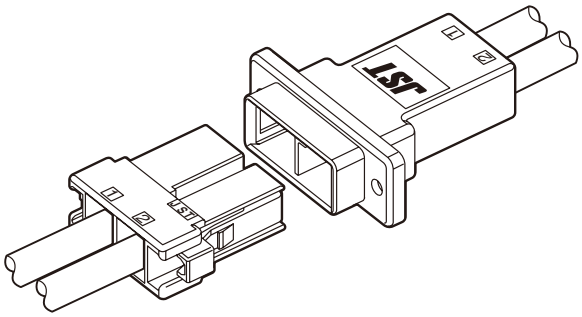

One touch mating and unmating connector corresponding to high current. Modular type is also available.

- ***High current capacity***
- ***Easy mating connector***

Specifications

- Current rating: Refer to the following matrix table.
- Voltage rating: 600V AC, DC
- Temperature range: -55°C to +105°C
  (including temperature rise in applying electrical current)
- Withstanding voltage: 3.0kV AC/minute
- Applicable wire: AWG #16 to #8 (1.25 to 8.0mm^2)

*Contact JST for details.
*Compliant with RoHS.

Current rating Unit: A

Circuits	Wire size (AWG)				
	#8	#10	#12	#14	#16
1	50	37	30	24	20
2	45	34	28	22	18
3	43	34	27	21	17
4	42	32	26	20	16
6	40	32	26	20	16

Standards

Recognized E60389

Receptacle contact

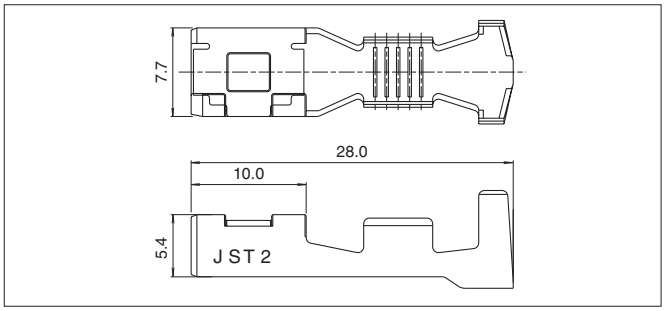

Model No.		Applicable wire			Insulation O.D. (mm)	Q'ty	
Strip contact	Loose piece	Nominal	mm²	AWG#		reel	Box(Loose piece)
SJ5F-71GF-M6.5	BJ5F-71GF-M6.5	S	1.25～2.0	16～14	3.1～4.0	800	200
SJ5F-81GF-M6.5	LJ5F-81GF-M6.5	M	3.5 ～5.5	12～10	4.0～5.3	600	150
SJ5F-91GF-M6.5	LJ5F-91GF-M6.5	L	8.0	8	7.2～8.2	450	100

Material and Finish
Copper alloy (superior conductivity), nickel-undercoated, selective gold-plated

RoHS compliance

Tab contact

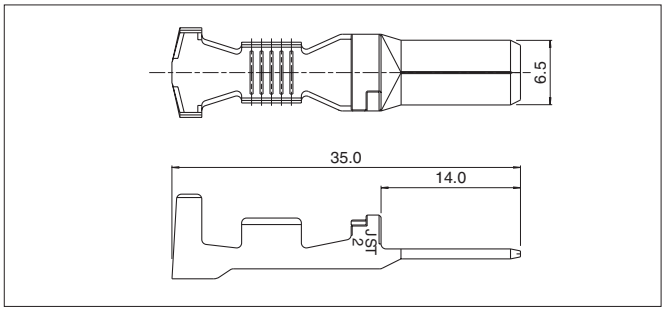

Model No.		Applicable wire			Insulation O.D. (mm)	Q'ty	
Strip contact	Loose piece	Nominal	mm²	AWG#		reel	Box(Loose piece)
SJ5M-71GF-M6.5	BJ5M-71GF-M6.5	S	1.25～2.0	16～14	3.1～4.0	800	200
SJ5M-81GF-M6.5	LJ5M-81GF-M6.5	M	3.5 ～5.5	12～10	4.0～5.3	600	150
SJ5M-91GF-M6.5	LJ5M-91GF-M6.5	L	8.0	8	7.2～8.2	450	100

Material and Finish
Copper alloy (superior conductivity), nickel-undercoated, selective gold-plated

RoHS compliance

Crimping machine, Applicator

Strip contact Model No.	Crimping machine	Crimp applicator	Dies	Crimp applicator with dies
SJ5F-71GF-M6.5	AP-K2N	MKS-L-J5	MK/SJ5F/M-71-65	APLMK SJ5F/M71-65
SJ5M-71GF-M6.5				
SJ5F-81GF-M6.5			MK/SJ5F/M-81-65	APLMK SJ5F/M81-65
SJ5M-81GF-M6.5				
SJ5F-91GF-M6.5	AP-K6A	MKS-L-J5L	MK/SJ5F/M-91-65	APLMK SJ5F/M91-65
SJ5M-91GF-M6.5				

Loose piece	Hand crimp tools
BJ5F-71GF-M6.5	YRF-888
BJ5M-71GF-M6.5	
LJ5F-81GF-M6.5	YRF-889
LJ5M-81GF-M6.5	
LJ5F-91GF-M6.5	Battery operated type * BCT-860JFA
LJ5M-91GF-M6.5	

• Extraction tool for J5000 series: EJ-JFAJ5
**Contact JST for details.*

List of combinations

The combination of the J5200 series.

Receptacle housing	
Single-row 2, 3 circuits (J5200S) 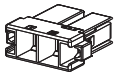	X type J5FS-■■V-KX
	Y type J5FS-■■V-KY
Double-row 4, 6 circuits (J5200M) 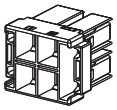	XX type J5FM-■■V-KXX
	YY type J5FM-■■V-KYY
	XY type J5FM-■■V-KXY

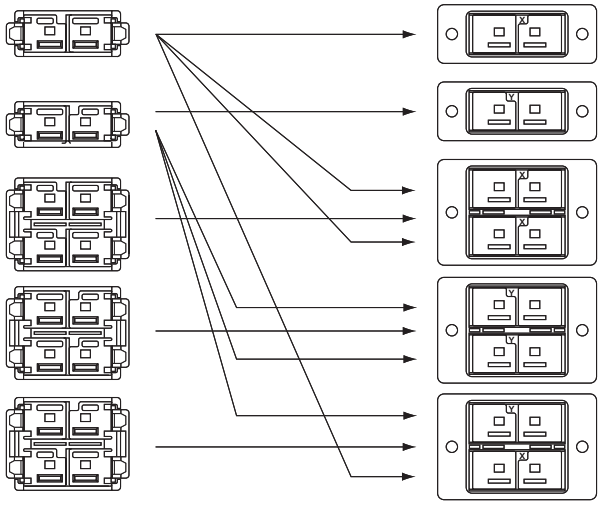

Tab housing	
Single-row 2, 3 circuits (J5200S) 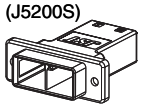 Panel mounting type	X type J5MSP-■■V-KX
	Y type J5MSP-■■V-KY
Double-row 4, 6 circuits (J5200M) 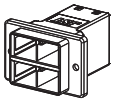 Panel mounting type	XX type J5MMP-■■V-KXX
	YY type J5MMP-■■V-KYY
	XY type J5MMP-■■V-KXY

Note: Number of circuits is indicated in ■■.

Receptacle housing

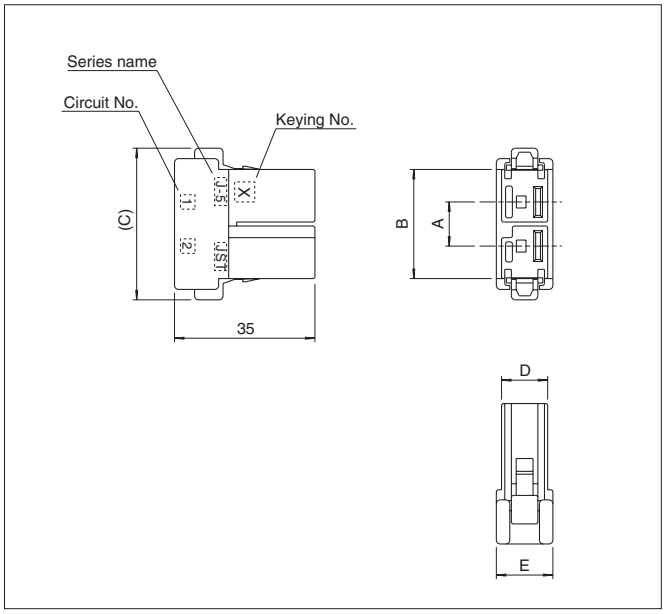

Circuits	Keying	Model No.	Dimensions (mm)					Q'ty / box
			A	B	C	D	E	
2	X	**J5FS-02V-KX**	11.0	27.2	37.8	11.5	14.1	50(bag)
	Y	**J5FS-02V-KY**	11.0	27.2	37.8	11.5	14.1	50(bag)
3	X	**J5FS-03V-KX**	22.0	38.2	48.8	11.5	14.1	50(bag)
	Y	**J5FS-03V-KY**	22.0	38.2	48.8	11.5	14.1	50(bag)
4	XX	**J5FM-04V-KXX**	11.0	27.2	37.8	26.0	28.6	180
	YY	**J5FM-04V-KYY**	11.0	27.2	37.8	26.0	28.6	180
	XY	**J5FM-04V-KXY**	11.0	27.2	37.8	26.0	28.6	180
6	XX	**J5FM-06V-KXX**	22.0	38.2	48.8	26.0	28.6	126
	YY	**J5FM-06V-KYY**	22.0	38.2	48.8	26.0	28.6	126
	XY	**J5FM-06V-KXY**	22.0	38.2	48.8	26.0	28.6	126
10	XX	**J5FM-10V-KXX**	44.0	60.2	70.8	26.0	28.6	—
	YY	**J5FM-10V-KYY**	44.0	60.2	70.8	26.0	28.6	—
	XY	**J5FM-10V-KXY**	44.0	60.2	70.8	26.0	28.6	—

Material
Glass-filled PBT, UL94V-0, black

RoHS compliance

Tab housing (Panel mounting type)

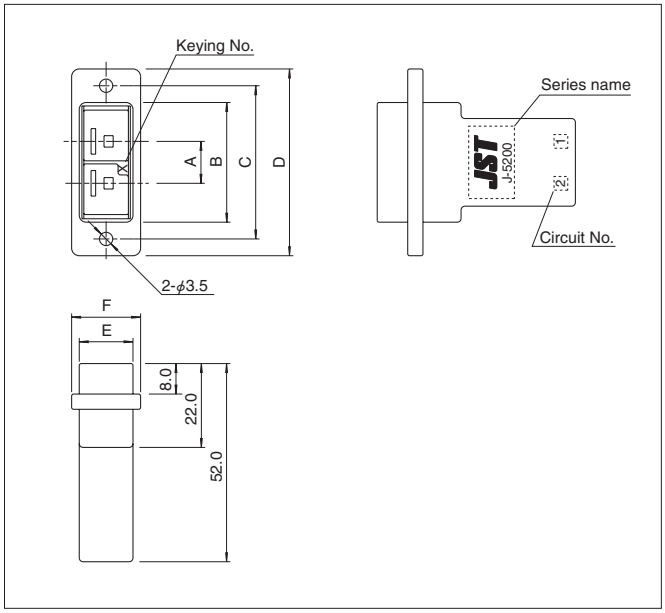

Circuits	Keying	Model No.	Dimensions (mm)						Q'ty / box
			A	B	C	D	E	F	
2	X	**J5MSP-02V-KX**	11.0	31.4	40.2	49.0	14.1	18.1	40(bag)
	Y	**J5MSP-02V-KY**	11.0	31.4	40.2	49.0	14.1	18.1	40(bag)
3	X	**J5MSP-03V-KX**	22.0	42.4	51.2	60.0	14.1	18.1	40(bag)
	Y	**J5MSP-03V-KY**	22.0	42.4	51.2	60.0	14.1	18.1	40(bag)
4	XX	**J5MMP-04V-KXX**	11.0	31.4	40.2	49.0	28.6	32.6	72
	YY	**J5MMP-04V-KYY**	11.0	31.4	40.2	49.0	28.6	32.6	72
	XY	**J5MMP-04V-KXY**	11.0	31.4	40.2	49.0	28.6	32.6	72
6	XX	**J5MMP-06V-KXX**	22.0	42.4	51.2	60.0	28.6	32.6	63
	YY	**J5MMP-06V-KYY**	22.0	42.4	51.2	60.0	28.6	32.6	63
	XY	**J5MMP-06V-KXY**	22.0	42.4	51.2	60.0	28.6	32.6	63
10	XX	**J5MMP-10V-KXX**	44.0	64.4	73.2	82.0	28.6	32.6	—
	YY	**J5MMP-10V-KYY**	44.0	64.4	73.2	82.0	28.6	32.6	—
	XY	**J5MMP-10V-KXY**	44.0	64.4	73.2	82.0	28.6	32.6	—

Material
Glass-filled PBT, UL94V-0, black

RoHS compliance

Keying plug

Model No.: J5KP-VY

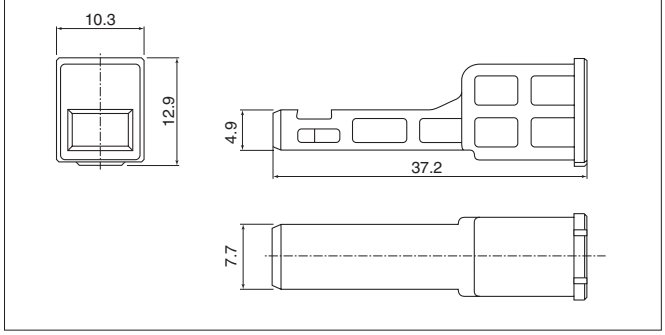

RoHS compliance

Panel layout

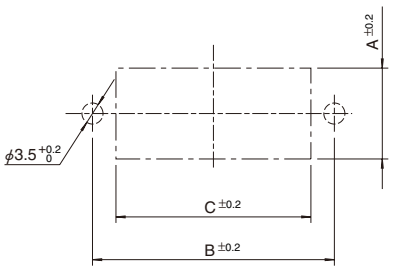

Circuits	Dimensions (mm)		
	A	B	C
2	15.1	40.2	32.4
3	15.1	51.2	43.4
4	29.6	40.2	32.4
6	29.6	51.2	43.4
10	29.6	65.4	73.2

Model number identification

Receptacle contact

S J5 F – 71 GF – M 6.5

- Form: S...Strip form, B...Loose piece
  L...Loose piece with curled barrels
- Series name
- Kind of terminal: F...Receptacle contact
- Applicable wire: 71...AWG #16 ~ #14, 81...AWG #12 ~ #10,
  91...AWG #8
- Surface finish: GF...Nickel-undercoated, selective gold-plated
- Meterial: M...Copper alloy
- Terminal size

Tab contact

S J5 M – 71 GF – M 6.5

- Form: S...Strip form, B...Loose piece
  L...Loose piece with curled barrels
- Series name
- Kind of terminal: M...Tab contact
- Applicable wire: 71...AWG #16 ~ #14, 81...AWG #12 ~ #10,
  91...AWG #8
- Surface finish: GF...Nickel-undercoated, selective gold-plated
- Meterial: M...Copper alloy
- Terminal size

Receptacle housing

J5 F S – 02 V – K X

- Series name
- Type of connector: F...Receptacle housing
- Rows: S....Single-row, M...Double-row modular type
- No. of circuits: 2, 3, 4, 6
- Flammability: UL94V-O
- Color indication: K...Black
- Keying: X...X-Keying, Y...Y-Keying, XX...XX-Keying
  YY...YY-Keying, XY...XY-Keying

Tab housing

J5 M S P – 02 V – K X

- Series name
- Kind of terminal: M...Tab housing
- Rows: S....Single-row, M...Double-row modular type
- Configuration: P...Panel type
- No. of circuits: 2, 3, 4, 6
- Flammability: UL94V-O
- Color indication: K...Black
- Keying: X...X-Keying, Y...Y-Keying, XX...XX-Keying
  YY...YY-Keying, XY...XY-Keying