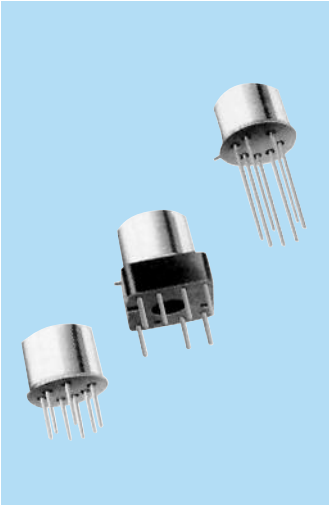

TELEDYNE RELAYS

A Teledyne Technologies Company

MAGNETIC-LATCHING ESTABLISHED RELIABILITY TO-5 RELAYS

SPDT

SERIES 421

SERIES DESIGNATION	RELAY TYPE
421	SPDT basic relay
421D	SPDT relay with internal diode for coil transient suppression
421DD	SPDT relay with internal diodes for coil transient suppression and polarity reversal protection

DESCRIPTION

The magnetic-latching TO-5 relay, originally conceived and developed by Teledyne, has become one of the industry standards for low-level switching from dry circuit to 0.5 ampere. Designed for high-density PC board mounting, its small size and low coil power dissipation make the 421 relay one of the most versatile ultraminiature relays available.

The following unique construction features and manufacturing techniques provide excellent resistance to environmental extremes and overall high reliability:

- All welded construction.
- Unique uni-frame design providing high magnetic efficiency and mechanical rigidity.
- High force/mass ratios for resistance to shock and vibration.
- Advanced cleaning techniques provide maximum assurance of internal cleanliness.
- Precious metal alloy contacts material with gold plating assures excellent high current and dry circuit switching capabilities.

The Series 421D and 421DD utilize discrete silicon diodes for coil suppression and polarity reversal protection.

By virtue of its inherently low intercontact capacitance and contact circuit losses, the 421 relay has proven to be an excellent ultraminiature RF switch for frequency ranges well into the UHF spectrum. A typical RF application for this TO-5 relay is in handheld radio transceivers, wherein the combined features of good RF performance, small size, low coil power dissipation and high reliability make it a preferred method of transmit-receive switching (see Figure 1).

The Series 421 magnetic-latching relays are ideally suited for applications where coil power dissipation must be minimized. The relays can be operated with a short duration pulse. After the contacts have transferred, no external holding power is required.

The magnetic latching feature of the Series 421 provides a “memory” capability, since the relays will not reset upon removal of coil power.

PRINCIPLE OF OPERATION

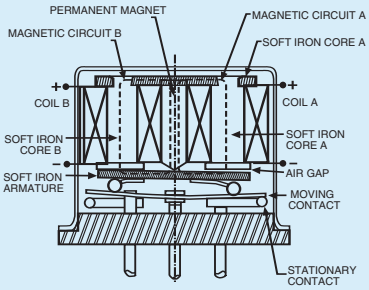

Energizing Coil B produces a magnetic field opposing the holding flux of the permanent magnet in Circuit B. As this net holding force decreases, the attractive force in the air gap of Circuit A, which also results from the flux of the permanent magnet, becomes great enough to break the armature free of Core B, and snap it into a closed position against Core A. The armature then remains in this position upon removal of power from Coil B, but will snap back into position B upon energizing Coil A. Since operation depends upon cancellation of a magnetic field, it is necessary to apply the correct polarity to the relay coils as indicated on the relay schematic. When latching relays are installed in equipment, the latch and reset coils should not be pulsed simultaneously. Coils should not be pulsed with less than rated coil voltage and the pulse width should be a minimum of three times the specified operate time of the relay. If these conditions are not followed, it is possible for the relay to be in the magnetic neutral position.

ENVIRONMENTAL AND PHYSICAL SPECIFICATIONS	
Temperature (Ambient)	–65°C to +125°C
Vibration (General Note 1)	30 g’s to 3000 Hz
Shock (General Note 1)	100 g’s, 6 msec, half-sine
Acceleration	50 g’s
Enclosure	Hermetically sealed
Weight	0.089 oz. (2.52g) max.

SPECIFICATIONS ARE SUBJECT TO CHANGE WITHOUT NOTICE
www.teledynerelays.com

©2005 TELEDYNE RELAYS
421/1205/Q1

SERIES 421
GENERAL ELECTRICAL SPECIFICATIONS (–65°C to +125°C unless otherwise noted) (Notes 2 & 3)

Contact Arrangement	1 Form C (SPDT)	
Rated Duty	Continuous	
Contact Resistance	0.125 ohm max. before life; 0.225 ohm max. after life at 0.5A/28Vdc (measured 1/8" from header)	
Contact Load Ratings (DC) (See Fig. 2 for other DC resistive voltage/current ratings)	Resistive: 0.5 Amp/28Vdc Inductive: 200 mA/28Vdc (320 mH) Lamp: 100 mA/28Vdc Low Level: 10 to 50 µA/10 to 50mV	
Contact Load Ratings (AC)	Resistive: 250 mA/115Vac, 60 and 400 Hz (Case not grounded) 100 mA/115Vac, 60 and 400 Hz (Case grounded)	
Contact Life Ratings	10,000,000 cycles (typical) at low level 100,000 cycles min. at all other loads specified above	
Contact Overload Rating	1A/28Vdc Resistive (100 cycles min.)	
Contact Carry Rating	Contact factory	
Coil Operating Power	290 milliwatts typical at nominal rated voltage @ 25°C	
Operate Time	1.5 msec max. at nominal rated coil voltage	
Contact Bounce	1.5 msec max.	
Minimum Operate Pulse	4.5 msec width @ rated voltage	
Intercontact Capacitance	0.4 pf typical	
Insulation Resistance	10,000 megohms min. between mutually isolated terminals	
Dielectric Strength	Atmospheric pressure: 500 Vrms/60Hz	70,000 ft.: 125 Vrms/60Hz
Negative Coil Transient (Vdc)	421D/421DD	1.0 max
Diode P.I.V. (Vdc)	421D/421DD	100 min.

DETAILED ELECTRICAL SPECIFICATIONS (–65°C to +125°C unless otherwise noted) (Note 3)

BASE PART NUMBERS (See Note 8 for full P/N example)		**421-5 421D-5 421DD-5**	**421-6 421D-6 421DD-6**	**421-9 421D-9 421DD-9**	**421-12 421D-12 421DD-12**	**421-18 421D-18 421DD-18**	**421-26 421D-26 421DD-26**
Coil Voltage (Vdc)	Nom.	5.0	6.0	9.0	12.0	18.0	26.5
	Max.	6.0	8.0	12.0	16.0	24.0	32.0
Coil Resistance (Ohms ±10% @25°C)	421/421D	61	120	280	500	1130	2000
	421DD (Note 4)	48	97	280	500	1130	2000
Coil Current (mAdc @25°C) (421DD Series only)	Min.	78.0	45.8	25.7	19.6	13.4	11.2
	Max.	111.8	63.0	34.9	26.7	18.8	15.2
Set & Reset Voltage (Vdc, Max.)	421	3.5	4.5	6.8	9.0	13.5	18.0
	421D	3.7	4.5	6.8	9.0	13.5	18.0
	421DD	4.5	5.5	7.8	10.0	14.5	19.0

PERFORMANCE CURVES (NOTE 2)

TYPICAL RF PERFORMANCE

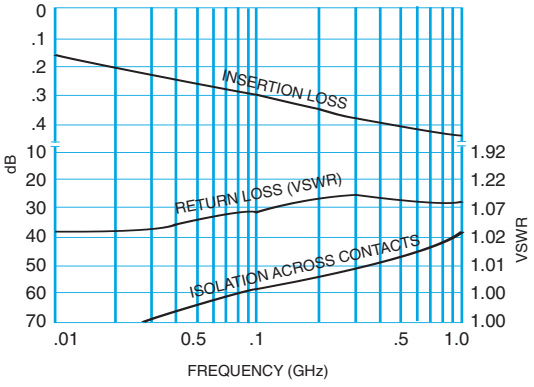

FIGURE 1

TYPICAL DC CONTACT RATING (RESISTIVE)

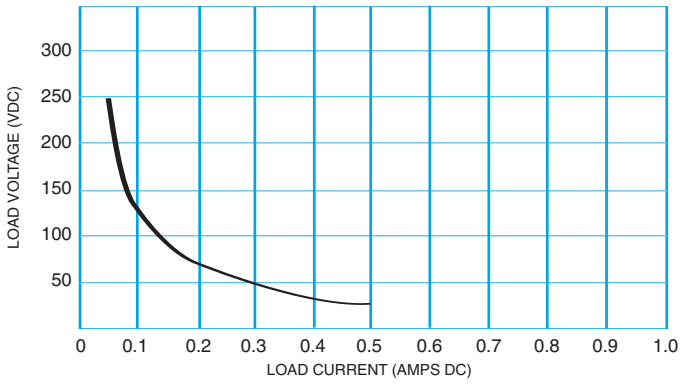

FIGURE 2

OUTLINE DIMENSIONS

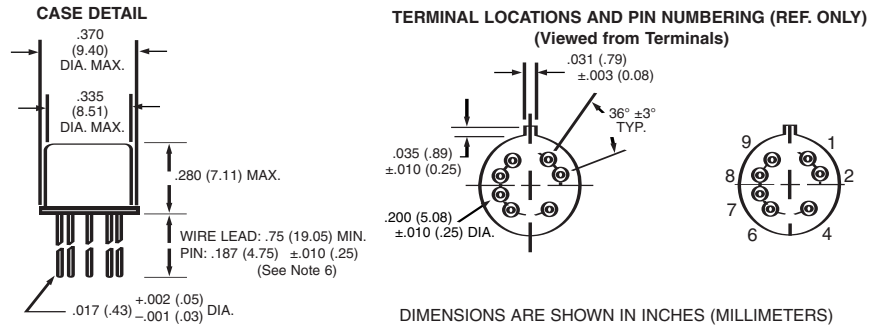

DIMENSIONS ARE SHOWN IN INCHES (MILLIMETERS)

SCHEMATIC DIAGRAMS

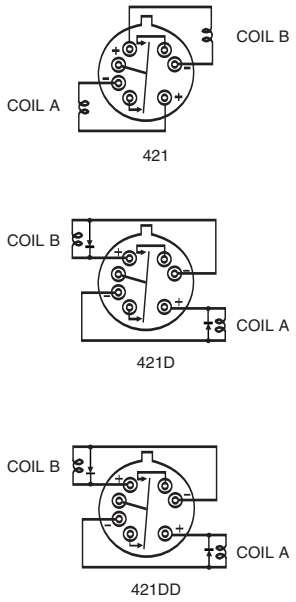

SCHEMATICS ARE VIEWED FROM TERMINALS
COIL A LAST ENERGIZED

GENERAL NOTES

1. Relay contacts will exhibit no chatter in excess of 10 µsec or transfer in excess of 1 µsec.
2. "Typical" characteristics are based on available data and are best estimates. No on-going verification tests are performed.
3. Unless otherwise specified, parameters are initial values.
4. For reference only. Coil resistance not directly measurable at relay terminals due to internal series diode, 421DD only.
5. Unless otherwise specified, relays will be supplied with either gold-plated or solder-coated leads.
6. The slash and characters appearing after the slash are not marked on the relay.
7. Screened HI-REL versions available. Contact factory.
8.

Teledyne Part Numbering System for $T^2R^{®}$ Established Reliability Relay

ER 421 X M3 - 26 A / S Q

- ER — Established Reliability Designator
- 421 — Relay Series
- X — Optional Ground Pin (See Appendix)
- M3 — Pad Option (See Appendix)
- 26 — Coil Voltage
- A — Screening and Reliability Level
- S — S= 0.187" leads (Note 6)
- Q — Q= Solder Coated Leads G= Gold Plated Leads (Notes 5 and 6)

Teledyne Part Numbering System for Military Qualified (JAN) Relays

J 421 X M - 26 P L

- J — Military (JAN) Designator
- 421 — Relay Series
- X — Optional Ground Pin (See Appendix)
- M — Pad Option (See Appendix)
- 26 — Coil Voltage
- P — Terminal Variant P = 0.187"
- L — Screening and Reliability Level

JAN part number example is for reference only. Actual part number may not exist.

SPECIFICATIONS ARE SUBJECT TO CHANGE WITHOUT NOTICE
www.teledynerelays.com
©2005 TELEDYNE RELAYS
421/1205/Q1

Appendix A: Spacer Pads

Pad designation and bottom view dimensions	Height	For use with the following:	Dim. H Max.
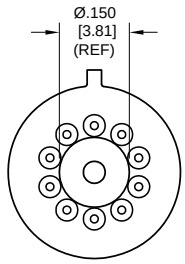 "M4" Pad for TO-5	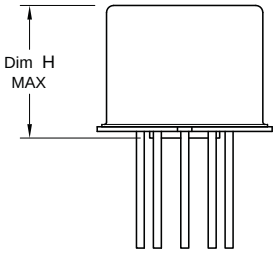	ER411T ER412, ER412D, ER412DD	.295 (7.49)
		712, 712D, 712TN, RF300, RF310, RF320	.300 (7.62)
		ER420, ER422D, ER420DD, 421, ER421D, ER421DD, ER422, ER422D, ER422DD, 722, 722D, RF341	.305 (7.75)
		ER431T, ER432T, ER432, ER432D, ER432DD	.400 (10.16)
		732, 732D, 732TN, RF303, RF313, RF323	.410 (10.41)
		RF312	.350 (8.89)
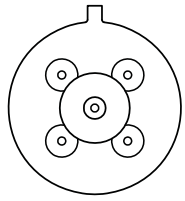 "M4" Pad for TO-5	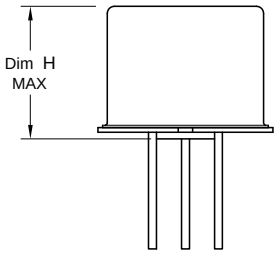	ER411, ER411D, ER411DD	.295 (7.49)
		ER431, ER431D, ER431DD	.400 (10.16)
		RF311	.300 (7.62)
		RF331	.410 (10.41)
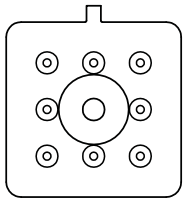 "M4" Pad for Centigrid®	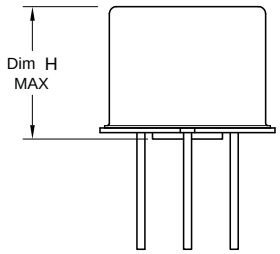	172, 172D	.305 (7.75)
		ER114, ER114D, ER114DD, J114, J114D, J114DD	.300 (7.62)
		ER134, ER134D, ER134DD, J134, J134D, J134DD	.400 (10.16)
		RF100	.315 (8.00)
		RF103	.420 (10.67)
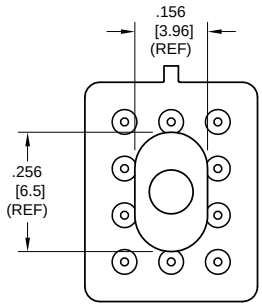 "M9" Pad for Centigrid®	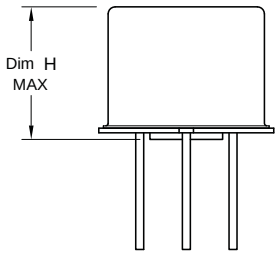	122C, A152	.320 (8.13)
		ER116C, J116C	.300 (7.62)
		ER136C, J136C	.400 (10.16)
		RF180	.325 (8.25)
		A150	.305 (7.75)

Notes:

1. Spacer pad material: Polyester film.
2. To specify an "M4" or "M9" spacer pad, refer to the mounting variants portion of the part numbering example in the applicable datasheet.
3. Dimensions are in inches (mm).
4. Unless otherwise specified, tolerance is ± .010 (.25).
5. Add 10 mΩ to the contact resistance show in the datasheet.
6. Add 0.01 oz. (0.25 g) to the weight of the relay assembly shown in the datasheet.

© 2008 Teledyne Relays

Appendix A: Spreader Pads

Pad designation and bottom view dimensions	Height	For use with the following:	Dim. H Max.
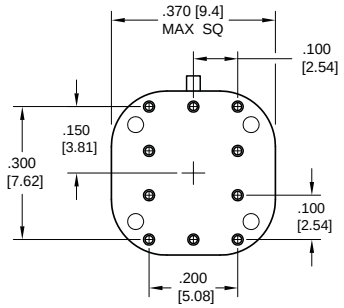 "M" Pad 5/ 6/	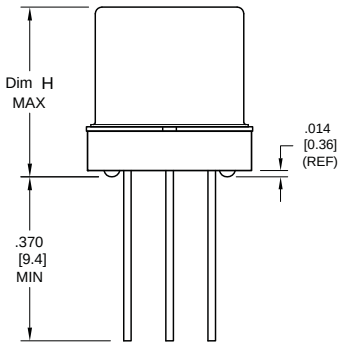	ER411T, J411T, ER412, ER412D ER412DD, J412, J412D, J412DD ER412T, J412T	.388 (9.86)
		712, 712D, 712TN	.393 (9.99)
		ER431T, J431T, ER432, ER432D ER432DD, J432, J432D, J432DD ER432T, J432T	.493 (12.52)
		732, 732D, 732TN	.503 (12.78)
		ER420, J420, ER420D, J420D ER420DD, J420DD, ER421, J421 ER421D, J421D, ER421DD J422D, ER422DD, J422DD, 722	.398 (10.11)
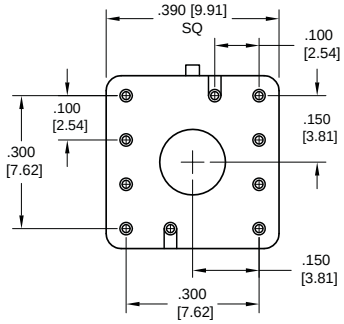 "M2" Pad 7/ 8/	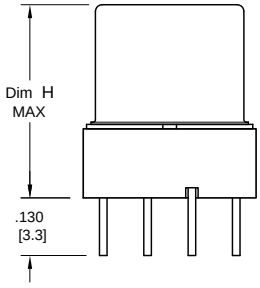	ER411T ER412, ER412D, ER412DD J412, J412D, J412DD	.441 (11.20)
		712, 712D	.451 (11.46)
		ER421, ER421D, ER421DD 722, 732D	.451 (11.46)
		ER431T ER432, ER432D, ER432DD	.546 (13.87)
		732, 732D	.556 (14.12)
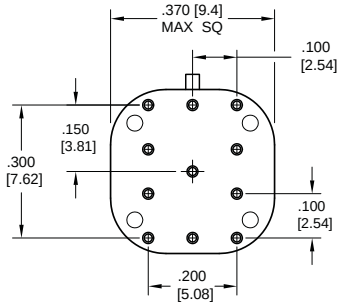 "M3" Pad 5/ 6/ 9/	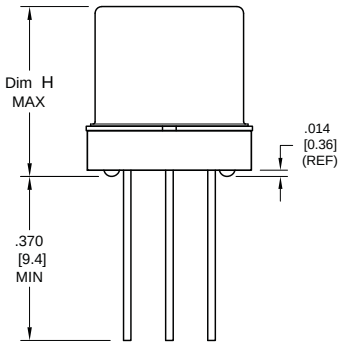	ER411, ER411D, ER411DD ER411TX ER412X, ER412DX, ER412DDX ER412TX	.388 (9.86)
		712X, 712DX, 712TNX	.393 (9.99)
		ER420X, ER420DX, ER420DDX ER421X, ER421DX, ER421DDX ER422X, ER422DX ER422DDX, 722X, 722DDX	.398 (10.11)
		ER431, ER431D, ER431DD ER431TX ER432X, ER432DX, ER432DDX ER432TX	.493 (12.52)
		732X, 732DX, 732TNX	.503 (12.78)

Notes:

1. Spreader pad material: Diallyl Phthalate.
2. To specify an "M", "M2" or "M3" spreader pad, refer to the mounting variants portion of the part number example in the applicable datasheet.
3. Dimensions are in inches (mm).
4. Unless otherwise specified, tolerance is ± .010" (0.25).

5/. Add 25 mΩ to the contact resistance shown in the datasheet.
6/. Add .01 oz. (0.25 g) to the weight of the relay assembly shown in the datasheet.
7/. Add 50 mΩ to the contact resistance shown in the datasheet.
8/. Add 0.025 oz (0.71 g) to the weight of the relay assembly shown in the datasheet.
9/. M3 pad to be used only when the relay has a center pin (e.g. ER411M3-12A, 722XM3-26.)

© 2008 Teledyne Relays

Appendix A: Ground Pin Positions

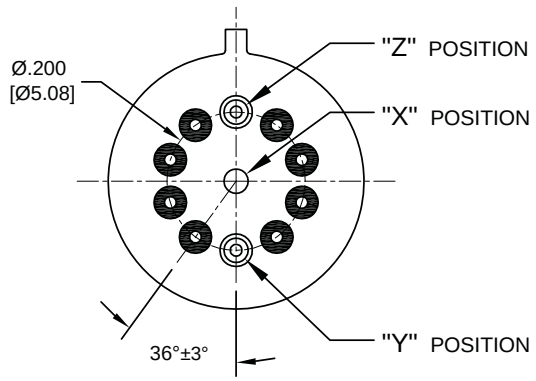

TO-5 Relays:
ER411T, ER412, ER412T, ER420, ER421, ER422, ER431T, ER432, ER432T, 712, 712TN, 400H, 400K, 400V, RF300, RF303, RF341, RF312, RF310, RF313, RF320, RF323

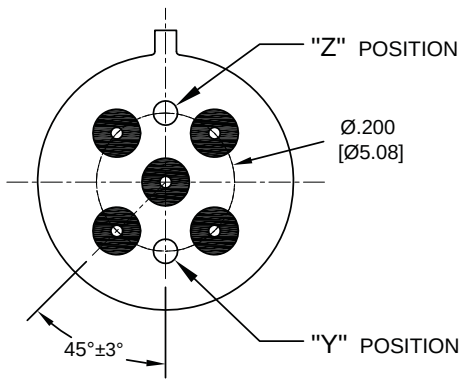

TO-5 Relays:
ER411, ER431, RF311, RF331

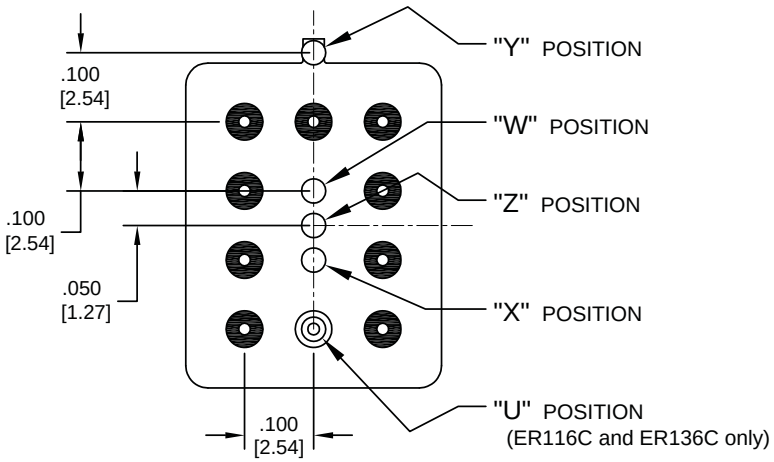

Centigrid® Relays:
RF180, ER116C, 122C, ER136C

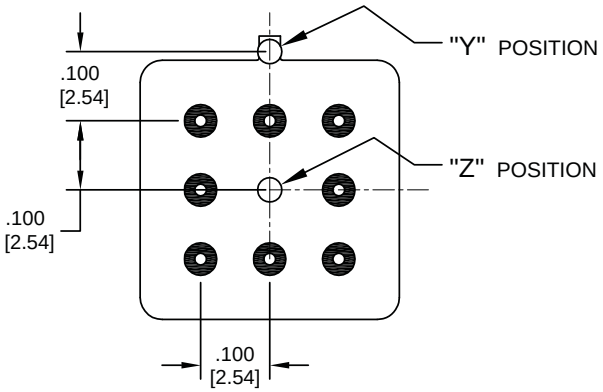

Centigrid® Relays:
RF100, RF103, ER114, ER134, 172

Indicates ground pin position

Indicates glass insulated lead position

Indicates ground pin or lead position depending on relay type

NOTES
1. Terminal views shown
2. Dimensions are in inches (mm)
3. Tolerances: ± .010 (±.25) unless otherwise specified
4. Ground pin positions are within .015 (0.38) dia. of true position
5. Ground pin head dia., 0.035 (0.89) ref: height 0.010 (0.25) ref.
6. Lead dia. 0.017 (0.43) nom.

© 2008 Teledyne Relays