IXYS

Advance Technical Information

HiPerRF™ Power MOSFET

F-Class: MegaHertz Switching

N-Channel Enhancement Mode
Avalanche Rated
Fast Intrinsic Diode

IXFH60N20F
IXFT60N20F

V_{DSS} = 200V
I_{D25} = 60A
$R_{DS(on)}$ ≤ 38mΩ
t_{rr} ≤ 200ns

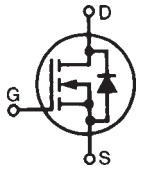

TO-247

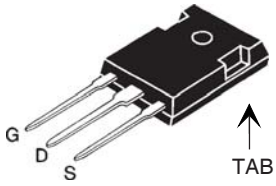

TO-268

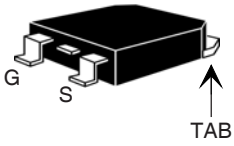

G = Gate D = Drain
S = Source TAB = Drain

Symbol	Test Conditions	Maximum Ratings	
V_{DSS}	T_J = 25°C to 150°C	200	V
V_{DGR}	T_J = 25°C to 150°C, R_{GS} = 1MΩ	200	V
V_{GSS}	Continuous	± 20	V
V_{GSM}	Transient	± 30	V
I_{D25}	T_C = 25°C	60	A
I_{DM}	T_C = 25°C, pulse width limited by T_{JM}	240	A
I_A	T_C = 25°C	60	A
E_{AS}	T_C = 25°C	1.5	J
dV/dt	$I_S \le I_{DM}$, $V_{DD} \le V_{DSS}$, $T_J \le 150°C$	10	V/ns
P_D	T_C = 25°C	320	W
T_J		-55 ... +150	°C
T_{JM}		150	°C
T_{stg}		-55 ... +150	°C
T_L	Maximum lead temperature for soldering	300	°C
T_{SOLD}	Plastic body for 10s	260	°C
M_d	Mounting torque (TO-247)	1.13/10	Nm/lb.in.
Weight	TO-247 TO-268	6 4	g g

Symbol	Test Conditions (T_J = 25°C, unless otherwise specified)	Characteristic Values Min.	Typ.	Max.	
BV_{DSS}	V_{GS} = 0V, I_D = 1mA	200			V
$V_{GS(th)}$	$V_{DS} = V_{GS}$, I_D = 4mA	3.0		5.0	V
I_{GSS}	V_{GS} = ± 20V, V_{DS} = 0V			± 100	nA
I_{DSS}	$V_{DS} = V_{DSS}$ V_{GS} = 0V T_J = 125°C			50 1.5	μA mA
$R_{DS(on)}$	V_{GS} = 10V, $I_D = 0.5 \bullet I_{D25}$, Note 1			38	mΩ

Features

- International standard packages
- Avalanche Rated
- RF capable MOSFETs
- Double metal process for low gate resistnace
- Low package inductance
- Fast intrinsic diode

Advantages

- Easy to mount
- Space savings
- High power density

Applications:

- Switched-mode and resonant-mode power supplies, >500kHz switching
- DC-DC Converters
- Laser Drivers
- 13.5 Mhz industrial applications
- Pulse generation

© 2008 IXYS CORPORATION, All rights reserved

Symbol	Test Conditions (T_J = 25°C unless otherwise specified)	Characteristic Values Min.	Typ.	Max.	
g_{fs}	V_{DS} = 10V, I_D = 0.5 • I_{D25}, Note 1	18	26		S
C_{iss}	V_{GS} = 0V, V_{DS} = 25V, f = 1MHz		2930		pF
C_{oss}			940		pF
C_{rss}			320		pF
$t_{d(on)}$	**Resistive Switching Times**		15		ns
t_r			14		ns
$t_{d(off)}$	V_{GS} = 10V, V_{DS} = 0.5 • V_{DSS}, I_D = 0.5 • I_{D25}		42		ns
t_f	R_G = 2Ω (External)		7.0		ns
$Q_{g(on)}$	V_{GS} = 10V, V_{DS} = 0.5 • V_{DSS}, I_D = 0.5 • I_{D25}		100		nC
Q_{gs}			25		nC
Q_{gd}			46		nC
R_{thJC}				0.39	°C/W
R_{thCS}	(TO-247)		0.25		°C/W

Source-Drain Diode (T_J = 25°C unless otherwise specified)		Characteristic Values Min.	Typ.	Max.	
I_S	V_{GS} = 0V			60	A
I_{SM}	Repetitive, pulse width limited by T_{JM}			240	A
V_{SD}	I_F = I_S, V_{GS} = 0V, Note 1			1.5	V
t_{rr}	I_F = 25A, -di/dt = 100A/μs			200	ns
Q_{RM}	V_R = 100V, V_{GS} = 0V		0.8		μC
I_{RM}			10		A

Note 1: Pulse test, t ≤ 300μs; duty cycle, d ≤ 2%.

TO-247 (IXFH) Outline

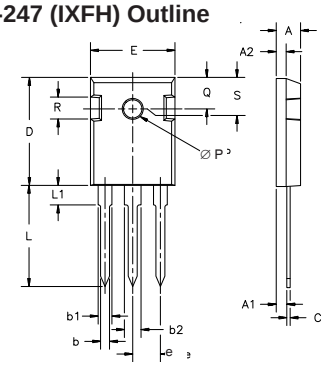

Dim.	Millimeter Min.	Max.	Inches Min.	Max.
A	4.7	5.3	.185	.209
A_1	2.2	2.54	.087	.102
A_2	2.2	2.6	.059	.098
b	1.0	1.4	.040	.055
b_1	1.65	2.13	.065	.084
b_2	2.87	3.12	.113	.123
C	.4	.8	.016	.031
D	20.80	21.46	.819	.845
E	15.75	16.26	.610	.640
e	5.20	5.72	0.205	0.225
L	19.81	20.32	.780	.800
L1		4.50		.177
∅P	3.55	3.65	.140	.144
Q	5.89	6.40	0.232	0.252
R	4.32	5.49	.170	.216
S	6.15	BSC	242	BSC

TO-268 (IXFT) Outline

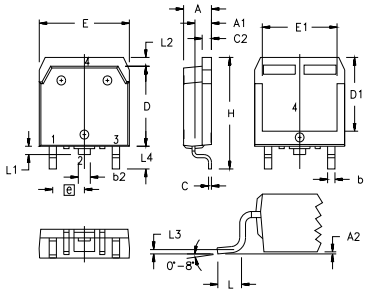

SYM	INCHES MIN	MAX	MILLIMETERS MIN	MAX
A	.193	.201	4.90	5.10
A1	.106	.114	2.70	2.90
A2	.001	.010	0.02	0.25
b	.045	.057	1.15	1.45
b2	.075	.083	1.90	2.10
C	.016	.026	0.40	0.65
C2	.057	.063	1.45	1.60
D	.543	.551	13.80	14.00
D1	.488	.500	12.40	12.70
E	.624	.632	15.85	16.05
E1	.524	.535	13.30	13.60
e	.215 BSC		5.45 BSC	
H	.736	.752	18.70	19.10
L	.094	.106	2.40	2.70
L1	.047	.055	1.20	1.40
L2	.039	.045	1.00	1.15
L3	.010 BSC		0.25 BSC	
L4	.150	.161	3.80	4.10

ADVANCE TECHNICAL INFORMATION

The product presented herein is under development. The Technical Specifications offered are derived from a subjective evaluation of the design, based upon prior knowledge and experience, and constitute a "considered reflection" of the anticipated result. IXYS reserves the right to change limits, test conditions, and dimensions without notice.

IXYS reserves the right to change limits, test conditions, and dimensions.

IXYS MOSFETs and IGBTs are covered by one or moreof the following U.S. patents: 4,835,592 4,850,072 4,881,106 4,931,844 5,017,508 5,034,796 5,049,961 5,063,307 5,187,117 5,237,481 5,381,025 5,486,715 6,162,665 6,259,123 B1 6,306,728 B1 6,404,065 B1 6,534,343 6,583,505 6,683,344 6,710,405 B2 6,710,463 6,727,585 6,759,692 6,771,478 B2 7,005,734 B2 7,063,975 B2 7,071,537 7,157,338B2