# isc N-Channel MOSFET Transistor IXFA24N60X

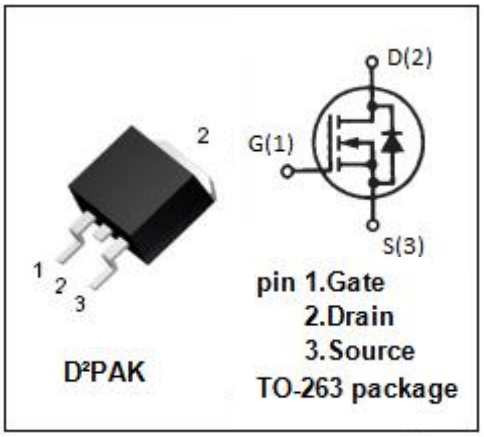


- **FEATURES**
- Static drain-source on-resistance:
  $R_{DS}(on) \leq 175m\Omega @ V_{GS}=10V$
- Fully characterized avalanche voltage and current
- 100% Avalanche Tested
- Minimum Lot-to-Lot variations for robust device performance and reliable operation

- **APPLICATION**
- Switched mode power supplies
- DC-DC converters

- **ABSOLUTE MAXIMUM RATINGS($T_a$=25℃)**

| SYMBOL | PARAMETER | VALUE | UNIT |
|---|---|---|---|
| $V_{DSS}$ | Drain-Source Voltage | 600 | V |
| $V_{GS}$ | Gate-Source Voltage | ±30 | V |
| $I_D$ | Drain Current-Continuous | 24 | A |
| $I_{DM}$ | Drain Current-Single Pulsed | 48 | A |
| $P_D$ | Total Dissipation @$T_C$=25℃ | 400 | W |
| $T_j$ | Operating Junction Temperature | -55~150 | ℃ |
| $T_{stg}$ | Storage Temperature | -55~150 | ℃ |

- **THERMAL CHARACTERISTICS**

| SYMBOL | PARAMETER | MAX | UNIT |
|---|---|---|---|
| $R_{th(j-c)}$ | Junction-to-case thermal resistance | 0.31 | ℃/W |

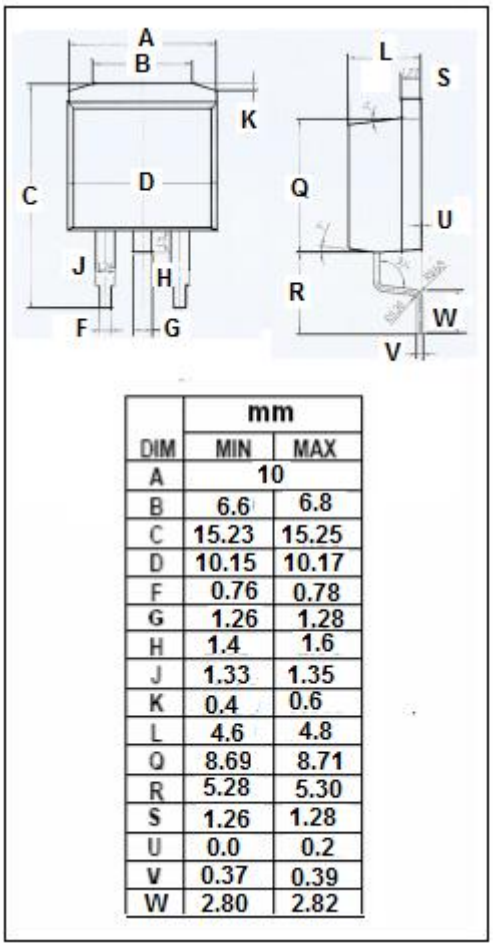


| DIM | mm MIN | MAX |
|---|---|---|
| A | 10 | |
| B | 6.6 | 6.8 |
| C | 15.23 | 15.25 |
| D | 10.15 | 10.17 |
| F | 0.76 | 0.78 |
| G | 1.26 | 1.28 |
| H | 1.4 | 1.6 |
| J | 1.33 | 1.35 |
| K | 0.4 | 0.6 |
| L | 4.6 | 4.8 |
| Q | 8.69 | 8.71 |
| R | 5.28 | 5.30 |
| S | 1.26 | 1.28 |
| U | 0.0 | 0.2 |
| V | 0.37 | 0.39 |
| W | 2.80 | 2.82 |



Download from alldatasheet.com

# isc N-Channel MOSFET Transistor IXFA24N60X

## ELECTRICAL CHARACTERISTICS

**$T_C$=25℃ unless otherwise specified**

| SYMBOL | PARAMETER | CONDITIONS | MIN | MAX | UNIT |
|---|---|---|---|---|---|
| $BV_{DSS}$ | Drain-Source Breakdown Voltage | $V_{GS}$= 0V; $I_D$ = 250 μA | 600 | | V |
| $V_{GS(th)}$ | Gate Threshold Voltage | $V_{DS}$= $V_{GS}$; $I_D$ = 2.5mA | 2.5 | 4.5 | V |
| $R_{DS(on)}$ | Drain-Source On-Resistance | $V_{GS}$=10V; $I_D$= 12A | | 175 | mΩ |
| $I_{GSS}$ | Gate-Source Leakage Current | $V_{GS}$= ±30V;$V_{DS}$=0V | | ±100 | nA |
| $I_{DSS}$ | Drain-Source Leakage Current | $V_{DS}$= $V_{DSS}$; $V_{GS}$= 0V | | 20 | μA |
| | | $V_{DS}$= $V_{DSS}$; $V_{GS}$= 0V;$T_J$= 125℃ | | 750 | |
| $V_{SD}$ | Diode forward voltage | $I_F$= 24A; $V_{GS}$ = 0V | | 1.4 | V |

**NOTICE：**

ISC reserves the rights to make changes of the content herein the datasheet at any time without notification. The information contained herein is presented only as a guide for the applications of our products.

ISC products are intended for usage in general electronic equipment. The products are not designed for use in equipment which require specialized quality and/or reliability, or in equipment which could have applications in hazardous environments, aerospace industry, or medical field. Please contact us if you intend our products to be used in these special applications.

ISC makes no warranty or guarantee regarding the suitability of its products for any particular purpose, nor does ISC assume any liability arising from the application or use of any products, and specifically disclaims any and all liability, including without limitation special, consequential or incidental damages.



Download from alldatasheet.com