LCD GROUP

ITM-1602BSTL

Trade Mark Electronics
tel: +32 (0)3-325 19 10 / fax: +32 (0)3-326 05 10
tel: +31 (0)73-612 58 52 / fax: +31 (0)73-691 11 80
e-mail: sales@tme-elec.com
url: www.tme-elec.com

① EXTERNAL DIMENSION

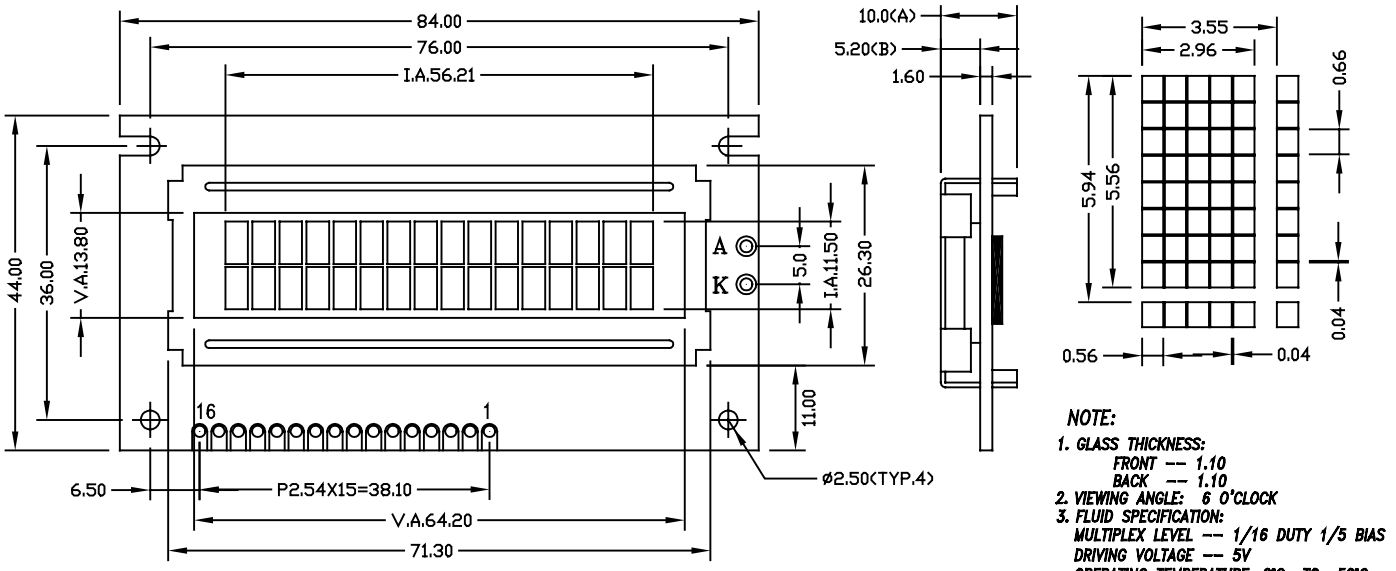

	A	B
LED B/L	13.40mm	9.0mm
WITHOUT B/L	10.00mm	5.2mm

NOTE:

1. *GLASS THICKNESS:*
   FRONT -- 1.10
   BACK -- 1.10
2. *VIEWING ANGLE: 6 O'CLOCK*
3. *FLUID SPECIFICATION:*
   MULTIPLEX LEVEL -- 1/16 DUTY 1/5 BIAS
   DRIVING VOLTAGE -- 5V
   OPERATING TEMPERATURE: 0°C TO 50°C
   STORAGE TEMPERATURE: -20°C TO 70°C
4. *CONNECTOR: ZEBRA*
5. *STN YELLOW-GREEN MODE*
6. *TRANSFLECTIVE*

② MECHANICAL DATA

ITEM	SPECFICATION	UNIT
Module Size (W X H X T)	84.0 X 44.0 X 10.0	mm
Viewing Area (W X H)	64.2X 13.8	mm
Internal Area (W X H)	56.21 X 11.50	mm
Dot Pitch (W X H)	0.70 X 0.60	mm
Dot Size (W X H)	0.66 X 0.56	mm
Character Pith (WXH)	5.94 X 3.55	mm
Character Size (W X H)	5.56 X 2.96	mm
Number of Character	16 Character X 2 Line	Char

③ PIN CONFIGURATION

ITEM	SYMBOL	LEVEL	DESCRIPTION
1	A	H	LED BACKLIGHT +
2	K	L	LED BACKLIGHT -
3	VSS	L	Power GND
4	VDD	H	Power Positive
5	VEE	L	Voltage For LCD Panel Drive
6	RS	H/L	Register Select
7	R/W	H/L	Read/Write Select
8	E	H/L	Read/Write Enable
9	DBO	H/L	Data Bus
10	DB1	H/L	
11	DB2	H/L	
12	DB3	H/L	
13	DB4	H/L	
14	DB5	H/L	
15	DB6	H/L	
16	DB7	H/L	

④ BLOCK DIAGRAM

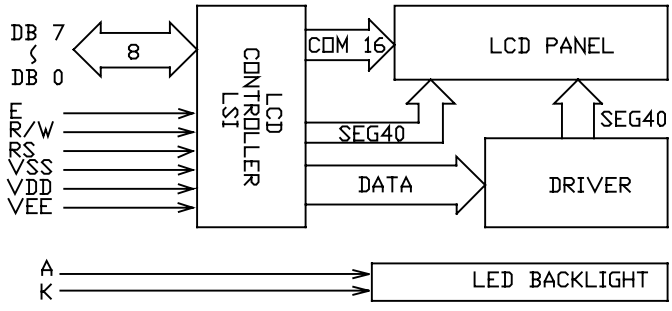

⑤ ABSOLUTE MAXIMUM RATINGS(25°C)

PARAMETER	SYMBOL	MIN.	MAX.	UNIT
Supply Voltage Logic	V_{DD}	-0.3	+7.0	V
Supply Voltage Driver	V_{LCD}	V_{DD}-15.0	V_{DD}+0.3	V
Input Voltage	V_{IN}	-0.3	V_{DD}+0.3	V