4-20 mA vibration transmitter modules

iT150 series

SPECIFICATIONS

INPUT	
Sensor types	IEPE accelerometers, IEPE piezovelocity transducers, IEPE dual output (vibration and temperature) sensors
Sensor senstivities accepted:	
Accelerometer	10, 100, 500 mV/g
Piezovelocity	10, 100, 500 mV/ips
Dual output[1]	10 mV/°C
Frequency response:	
Acceleration[2]	0.2 Hz - 20 kHz (-3 dB, -0.1 dB)
Velocity	0.2 Hz - 5 kHz
Sensor powering:	
Open circuit voltage	24 VDC, ±5%
Constant-current	4.5 mA, ±20%
Maximum dynamic signal input, for linear response	20 Volts peak-to-peak
OUTPUT, 4-20 mA loop current	
Full scale, ±2%	see Ordering information on page 2
Output type	true RMS, equivalent peak, equivalent peak-peak, true peak
Maximum 4-20 mA loop load resistance	500 Ω
Accuracy	±0.2% of full scale
Turn on time	<30 seconds
OUTPUT, buffered dynamic	
Gain, RTI sensor	1.0 ±2%
Noise RTO, broadband, 1 Hz - 10 kHz, RMS	≤0.0001 Volts
Output type	DC-coupled
ENVIRONMENTAL	
Power:	
Voltage (Vin)	11 - 32 VDC
Current draw	125 mA at 24 VDC (3 watts max)
Temperature, operating, ambient	–40° to +70°C
PHYSICAL	
Mounting	snap into 35 mm DIN rail
Dimensions:	
Width	22.5 mm (0.86”)
Depth (front of BNC to back of DIN rail)	127 mm (4.98”)
Height	100 mm (3.90”)



Key features

- Temperature measurement
- Slim 22.5 mm case
- Front panel BNC for dynamic signal output
- Manufactured in ISO 9001 facility

For dimensions and ordering information, see page 2.

For system architecture, see page 3.

Notes: [1] Compatible with Wilcoxon models 786T and 787T (measurement range: 0° to 120°C, input signal: 0 - 1.2 VDC).

[2] True peak frequency response: 10 Hz to 25 kHz.

CE

Note: Due to continuous process improvement, specifications are subject to change without notice. This document is cleared for public release.

Wilcoxon Sensing Technologies
An Amphenol Company

8435 Progress Drive
Frederick, MD 21701
USA

Tel: +1 (301) 330-8811
Fax: +1 (301) 330-8873
info@wilcoxon.com

buy.wilcoxon.com
www.wilcoxon.com

Dimensions

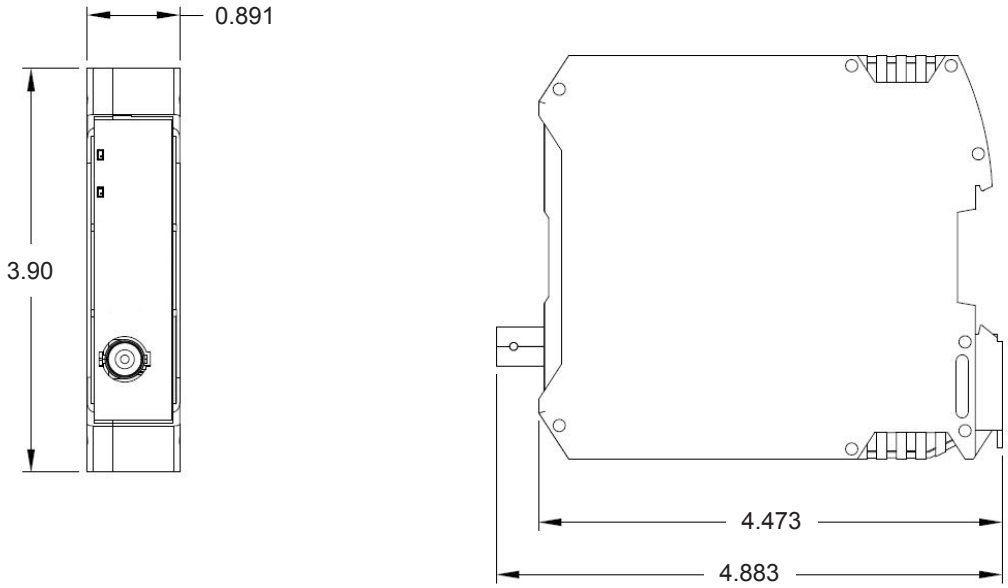

Ordering information

iT150 – ☐ – ☐ – ☐ – ☐ – ☐ – ☐ – ☐ – ☐

Input type	
A	Acceleration
V	Velocity

Sensitivity	
10	mV/g, mV/ips
100	
500	

Output type	
A	Acceleration
V	Velocity
D**	Displacement

Output type	Units	Full scale
A	g	**1, 5, 10, 20, 30, 50**
	m/s^2	**50, 100, 200, 300, 500**
V	ips	**0.5, 1, 2, 3, 5**
	mm/s	**15, 20, 25, 30, 45, 50, 100**
D**	mils	**10, 20, 25, 100**
	mm	**0.2, 0.5, 1, 2, 3, 4, 5**

Detector type	
RMS	True RMS
P	Peak (equiv.)
PP	Peak-to-peak (equiv.)
TP*	True peak (10-25,000 Hz)

Output type	Units
A	**g**
	m/s/s (m/s^2)
V	**ips**
	mm/s
D**	**mils****
	mm

Detector type	Output type	F_{MIN} (Hz) – F_{MAX} (Hz)	
RMS Peak Peak-to-peak	A, V, D**	**0.2 – 200**	
		0.5 – 500	
	A, V	**1 – 1,000**	
		10 – 1,000	ISO 10816-3
		2 – 2,000	
		5 – 5,000	
	A	**10 – 10,000**	
		20 – 20,000	
True peak*	A	**10 – 25,000**	
		F_{MIN} fixed with F_{MAX} (select desired frequency range)	

Selectable parameters are in **bold.**

Notes:

* True peak detection option available for Input/Output type “A” only.

** Displacement output option available for Input type “V” only.

Note: Due to continuous process improvement, specifications are subject to change without notice. This document is cleared for public release.

Wilcoxon Sensing Technologies
An Amphenol Company

8435 Progress Drive
Frederick, MD 21701
USA

Tel: +1 (301) 330-8811
Fax: +1 (301) 330-8873
info@wilcoxon.com

buy.wilcoxon.com
www.wilcoxon.com

System architecture

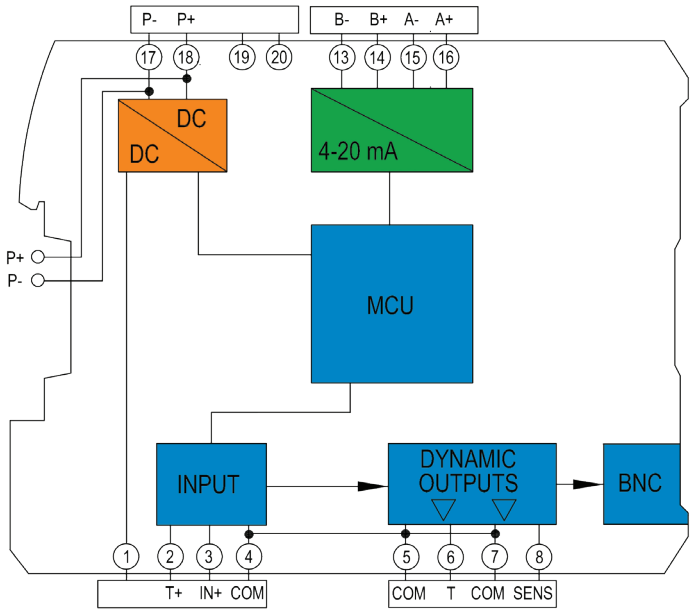

Power input

4-20 mA outputs

Input/output µprocessor

IO Port	Terminal numbers and signal assignments
Vibration sensor	1 - No connection 2 - Temperature sensor (in T+) 3 - Signal in / Sensor Power (IN+) 4 - Circuit common (COM)
Temperature dynamic output	5 - Circuit common (COM) 6 - Temperature out (T)
Sensor dynamic output	7 - Circuit common (COM) 8 - Sensor out (SENS)
4-20 mA Loop B Temperature	13 - B- 14 - B+
4-20 mA Loop A Vibration	15 - A- 16 - A+
Power input	17 - P- 18 - P+
Not used	19 20

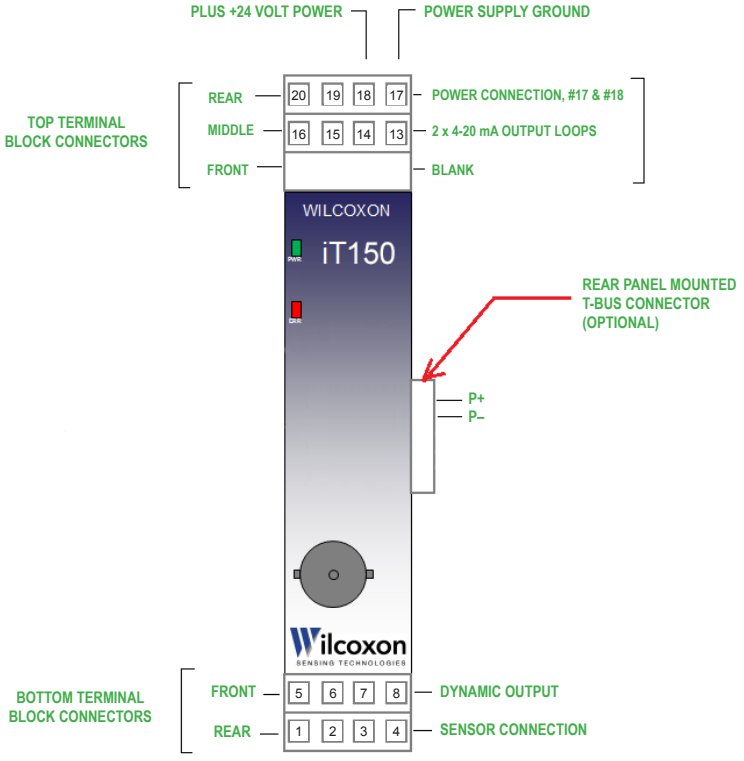

Note: Due to continuous process improvement, specifications are subject to change without notice. This document is cleared for public release.

Wilcoxon Sensing Technologies
An Amphenol Company

8435 Progress Drive
Frederick, MD 21701
USA

Tel: +1 (301) 330-8811
Fax: +1 (301) 330-8873
info@wilcoxon.com

buy.wilcoxon.com
www.wilcoxon.com