RECTRON SEMICONDUCTOR
TECHNICAL SPECIFICATION

ISR40100C

SCHOTTKY BARRIER RECTIFIER

VOLTAGE RANGE 100 Volts CURRENT 40 Amperes

FEATURES

* Low switching noise
* Low forward voltage drop
* Low thermal resistance
* High current capability
* High switching capability
* High surge capabitity
* High reliability
* P/N suffix V means AEC-Q101 qualified, e.g:ISR40100CV

MECHANICAL DATA

* Case: ITo-220 molded plastic
* Epoxy: Device has UL flammability classification 94V-O
* Lead: MIL-STD-202E method 208C guaranteed
* Mounting position: Any

MAXIMUM RATINGS AND ELECTRICAL CHARACTERISTICS

Ratings at 25 °C ambient temperature unless otherwise specified.
resistive or inductive load.

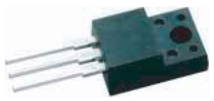

ITO-220

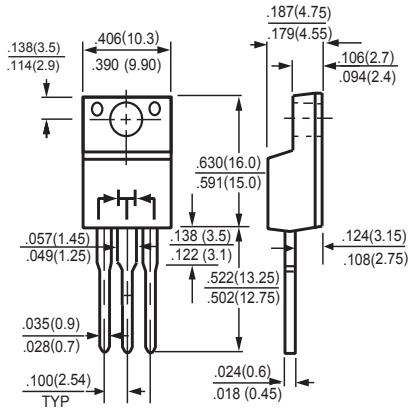

Dimensions in inches and (millimeters)

MAXIMUM RATINGS (@ TA=25 °C unless otherwise noted)

RATINGS	SYMBOL	ISR40100C	UNITS
Maximum Recurrent Peak Reverse Voltage	V_{RRM}	100	Volts
Maximum RMS Voltage	V_{RMS}	70	Volts
Maximum DC Blocking Voltage	V_{DC}	100	Volts
Maximum Average Forward Rectified Current at Derating Case Temperature	I_O	40	Amps
Peak Forward Surge Current 8.3 ms single half sine-wave superimposed on rated load (JEDEC method)	I_{FSM}	300	Amps
Typical Current Squarad Time	I^2t	373.3	A^2Sec
Typical Thermal Resistance (Note 1)	$R_{\theta JC}$	6.7	°C/W
	$R_{\theta JA}$	8.3	
Operating Temperature Range	T_J	150	°C
Storage Temperature Range	T_{STG}	-55 to + 150	°C

ELECTRICAL CHARACTERISTICS(@TA=25 °C unless otherwise noted)

CHARACTERISTICS		SYMBOL	Typ	Max	UNITS
Maximum Instantaneous Forward Voltage	I_F =10A	V_F	.54	–	Volts
	I_F =20A		.67	.75	
Maximum Average Reverse Current	@T_A = 25°C	I_R	60		uA
at Rated DC Blocking Voltage	@T_A = 150°C		3.0		mA

NOTES : 1. Thermal Resistance : Heat-sink mounted.
2. Suffix "A" = Common Anode.
3."ROHS compliant".

2019-07/52
REV:C

RATING AND CHARACTERISTICS CURVES (ISR40100C)

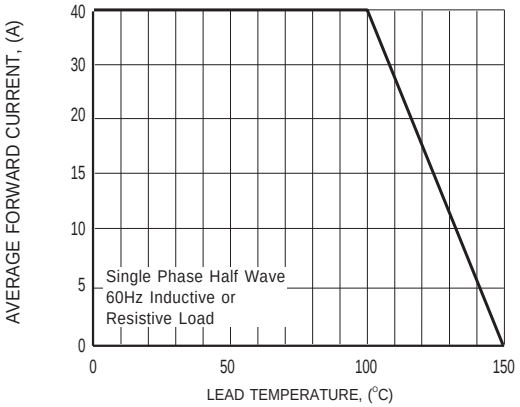

FIG.1 TYPICAL FORWARD CURRENT DERATING CURVE

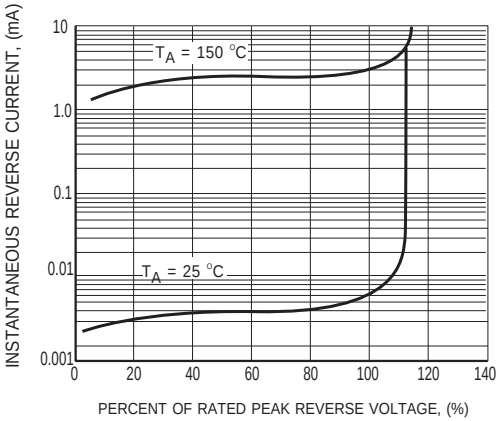

FIG.2 MAXIMUM REVERSE CHARACTERISTICS

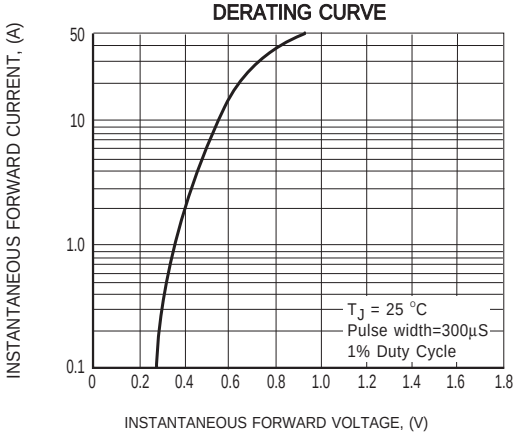

FIG.3 TYPICAL INSTANTANEOUS FORWARD CHARACTERISTICS

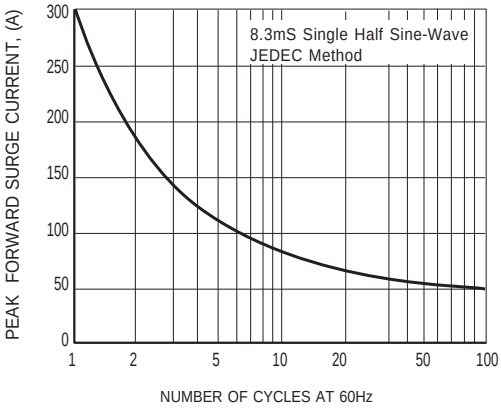

FIG.4 MAXIMUM NON-REPETITIVE FORWARD SURGE CURRENT

RECTRON

Attachment information about ISR40100C

1. Internal Circuit



2. Marking on the body

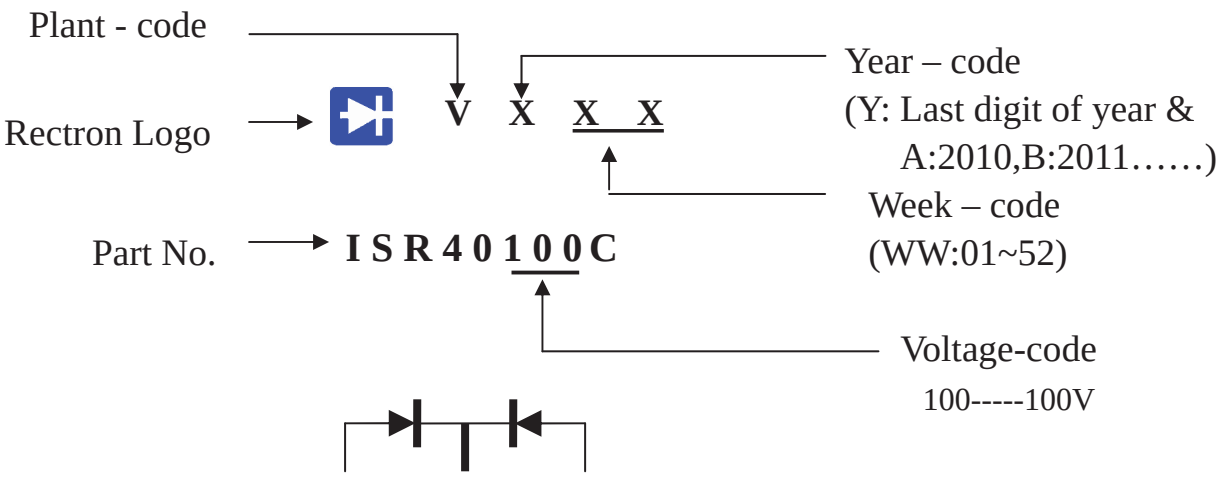

PACKAGING OF DIODE AND BRIDGE RECTIFIERS

TUBE PACK

PACKAGE	PACKING CODE	EA PER BOX	INNER BOX SIZE (mm)	CARTON SIZE (mm)	EA PER CARTON	WEIGHT(Kg)
(I)TO-220/TO-220(A)	-C	2,000	550*140*92	572*308*120	4,000	11.80

DISCLAIMER NOTICE

Rectron Inc reserves the right to make changes without notice to any product specification herein, to make corrections, modifications, enhancements or other changes. Rectron Inc or anyone on its behalf assumes no responsibility or liability for any errors or inaccuracies. Data sheet specifications and its information contained are intended to provide a product description only. "Typical" parameters which may be included on RECTRON data sheets and/ or specifications can and do vary in different applications and actual performance may vary over time. Rectron Inc does not assume any liability arising out of the application or use of any product or circuit.

Rectron products are not designed, intended or authorized for use in medical, life-saving implant or other applications intended for life-sustaining or other related applications where a failure or malfunction of component or circuitry may directly or indirectly cause injury or threaten a life without expressed written approval of Rectron Inc. Customers using or selling Rectron components for use in such applications do so at their own risk and shall agree to fully indemnify Rectron Inc and its subsidiaries harmless against all claims, damages and expenditures.