

Is Now Part of



ON Semiconductor®

To learn more about ON Semiconductor, please visit our website at
www.onsemi.com

Please note: As part of the Fairchild Semiconductor integration, some of the Fairchild orderable part numbers will need to change in order to meet ON Semiconductor's system requirements. Since the ON Semiconductor product management systems do not have the ability to manage part nomenclature that utilizes an underscore (_), the underscore (_) in the Fairchild part numbers will be changed to a dash (-). This document may contain device numbers with an underscore (_). Please check the ON Semiconductor website to verify the updated device numbers. The most current and up-to-date ordering information can be found at www.onsemi.com. Please email any questions regarding the system integration to Fairchild_questions@onsemi.com.

ON Semiconductor and the ON Semiconductor logo are trademarks of Semiconductor Components Industries, LLC dba ON Semiconductor or its subsidiaries in the United States and/or other countries. ON Semiconductor owns the rights to a number of patents, trademarks, copyrights, trade secrets, and other intellectual property. A listing of ON Semiconductor's product/patent coverage may be accessed at www.onsemi.com/site/pdf/Patent-Marking.pdf. ON Semiconductor reserves the right to make changes without further notice to any products herein. ON Semiconductor makes no warranty, representation or guarantee regarding the suitability of its products for any particular purpose, nor does ON Semiconductor assume any liability arising out of the application or use of any product or circuit, and specifically disclaims any and all liability, including without limitation special, consequential or incidental damages. Buyer is responsible for its products and applications using ON Semiconductor products, including compliance with all laws, regulations and safety requirements or standards, regardless of any support or applications information provided by ON Semiconductor. "Typical" parameters which may be provided in ON Semiconductor data sheets and/or specifications can and do vary in different applications and actual performance may vary over time. All operating parameters, including "Typicals" must be validated for each customer application by customer's technical experts. ON Semiconductor does not convey any license under its patent rights nor the rights of others. ON Semiconductor products are not designed, intended, or authorized for use as a critical component in life support systems or any FDA Class 3 medical devices or medical devices with a same or similar classification in a foreign jurisdiction or any devices intended for implantation in the human body. Should Buyer purchase or use ON Semiconductor products for any such unintended or unauthorized application, Buyer shall indemnify and hold ON Semiconductor and its officers, employees, subsidiaries, affiliates, and distributors harmless against all claims, costs, damages, and expenses, and reasonable attorney fees arising out of, directly or indirectly, any claim of personal injury or death associated with such unintended or unauthorized use, even if such claim alleges that ON Semiconductor was negligent regarding the design or manufacture of the part. ON Semiconductor is an Equal Opportunity/Affirmative Action Employer. This literature is subject to all applicable copyright laws and is not for resale in any manner.

FAIRCHILD SEMICONDUCTOR®

November 2013

ISL9R1560G2, ISL9R1560P2, ISL9R1560S2, ISL9R1560S3S

15 A, 600 V, STEALTH™ Diode

Features

- Stealth Recovery t_{rr} = 29.4 ns (@ I_F = 15 A)
- Max Forward Voltage, V_F = 2.2 V (@ T_C = 25°C)
- 600 V Reverse Voltage and High Reliability
- Avalanche Energy Rated
- RoHS Compliant

Applications

- SMPS
- Hard Switched PFC Boost Diode
- UPS Free Wheeling Diode
- Motor Drive FWD
- SMPS FWD
- Snubber Diode

Description

The ISL9R1560G2, ISL9R1560P2, ISL9R1560S2, ISL9R1560S3S is a STEALTH™ diode optimized for low loss performance in high frequency hard switched applications. The STEALTH™ family exhibits low reverse recovery current (I_{rr}) and exceptionally soft recovery under typical operating conditions. This device is intended for use as a free wheeling or boost diode in power supplies and other power switching applications. The low I_{rr} and short ta phase reduce loss in switching transistors. The soft recovery minimizes ringing, expanding the range of conditions under which the diode may be operated without the use of additional snubber circuitry. Consider using the STEALTH™ diode with an SMPS IGBT to provide the most efficient and highest power density design at lower cost.

Package

JEDEC STYLE TO-247-2L

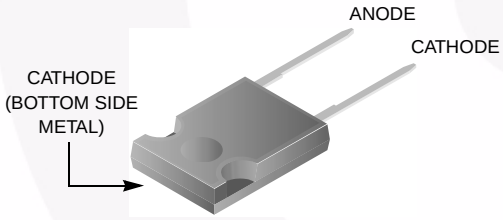

JEDEC TO-220AC-2L

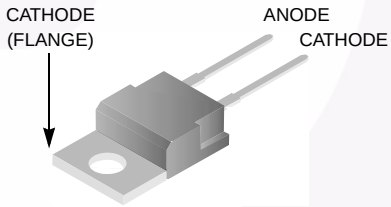

JEDEC STYLE TO-262(I^2-PAK)

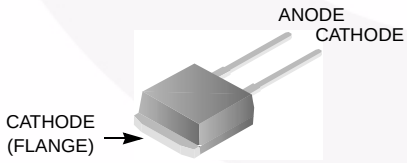

JEDEC TO-263AB(D^2-PAK)

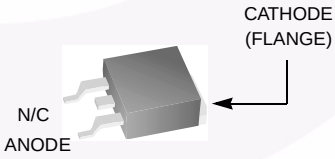

Symbol



Device Maximum Ratings T_C = 25°C unless otherwise noted

Symbol	Parameter	Ratings	Unit
V_{RRM}	Repetitive Peak Reverse Voltage	600	V
V_{RWM}	Working Peak Reverse Voltage	600	V
V_R	DC Blocking Voltage	600	V
$I_{F(AV)}$	Average Rectified Forward Current (T_C = 145°C)	15	A
I_{FRM}	Repetitive Peak Surge Current (20kHz Square Wave)	30	A
I_{FSM}	Nonrepetitive Peak Surge Current (Halfwave 1 Phase 60Hz)	200	A

©2001 Fairchild Semiconductor Corporation

Symbol	Parameter	Ratings	Unit
P_D	Power Dissipation	150	W
E_{AVL}	Avalanche Energy (1 A, 40 mH)	20	mJ
T_J, T_{STG}	Operating and Storage Temperature Range	-55 to 175	°C
T_L	Maximum Temperature for Soldering	300	°C
T_{PKG}	Leads at 0.063in (1.6mm) from Case for 10s Package Body for 10s, See Techbrief TB334	260	°C

CAUTION: Stresses above those listed in "Device Maximum Ratings" may cause permanent damage to the device. This is a stress only rating and operation of the device at these or any other conditions above those indicated in the operational sections of this specification is not implied.

Package Marking and Ordering Information

Part Number	Top Mark	Package	Packing Method	Reel Size	Tape Width	Quantity
ISL9R1560G2	ISL9R1560G2	TO-247-2L	Tube	N/A	N/A	30
ISL9R1560P2	ISL9R1560P2	TO-220AC-2L	Tube	N/A	N/A	50
ISL9R1560S2	ISL9R1560S2	TO-262(I^2-PAK)	Tube	N/A	N/A	50
ISL9R1560S3ST	ISL9R1560S3S	TO-263(D^2-PAK)	Reel	13" dia	24mm	800

Electrical Characteristics T_C = 25°C unless otherwise noted

Symbol	Parameter	Test Conditions		Min	Typ	Max	Unit
Off State Characteristics							
I_R	Instantaneous Reverse Current	V_R = 600 V	T_C = 25°C	-	-	100	µA
			T_C = 125°C	-	-	1.0	mA
On State Characteristics							
V_F	Instantaneous Forward Voltage	I_F = 15 A	T_C = 25°C	-	1.8	2.2	V
			T_C = 125°C	-	1.65	2.0	V
Dynamic Characteristics							
C_J	Junction Capacitance	V_R = 10 V, I_F = 0 A		-	62	-	pF
Switching Characteristics							
t_{rr}	Reverse Recovery Time	I_F = 1 A, di_F/dt = 100 A/µs, V_R = 30 V		-	25	30	ns
		I_F=15 A, di_F/dt = 100 A/µs, V_R = 30 V		-	35	40	ns
t_{rr}	Reverse Recovery Time	I_F = 15 A, di_F/dt = 200 A/µs, V_R = 390 V, T_C = 25°C		-	29.4	-	ns
I_{rr}	Reverse Recovery Current			-	3.5	-	A
Q_{rr}	Reverse Recovered Charge			-	57	-	nC
t_{rr}	Reverse Recovery Time	I_F = 15 A, di_F/dt = 200 A/µs, V_R = 390 V, T_C = 125°C		-	90	-	ns
S	Softness Factor (t_b/t_a)			-	2.0	-	
I_{rr}	Reverse Recovery Current			-	5.0	-	A
Q_{rr}	Reverse Recovered Charge			-	275	-	nC
t_{rr}	Reverse Recovery Time	I_F = 15 A, di_F/dt = 800 A/µs, V_R = 390 V, T_C = 125°C		-	52	-	ns
S	Softness Factor (t_b/t_a)			-	1.36	-	
I_{rr}	Reverse Recovery Current			-	13.5	-	A
Q_{rr}	Reverse Recovered Charge			-	390	-	nC
di_M/dt	Maximum di/dt during t_b			-	800	-	A/µs
Thermal Characteristics							
$R_{\theta JC}$	Thermal Resistance Junction to Case			-	-	1.0	°C/W
$R_{\theta JA}$	Thermal Resistance Junction to Ambient	TO-247		-	-	30	°C/W
$R_{\theta JA}$	Thermal Resistance Junction to Ambient	TO-220		-	-	62	°C/W
$R_{\theta JA}$	Thermal Resistance Junction to Ambient	TO-262		-	-	62	°C/W
$R_{\theta JA}$	Thermal Resistance Junction to Ambient	TO-263		-	-	62	°C/W

©2001 Fairchild Semiconductor Corporation

Typical Performance Curves

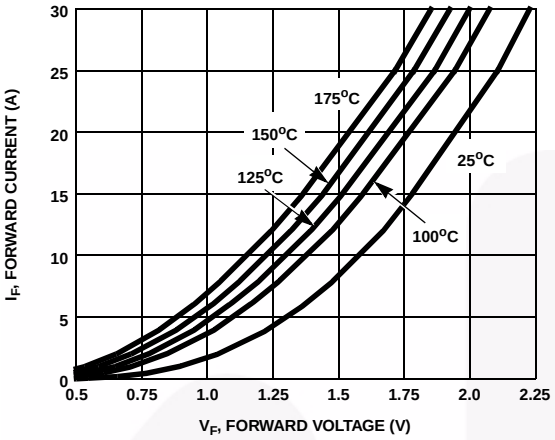

Figure 1. Forward Current vs Forward Voltage

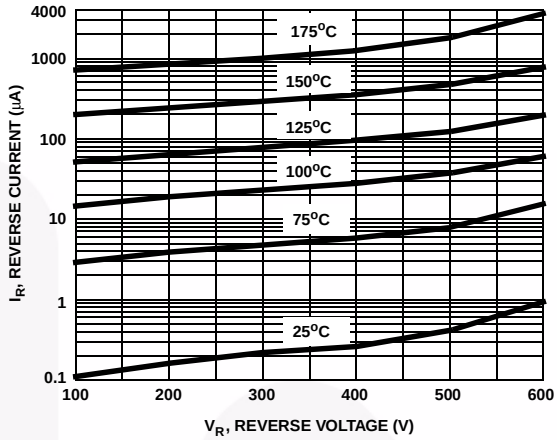

Figure 2. Reverse Current vs Reverse Voltage

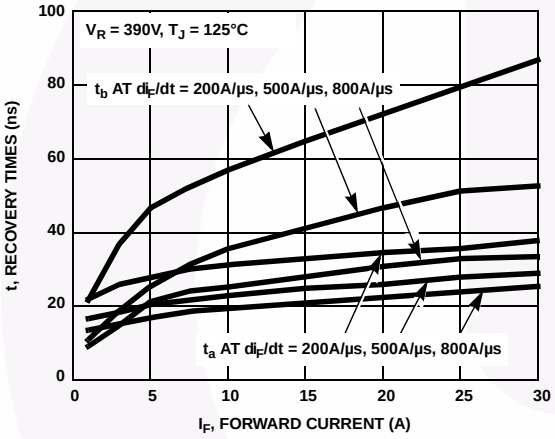

Figure 3. t_a and t_b Curves vs Forward Current

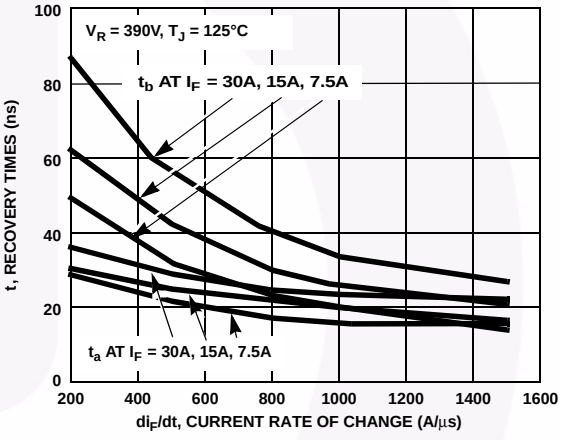

Figure 4. t_a and t_b Curves vs di_F/dt

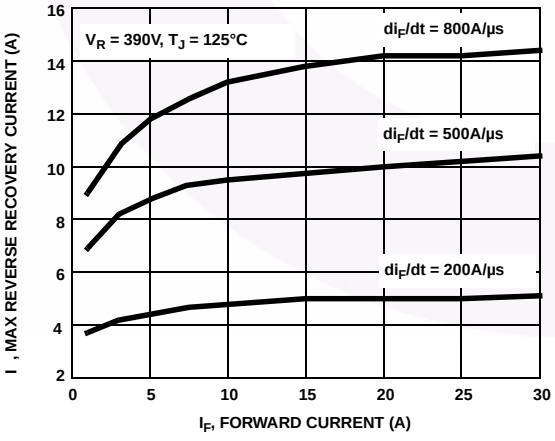

Figure 5. Maximum Reverse Recovery Current vs Forward Current

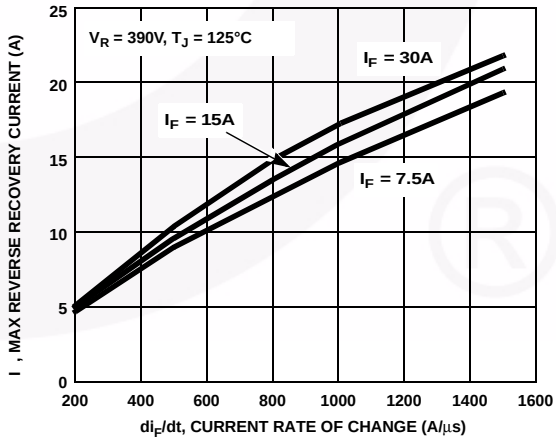

Figure 6. Maximum Reverse Recovery Current vs di_F/dt

Typical Performance Curves (Continued)

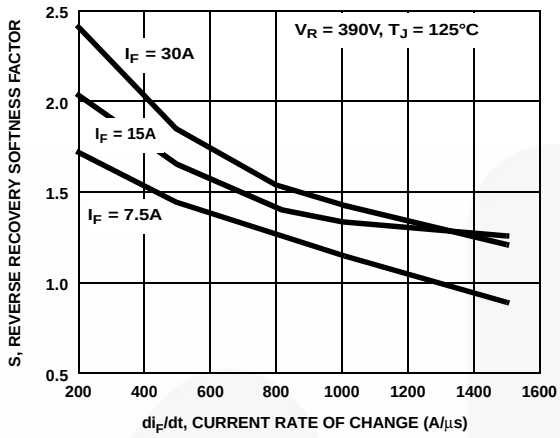

Figure 7. Reverse Recovery Softness Factor vs di_F/dt

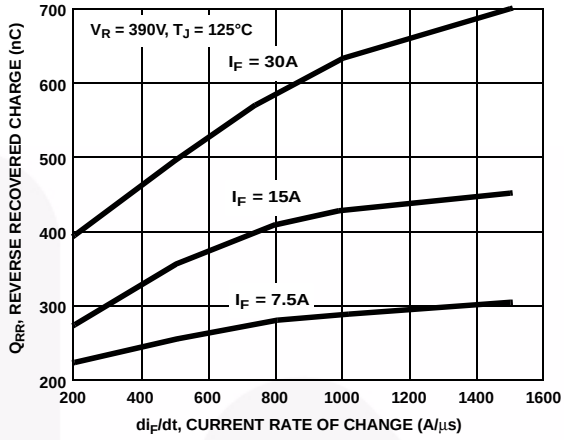

Figure 7. Reverse Recovered e di d

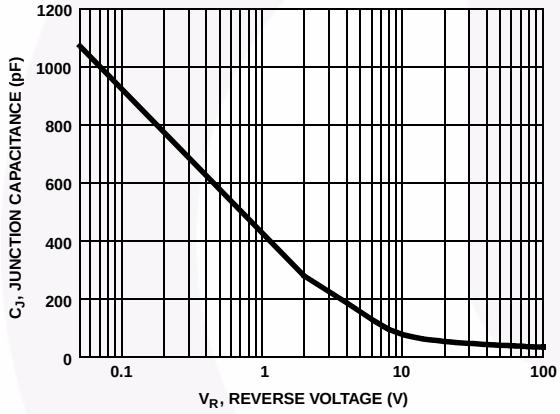

Figure 9. Junction Capacitance vs Reverse Voltage

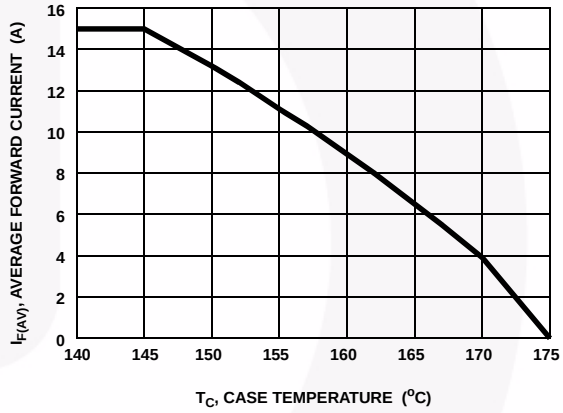

Figure 10. DC Current Derating Curve

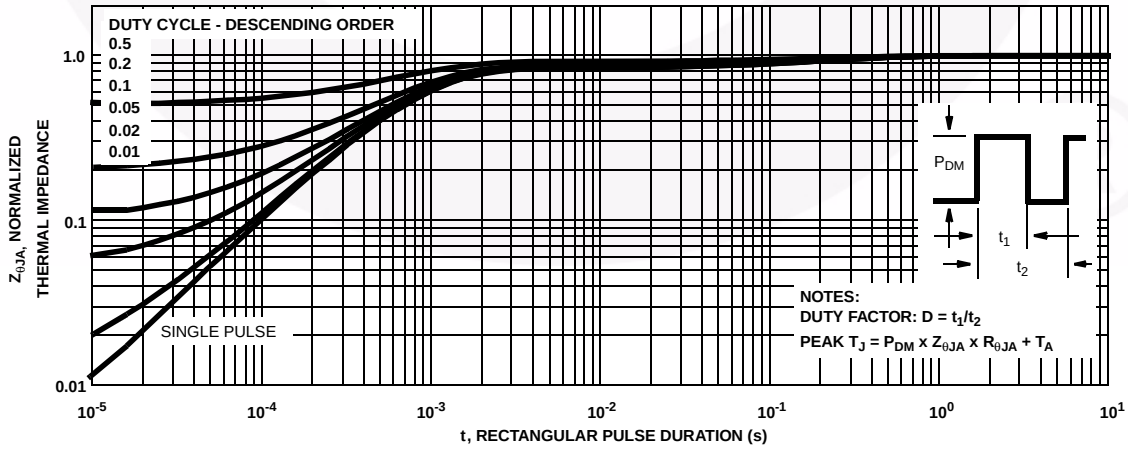

Figure 11. Normalized Maximum Transient Thermal Impedance

Test Circuit and Waveforms

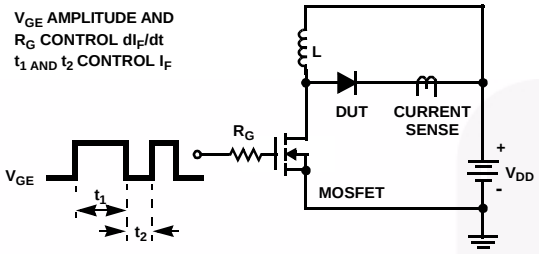

Figure 12. t_{rr} Test Circuit

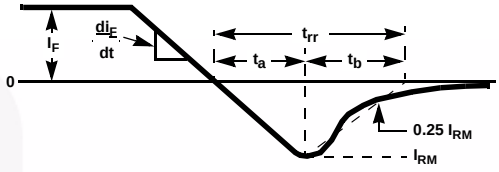

Figure 13. t_{rr} Waveforms and Definitions

I = 1A
L = 40mH
R < 0.1Ω
V_{DD} = 50V
$E_{AVL} = 1/2LI^2 [V_{R(AVL)}/(V_{R(AVL)} - V_{DD})]$
Q_1 = IGBT (BV_{CES} > DUT $V_{R(AVL)}$)

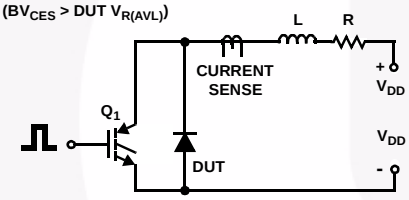

Figure 14. Avalanche Energy Test Circuit

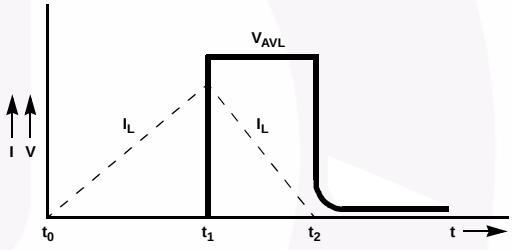

Figure 15. Avalanche Current and Voltage Waveforms

Mechanical Dimensions

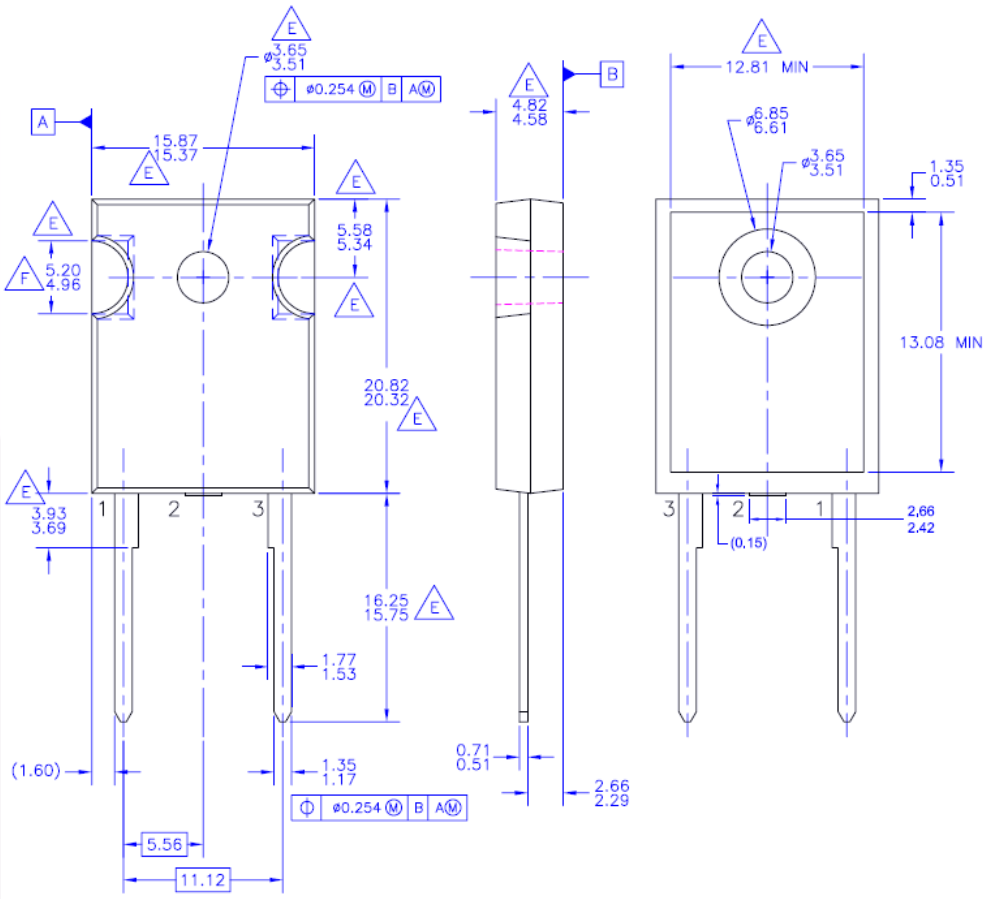

Figure 16. TO-247 2L - TO247,MOLDED,2LD, JEDEC OPTION AB

Package drawings are provided as a service to customers considering Fairchild components. Drawings may change in any manner without notice. Please note the revision and/or date on the drawing and contact a Fairchild Semiconductor representative to verify or obtain the most recent revision. Package specifications do not expand the terms of Fairchild's worldwide terms and conditions, specifically the warranty therein, which covers Fairchild products.

Always visit Fairchild Semiconductor's online packaging area for the most recent package drawings:

http://www.fairchildsemi.com/package/packageDetails.html?id=PN_TO247-002.

Mechanical Dimensions

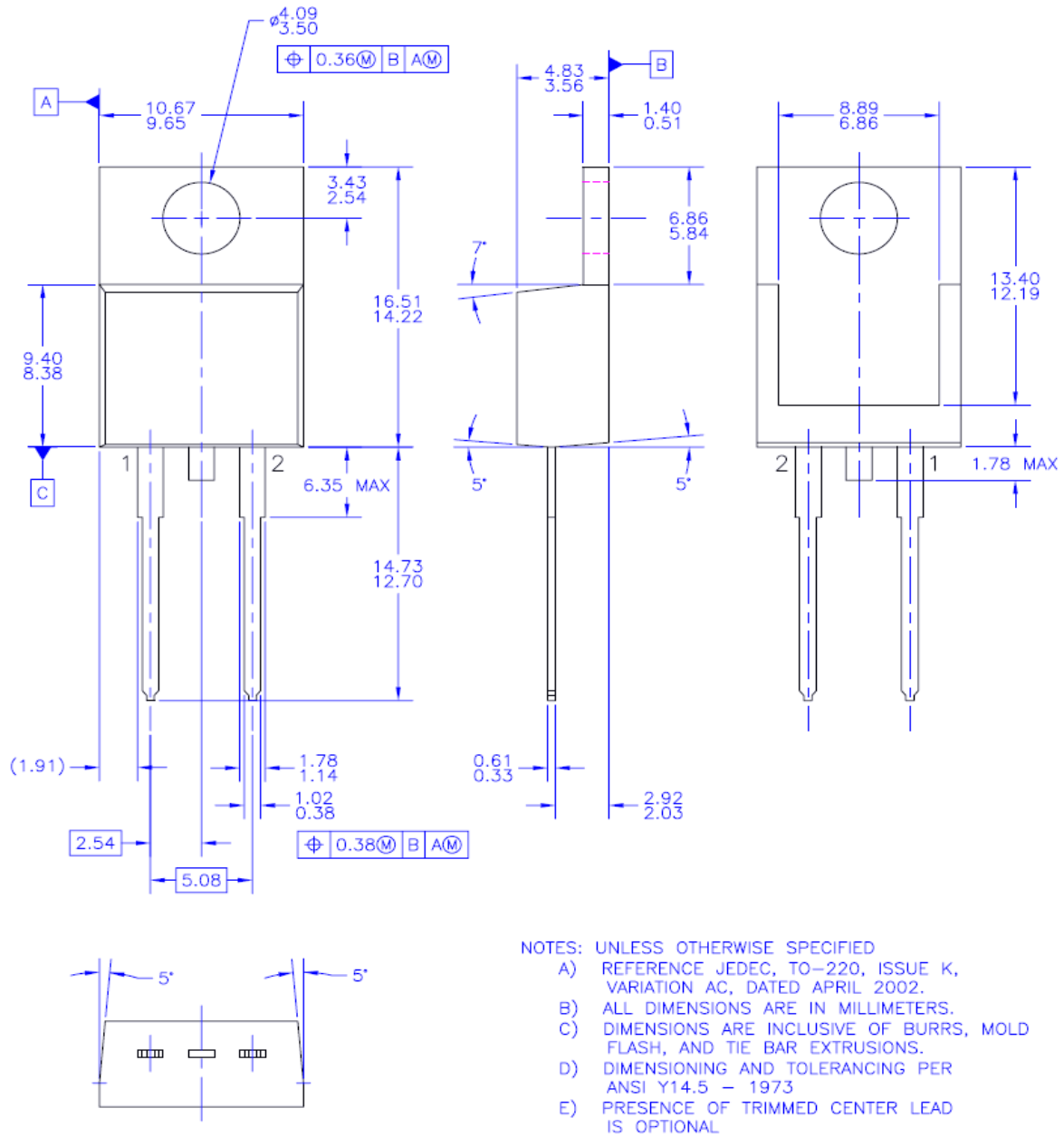

Figure 1 . TO-220 2L - 2LD,TO220,JEDEC TO-220 VARIATION AC

Package drawings are provided as a service to customers considering Fairchild components. Drawings may change in any manner without notice. Please note the revision and/or date on the drawing and contact a Fairchild Semiconductor representative to verify or obtain the most recent revision. Package specifications do not expand the terms of Fairchild's worldwide terms and conditions, specifically the warranty therein, which covers Fairchild products.

Always visit Fairchild Semiconductor's online packaging area for the most recent package drawings:

http://www.fairchildsemi.com/package/packageDetails.html?id=PN_TT220-0B2.

©2001 Fairchild Semiconductor Corporation

Mechanical Dimensions

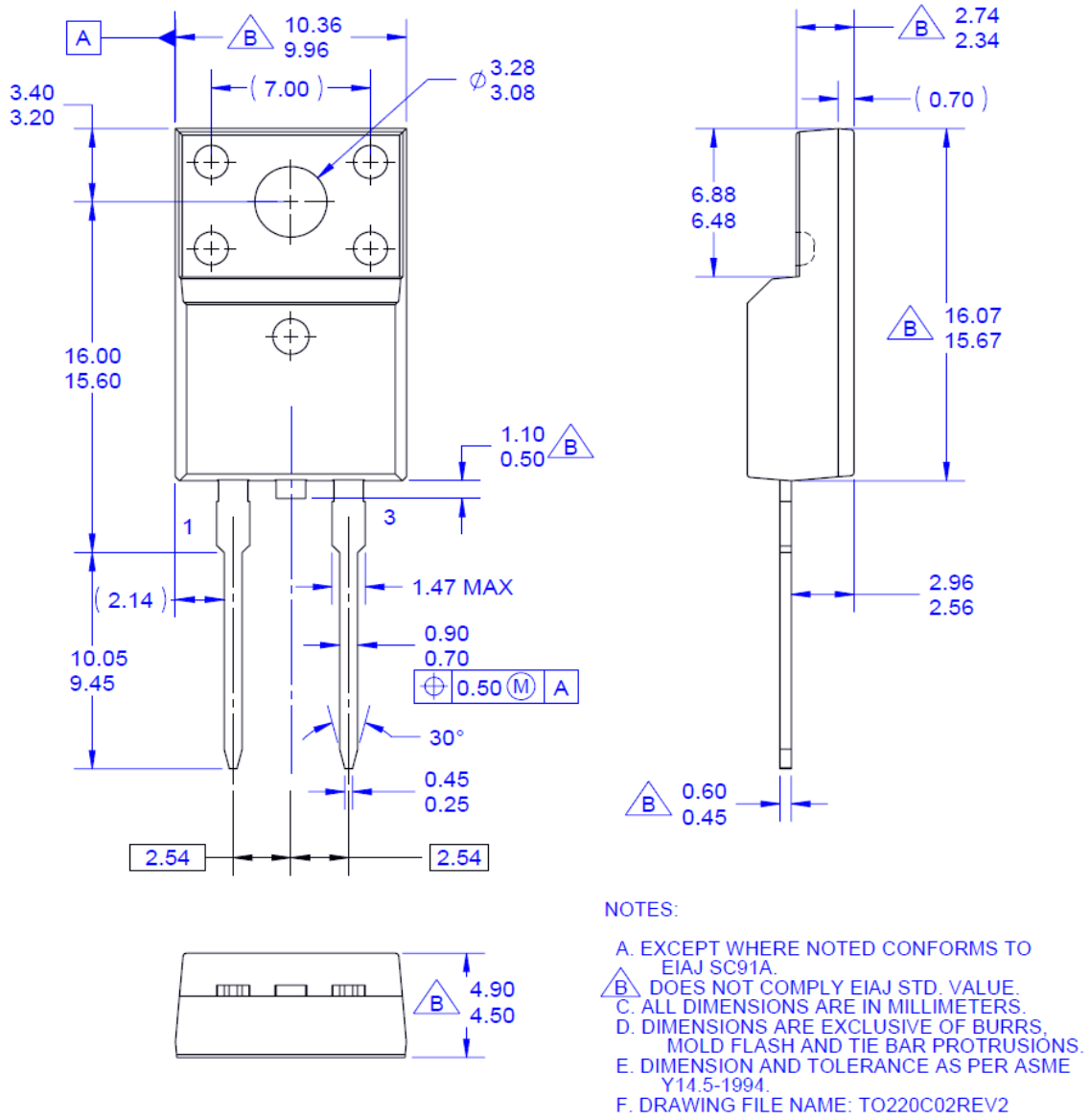

Figure 1 . TO-220F 2L - 2LD; TO220; MOLDED; FULL PACK

Package drawings are provided as a service to customers considering Fairchild components. Drawings may change in any manner without notice. Please note the revision and/or date on the drawing and contact a Fairchild Semiconductor representative to verify or obtain the most recent revision. Package specifications do not expand the terms of Fairchild's worldwide terms and conditions, specifically the warranty therein, which covers Fairchild products.

Always visit Fairchild Semiconductor's online packaging area for the most recent package drawings:

http://www.fairchildsemi.com/package/packageDetails.html?id=PN_TF220-002.

Me i Dimensions

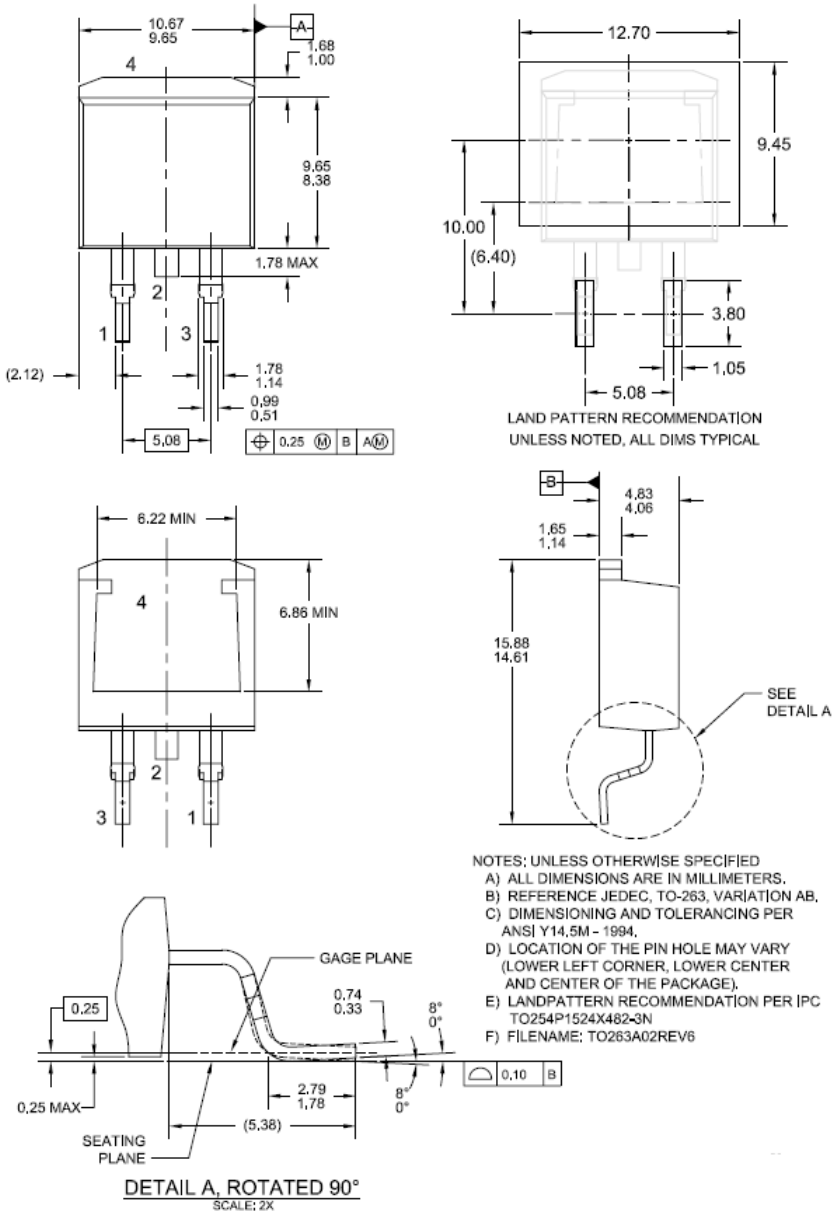

Figure 19. TO-263 2L (D2PAK) - 2LD,TO263, SURFACE MOUNT

Package drawings are provided as a service to customers considering Fairchild components. Drawings may change in any manner without notice. Please note the revision and/or date on the drawing and contact a Fairchild Semiconductor representative to verify or obtain the most recent revision. Package specifications do not expand the terms of Fairchild's worldwide terms and conditions, specifically the warranty therein, which covers Fairchild products.

Always visit Fairchild Semiconductor's online packaging area for the most recent package drawings:

http://www.fairchildsemi.com/package/packageDetails.html?id=PN_TT263-002.

FAIRCHILD SEMICONDUCTOR®

TRADEMARKS

The following includes registered and unregistered trademarks and service marks, owned by Fairchild Semiconductor and/or its global subsidiaries, and is not intended to be an exhaustive list of all such trademarks.

AccuPower™
AX-CAP®*
BitSiC™
Build it Now™
CorePLUS™
CorePOWER™
CROSSVOLT™
CTL™
Current Transfer Logic™
DEUXPEED®
Dual Cool™
EcoSPARK®
EfficentMax™
ESBC™
F®
Fairchild®
Fairchild Semiconductor®
FACT Quiet Series™
FACT®
FAST®
FastvCore™
FETBench™
FPS™
F-PFS™
FRFET®
Global Power Resource^{SM}
GreenBridge™
Green FPS™
Green FPS™ e-Series™
G*max*™
GTO™
IntelliMAX™
ISOPLANAR™
Marking Small Speakers Sound Louder and Better™
MegaBuck™
MICROCOUPLER™
MicroFET™
MicroPak™
MicroPak2™
MillerDrive™
MotionMax™
mWSaver®
OptoHiT™
OPTOLOGIC®
OPTOPLANAR®
®
PowerTrench®
PowerXS™
Programmable Active Droop™
QFET®
QS™
Quiet Series™
RapidConfigure™
™
Saving our world, 1mW/W/kW at a time™
SignalWise™
SmartMax™
SMART START™
Solutions for Your Success™
SPM®
STEALTH™
SuperFET®
SuperSOT™-3
SuperSOT™-6
SuperSOT™-8
SupreMOS®
SyncFET™
Sync-Lock™
SYSTEM GENERAL ®*
TinyBoost®
TinyBuck®
TinyCalc™
TinyLogic®
TINYOPTO™
TinyPower™
TinyPWM™
TinyWire™
TranSiC™
TriFault Detect™
TRUECURRENT®*
µSerDes™
µ SerDes™
UHC®
Ultra FRFET™
UniFET™
VCX™
VisualMax™
VoltagePlus™
XS™

*Trademarks of System General Corporation, used under license by Fairchild Semiconductor.

DISCLAIMER

FAIRCHILD SEMICONDUCTOR RESERVES THE RIGHT TO MAKE CHANGES WITHOUT FURTHER NOTICE TO ANY PRODUCTS HEREIN TO IMPROVE RELIABILITY, FUNCTION, OR DESIGN. FAIRCHILD DOES NOT ASSUME ANY LIABILITY ARISING OUT OF THE APPLICATION OR USE OF ANY PRODUCT OR CIRCUIT DESCRIBED HEREIN; NEITHER DOES IT CONVEY ANY LICENSE UNDER ITS PATENT RIGHTS, NOR THE RIGHTS OF OTHERS. THESE SPECIFICATIONS DO NOT EXPAND THE TERMS OF FAIRCHILD'S WORLDWIDE TERMS AND CONDITIONS, SPECIFICALLY THE WARRANTY THEREIN, WHICH COVERS THESE PRODUCTS.

LIFE SUPPORT POLICY

FAIRCHILD'S PRODUCTS ARE NOT AUTHORIZED FOR USE AS CRITICAL COMPONENTS IN LIFE SUPPORT DEVICES OR SYSTEMS WITHOUT THE EXPRESS WRITTEN APPROVAL OF FAIRCHILD SEMICONDUCTOR CORPORATION.

As used here in:

1. Life support devices or systems are devices or systems which, (a) are intended for surgical implant into the body or (b) support or sustain life, and (c) whose failure to perform when properly used in accordance with instructions for use provided in the labeling, can be reasonably expected to result in a significant injury of the user.
2. A critical component in any component of a life support, device, or system whose failure to perform can be reasonably expected to cause the failure of the life support device or system, or to affect its safety or effectiveness.

ANTI-COUNTERFEITING POLICY

Fairchild Semiconductor Corporation's Anti-Counterfeiting Policy. Fairchild's Anti-Counterfeiting Policy is also stated on our external website, www.Fairchildsemi.com, under Sales Support.

Counterfeiting of semiconductor parts is a growing problem in the industry. All manufactures of semiconductor products are experiencing counterfeiting of their parts. Customers who inadvertently purchase counterfeit parts experience many problems such as loss of brand reputation, substandard performance, failed application, and increased cost of production and manufacturing delays. Fairchild is taking strong measures to protect ourselves and our customers from the proliferation of counterfeit parts. Fairchild strongly encourages customers to purchase Fairchild parts either directly from Fairchild or from Authorized Fairchild Distributors who are listed by country on our web page cited above. Products customers buy either from Fairchild directly or from Authorized Fairchild Distributors are genuine parts, have full traceability, meet Fairchild's quality standards for handing and storage and provide access to Fairchild's full range of up-to-date technical and product information. Fairchild and our Authorized Distributors will stand behind all warranties and will appropriately address and warranty issues that may arise. Fairchild will not provide any warranty coverage or other assistance for parts bought from Unauthorized Sources. Fairchild is committed to combat this global problem and encourage our customers to do their part in stopping this practice by buying direct or from authorized distributors.

PRODUCT STATUS DEFINITIONS
Definition of Terms

Datasheet Identification	Product Status	Definition
Advance Information	Formative / In Design	Datasheet contains the design specifications for product development. Specifications may change in any manner without notice.
Preliminary	First Production	Datasheet contains preliminary data; supplementary data will be published at a later date. Fairchild Semiconductor reserves the right to make changes at any time without notice to improve design.
No Identification Needed	Full Production	Datasheet contains final specifications. Fairchild Semiconductor reserves the right to make changes at any time without notice to improve the design.
Obsolete	Not In Production	Datasheet contains specifications on a product that is discontinued by Fairchild Semiconductor. The datasheet is for reference information only.

Rev. I66

ON Semiconductor and ON are trademarks of Semiconductor Components Industries, LLC dba ON Semiconductor or its subsidiaries in the United States and/or other countries. ON Semiconductor owns the rights to a number of patents, trademarks, copyrights, trade secrets, and other intellectual property. A listing of ON Semiconductor's product/patent coverage may be accessed at www.onsemi.com/site/pdf/Patent−Marking.pdf. ON Semiconductor reserves the right to make changes without further notice to any products herein. ON Semiconductor makes no warranty, representation or guarantee regarding the suitability of its products for any particular purpose, nor does ON Semiconductor assume any liability arising out of the application or use of any product or circuit, and specifically disclaims any and all liability, including without limitation special, consequential or incidental damages. Buyer is responsible for its products and applications using ON Semiconductor products, including compliance with all laws, regulations and safety requirements or standards, regardless of any support or applications information provided by ON Semiconductor. "Typical" parameters which may be provided in ON Semiconductor data sheets and/or specifications can and do vary in different applications and actual performance may vary over time. All operating parameters, including "Typicals" must be validated for each customer application by customer's technical experts. ON Semiconductor does not convey any license under its patent rights nor the rights of others. ON Semiconductor products are not designed, intended, or authorized for use as a critical component in life support systems or any FDA Class 3 medical devices or medical devices with a same or similar classification in a foreign jurisdiction or any devices intended for implantation in the human body. Should Buyer purchase or use ON Semiconductor products for any such unintended or unauthorized application, Buyer shall indemnify and hold ON Semiconductor and its officers, employees, subsidiaries, affiliates, and distributors harmless against all claims, costs, damages, and expenses, and reasonable attorney fees arising out of, directly or indirectly, any claim of personal injury or death associated with such unintended or unauthorized use, even if such claim alleges that ON Semiconductor was negligent regarding the design or manufacture of the part. ON Semiconductor is an Equal Opportunity/Affirmative Action Employer. This literature is subject to all applicable copyright laws and is not for resale in any manner.

PUBLICATION ORDERING INFORMATION

LITERATURE FULFILLMENT:
Literature Distribution Center for ON Semiconductor
19521 E. 32nd Pkwy, Aurora, Colorado 80011 USA
Phone: 303−675−2175 or 800−344−3860 Toll Free USA/Canada
Fax: 303−675−2176 or 800−344−3867 Toll Free USA/Canada
Email: orderlit@onsemi.com

N. American Technical Support: 800−282−9855 Toll Free USA/Canada
Europe, Middle East and Africa Technical Support:
Phone: 421 33 790 2910
Japan Customer Focus Center
Phone: 81−3−5817−1050

ON Semiconductor Website: **www.onsemi.com**

Order Literature: http://www.onsemi.com/orderlit

For additional information, please contact your local Sales Representative