Data Sheet | September 2, 2005 | FN8039.2

Pre-Distortion Linearizer

The ISL5239 Pre-Distortion Linearizer (PDL) is a full featured component for Power Amplifier (PA) linearization to improve PA power efficiency and reduce PA cost.

The Radio Frequency (RF) PA is one of the most expensive and power-consuming devices in any wireless communication system. The ideal RF PA would have an entirely linear relationship between input and output, expressed as a simple gain which applies at all power levels. Unfortunately, realizable RF amplifiers are not completely linear and the use of pre-distortion techniques allows the substitution of lower cost/power PA's for higher cost/power PA's.

The ISL5239 pre-distortion linearizer enables the linearization of less expensive PA's to provide more efficient operation closer to saturation. This provides the benefit of improved linearity and efficiency, while reducing PA cost and operational expense.

The ISL5239 features a 125MHz pre-distortion bandwidth capable of full 5th order intermodulation correction for signal bandwidths up to 20MHz. This bandwidth is particularly well suited for 3G cellular deployments of UMTS and CDMA2000. The device also corrects for PA memory effects that limit pre-distortion performance including self heating.

The ISL5239 combines an input formatter and interpolator, pre-distortion linearizer, an IF converter, correction filter, gain/phase/offset adjustment, output formatter, and input and feedback capture memories into a single chip controlled by a 16-bit linearizer interface.

The ISL5239 supports log of power, linear magnitude, and linear power based pre-distortion, utilizing two Look-Up Table (LUT) based algorithms for the pre-distortion correction. The device provides programmable scaling and offset correction, and provides for phase imbalance adjustment.

Features

- Output Sample Rates Up to 125MSPS
- Full 20MHz Signal Bandwidth
- Dynamic Memory Effects Compensation
- Input and Feedback Capture Memories
- LUT-based Digital Pre-distortion
- Two 18-bit Output Busses with Programmable Bit-Width
- 16-Bit Parallel μProcessor Interface
- Input Interpolator x2, x4, x8
- Programmable Frequency Response Correction
- Low Power Architecture
- Threshold Comparator for Internal Triggering
- Quadrature or Digital IF Architecture
- Lowest-Cost Full-Featured Part Available
- Pb-Free Plus Anneal Available (RoHS Compliant)

Applications

- Base Station Power Amplifier Linearization
- Operates with ISL5217 in Software Radio Solutions
- Compatible with the ISL5961 or ISL5929 D/A Converters

Ordering Information

PART NUMBER	PART MARKING	TEMP RANGE (^{O}C)	PACKAGE	PKG. DWG. #
ISL5239KI	ISL5239KI	-40 to 85	196 Ld BGA	V196.15x15
ISL5239KIZ (Note)	ISL5239KIZ	-40 to 85	196 Ld BGA (Pb-free)	V196.15x15
ISL5239EVAL1		25	Evaluation Kit	

NOTE: Intersil Pb-free plus anneal products employ special Pb-free material sets; molding compounds/die attach materials and 100% matte tin plate termination finish, which are RoHS compliant and compatible with both SnPb and Pb-free soldering operations. Intersil Pb-free products are MSL classified at Pb-free peak reflow temperatures that meet or exceed the Pb-free requirements of IPC/JEDEC J STD-020.

CAUTION: These devices are sensitive to electrostatic discharge; follow proper IC Handling Procedures.
1-888-INTERSIL or 1-888-468-3774 | Intersil (and design) is a registered trademark of Intersil Americas Inc.
Copyright Intersil Americas Inc. 2002, 2005. All Rights Reserved
All other trademarks mentioned are the property of their respective owners.

Block Diagram

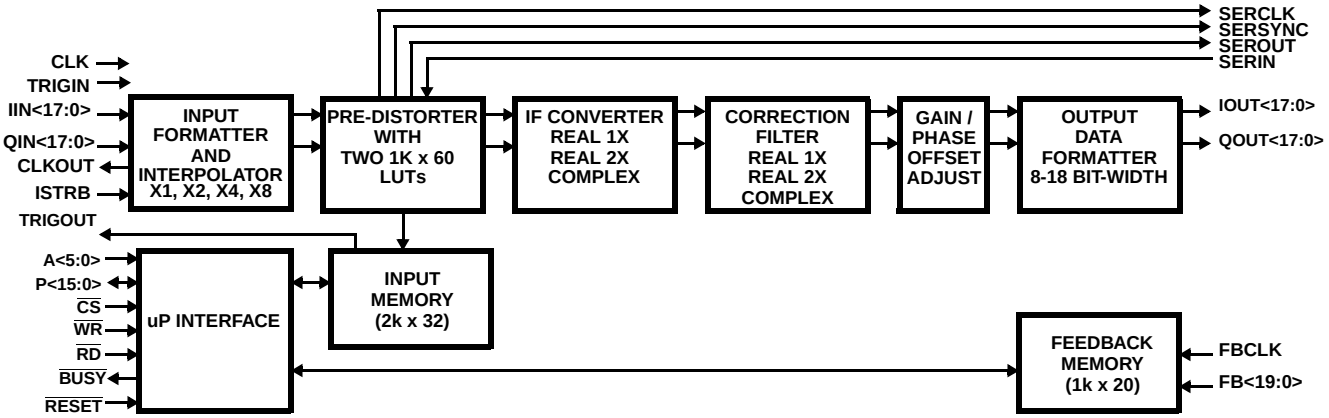

Functional Block Diagram

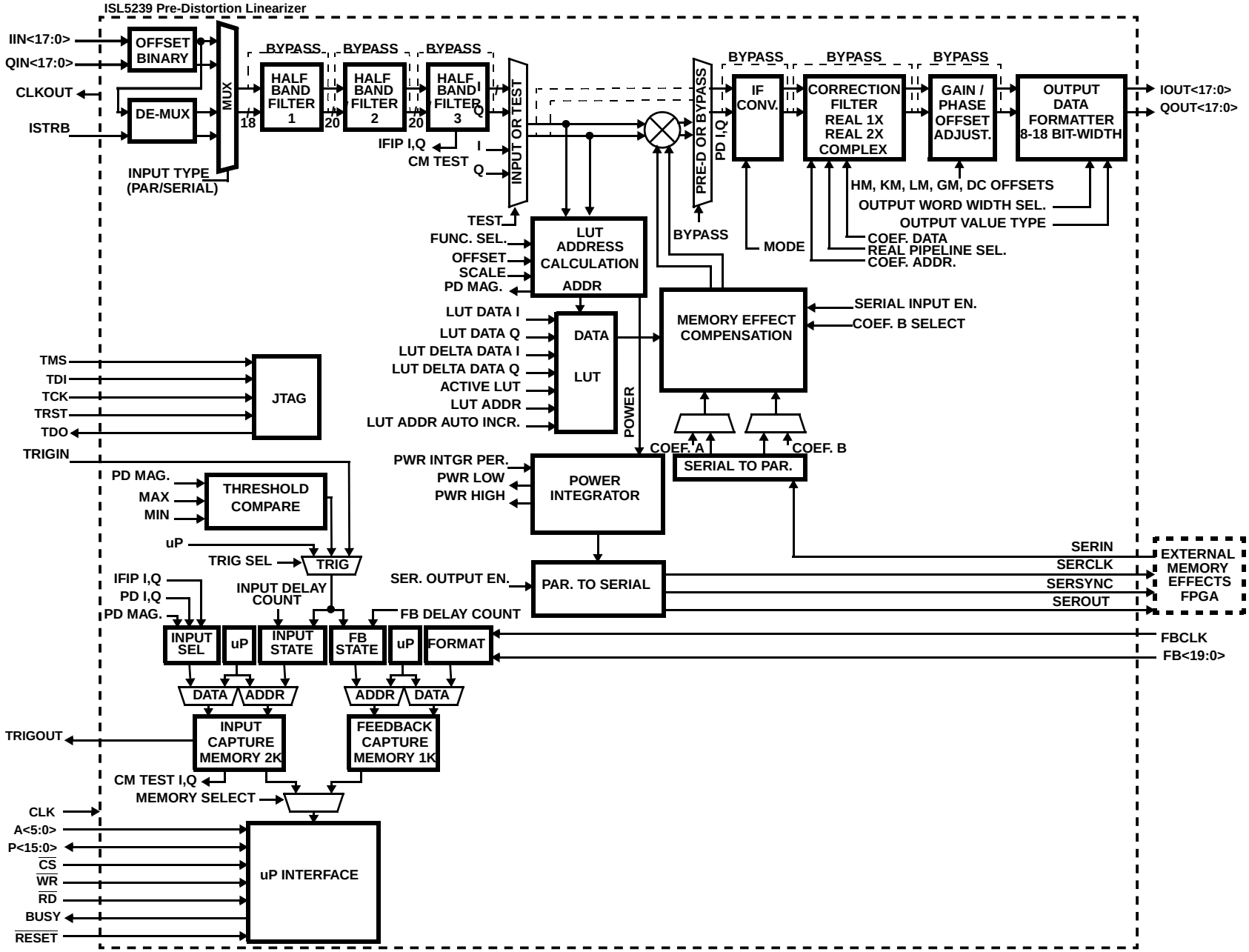

Pinout

196 CABGA
TOP VIEW

	1	2	3	4	5	6	7	8	9	10	11	12	13	14
A	NC	VCCC	IIN16	IIN12	IIN9	IIN4	IIN0	QOUT15	GND	QOUT11	GND	VCCIO	VCCC	NC
B	ISTRB	NC	IIN17	IIN14	VCCC	IIN7	IIN3	VCCIO	VCCIO	QOUT9	QOUT6	QOUT4	NC	GND
C	A3	A0	A2	IIN15	IIN11	IIN8	IIN2	QOUT16	QOUT12	VCCC	QOUT7	QOUT1	QOUT3	QOUT0
D	$\overline{CS}$	A1	A5	IIN13	IIN10	IIN6	IIN1	QOUT17	QOUT13	QOUT8	QOUT2	VCCIO	QOUT5	FB17
E	P0	VCCC	$\overline{RD}$	A4	$\overline{WR}$	IIN5	GND	VCCC	QOUT14	QOUT10	FB14	FB19	FB18	VCCC
F	VCCIO	P1	P2	P3	P4					FB13	FB16	FB15	GND	FB10
G	P7	P6	P5	GND	P11					SEROUT	FB9	FB12	FB11	SERIN
H	P10	P12	VCCIO	P8	P9					SERSYNC	GND	VCCIO	SERCLK	CLKOUT
J	CLK	GND	$\overline{RESET}$	P14	P15					TRIGOUT	FB7	FB6	FB5	FB8
K	P13	TDO	TCK	$\overline{BUSY}$	QIN6	QIN0	VCCC	GND	IOUT11	GND	FB0	VCCC	FB3	FB4
L	DCTEST	TDI	TMS	QIN17	QIN9	QIN2	VCCIO	IOUT13	IOUT9	VCCC	IOUT4	FB1	TRIGIN	FB2
M	QIN16	QIN15	QIN13	QIN11	QIN7	QIN4	IOUT16	GND	IOUT7	VCCIO	IOUT3	IOUT0	IOUT2	FBCLK
N	TRST	NC	QIN14	QIN10	VCCC	QIN3	IOUT17	IIOUT12	IOUT10	IOUT8	GND	VCCIO	NC	IOUT1
P	NC	VCCC	QIN12	QIN8	QIN5	QIN1	IOUT15	IOUT14	VCCIO	GND	IOUT6	IOUT5	VCCC	NC

POWER PIN *SIGNAL PIN*
GROUND PIN *THERMAL BALL* *NC (Do not connect)*

Pin Descriptions

NAME	TYPE	DESCRIPTION
POWER SUPPLY		
VCCC	-	Positive Device Core Power Supply Voltage, 1.8V ±0.18V.
VCCIO	-	Positive Device Input/Output Power Supply Voltage, 3.3V ±0.165V.
GND	-	Common Ground, 0V
MICROPROCESSOR INTERFACE AND CONTROL		
CLK	I	Input Clock. Rising edge drives all of the devices synchronous operations, except feedback capture.
$\overline{RESET}$	I	Reset. (Active Low). Asserting reset will clear all configuration registers to their default values, reset all internal states, and halt all processing.
P<15:0>	I/O	16-bit bi-directional data bus that operates with A<5:0>, $\overline{CS}$, $\overline{RD}$, and $\overline{WR}$ to write to and read from the devices internal control registers. When the host system asserts $\overline{CS}$ and $\overline{RD}$ simultaneously, P<15:0> is an output bus, under all other conditions, it is an input bus. Bit 15 is the MSB.

Pin Descriptions (Continued)

NAME	TYPE	DESCRIPTION
A<5:0>	I	6-bit address bus that operates with P<15:0>, $\overline{CS}$, $\overline{RD}$, and $\overline{WR}$ to write to and read from the devices internal control registers. Bit 5 is the MSB.
$\overline{CS}$	I	Chip Select. (active low). Enables device to respond to µP access by enabling read or write operations.
$\overline{WR}$	I	Write Strobe, (active low). The data on P<15:0> is written to the destination selected by A<5:0> on the rising edge of $\overline{WR}$ when $\overline{CS}$ is asserted (low).
$\overline{RD}$	I	Read Strobe (Active Low). The data at the address selected by A(5:0) is placed on P<15:0> when $\overline{RD}$ is asserted (low) and $\overline{CS}$ is asserted (low).
$\overline{BUSY}$	O	µP Busy. (Active Low) Indicates that the µP interface is busy. The device asserts BUSY during a read operation to indicate that the output data on P<15:0> is not ready, and it asserts this signal during a write operation to indicate that it is not available for another read or write operation yet.
EXTERNAL SERIAL INTERFACE		
SERCLK	O	Serial Clock. Clock signal provided to external device for serial input and output, derived from rising edge of CLK.
SERSYNC	O	Serial Sync. Active high single-cycle pulse that is time coincident with the first sample of the 32-bit serial data frame. Derived from by rising edge of CLK.
SEROUT	O	Serial Output. Output data bit for the serial interface. Derived from the rising edge of CLK.
SERIN	I	Serial Input.Input data bit for serial interface. Derived from rising edge of CLK.
FEEDBACK INTERFACE		
FB<19:0>	I	Feedback Input Data. Parallel or serial data to be stored in the feedback memory. In parallel mode, all 20-bits are stored on the rising edge of FBCLK. In serial mode, bit 0 is serial input data and bit 1 is serial sync, sampled at the rising edge of FBCLK.
FBCLK	I	Input clock used for sampling the FB<19:0> pins.
TRIGGER INTERFACE		
TRIGIN	I	Trigger input. Hardwired trigger source to be used to trigger an input/feedback capture. Sampled internally with rising edge of CLK.
TRIGOUT	O	Trigger output. Indicated that the capture system has been triggered, either internally or externally.
DATA INPUT		
IIN<17:0>	I	I input data. Real component of the complex input sample when input format is parallel. Alternating real and imaginary when input format is muxed. Selectable as 2's complement or offset binary.
QIN<17:0>	I	Q input data. Imaginary component of the complex input sample when input format is parallel. Unused in serial input format.
ISTRB	I	I data strobe. (active high). Used in the muxed input format. When asserted, the input data buses contains valid I data.
CLKOUT	O	Input data clock. Output clock for the data source driving the IIN<17:0> and QIN<17:0> inputs. Input data busses sampled on the rising edge of CLK that generates the rising edge of CLKOUT.
DATA OUTPUT		
IOUT<17:0>	I	I output data. Real component of the complex output sample driven by the rising edge of CLK. Selectable as 2's complement or offset binary.
QOUT<17:0>	I	Q output data. IMaginary component of the complex output sample driven by the rising edge of CLK. Selectable as 2's complement or offset binary.
TEST ACCESS		
DCTEST	O	DC tree output. NAND tree output for DC threshold test. Do not connect for normal operation.
JTAG TEST ACCESS PORT		
TMS	I	JTAG Test Mode Select. Internally pulled up.
TDI	I	JTAG Test Data In. Internally pulled up.
TCK	I	JTAG Test Clock.
TRST	I	JTAG Test Reset (Active Low). Internally pulled-up.
TDO	O	JTAG Test Data Out.

Functional Description

The ISL5239 is a full-featured digital pre-distortion part featuring a high-performance lookup-table based pre-distortion (PD) processing unit. It includes an interpolator for upsampling and supports all varieties of upconversion architectures with a programmable correction filter for equalization including both sin(x)/x correction and removal of frequency response imbalance between quadrature paths. It also features gain, phase, and offset compensation for direct upconversion, digital IF output for heterodyning, and input/output capture memories with internal/external triggering capabilities to facilitate closedloop feedback processing. System implementation is typically as shown in Figure 1. Although the power detect feedback is shown with one Analog to Digital Converter (ADC), coherently demodulated feedback signalsLO configurations with 1 or 2 ADC's are also supported.

The block diagram on page 1 shows the internal functional units within the ISL5239. In the following sections each functional unit is described. The operation of the ISL5239 is controlled by the register map listed in Table 3. Detailed descriptions for each control/status register are given in Tables 4 through 48. The control/status registers are referred to in the discussion below.

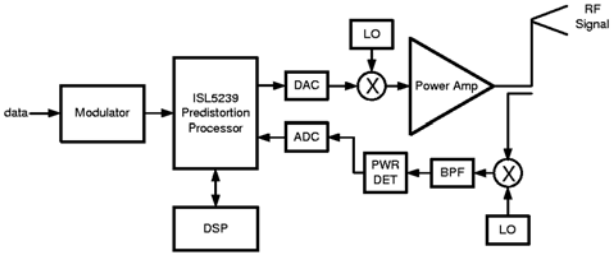

FIGURE 1. SYSTEM OVERVIEW

Input Formatter and Interpolator (IFIP)

The Input Formatter and Interpolator interfaces to the data source to provide for parallel data input via the IIN<17:0>, QIN<17:0> busses, or serial input via the IIN<17:0> input bus. In parallel input mode, both 18-bit input busses are used to allow for parallel I and Q sample loading. In serial mode, the data is input via the IIN<17:0> bus only, as the I sample followed by the Q sample with the ISTRB input asserted with each I sample. In this mode, the QIN<17:0> bus is not utilized. The input data format is selectable as either two's complement or offset binary.

The Interpolator function is necessary because pre-distorting a signal results in a much wider bandwidth signal (typically 5x to 7x wider). The Input Formatter and Interpolator is depicted in Figure 2.

Three interpolation rates (x2, x4, and x8) are supported by the cascade of three Half-Band (HB) Filters. The ISL5239 includes an on-chip clock divider to facilitate input clocking.

The clock divider generates the CLKOUT signal which is used to clock data from the input signal source. Typical input sources include the ISL5217 quad programmable upconverter, which is designed to operate seamlessly with the ISL5239.

The interpolation factor is selectable in control word 0x02, bits 6:4 as x1, x2, x4, and x8. The x1 mode bypasses all three half-band filters. The x2 mode utilized HB1 and bypasses HB2 and HB3. The x4 mode utilized HB1 and HB2 and bypasses HB3. Finally, the x8 mode utilizes all three HBFs. Saturation status bits are provided for each of the three HBFs in the status register 0x03.

Input data rates up to the CLK rate are supported, based on the requirement CLK >= Fs * IP, where Fs is the input rate of the incoming data and IP is the interpolation factor selected in control word 0x02.

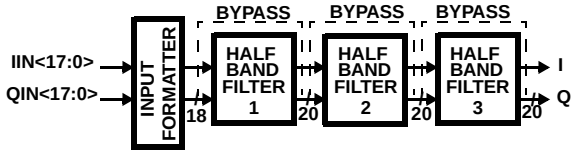

FIGURE 2. INPUT FORMATTER AND INTERPOLATOR BLOCK DIAGRAM

Each half-band filter performs a x2 interpolation by inserting one zero between each input data sample, causing the sampling frequency to double. The resulting zero-stuffed data is then low pass filtered to reject the upsampling image.

The half-band filter frequency responses are as shown in Figure 3.

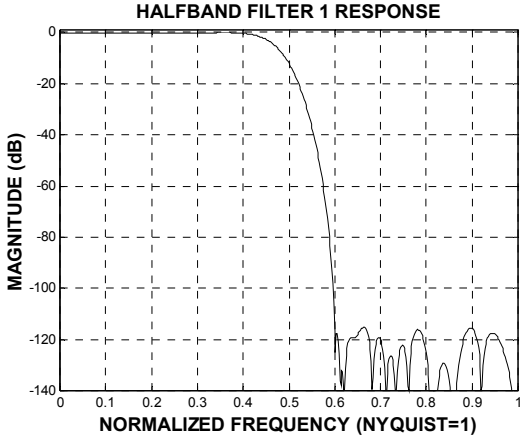

FIGURE 3. x2, HB1 ENABLED FREQUENCY RESPONSE

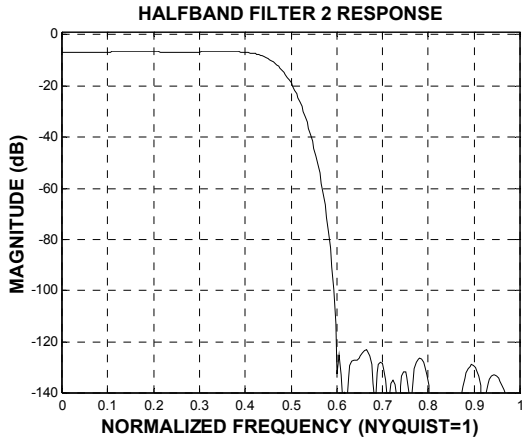

FIGURE 3A. X4, HB1 AND HB2 ENABLED FREQUENCY RESPONSE

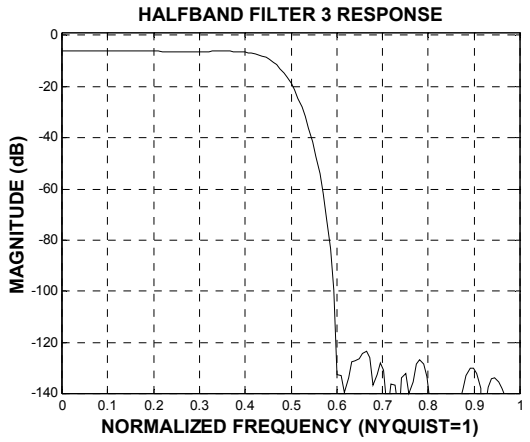

FIGURE 3B. X8, HB1-HB3 ENABLED FREQUENCY RESPONSE

Pre-Distorter (PD)

The function of the Pre-distorter is to compute the magnitude of the input signal, look up a complex distortion vector based on the magnitude, and apply that distortion to the input signal.

The signal magnitude may be computed by any of three different methods: log of power, linear magnitude or linear power. The result is scaled and offset by programmable amounts and becomes the address into a Look-up Table (LUT).

Two LUTs are available, one of which is ‘live’ in the circuit and the other is offline and can be loaded via the processor interface. This configuration allows instantaneous switching of pre-distortion characteristics without unpredictable effects on the processed signal.

The LUTs contain a complex distortion vector, as well as complex delta values which interact with an external Thermal/Memory calculation circuit to predict the effects of temperature changes on the RF amplifier’s behavior and compensate. The average power into the amplifier is computed and transmitted serially off chip. The external circuits compute one or two memory effect coefficients which are combined with the complex delta values in the LUT to derive the final distortion vector. The distortion vector is a rectangular complex value which is multiplied with the input signal resulting in a magnitude based non-linearity. Access to the LUT is optimized by the use of an auto incrementing address register which allows the tables to be updated with only one address register write operation. Control words 0x10 through 0x1d apply to the

pre-distorter. The pre-distorter block diagram is shown in Figure 4.

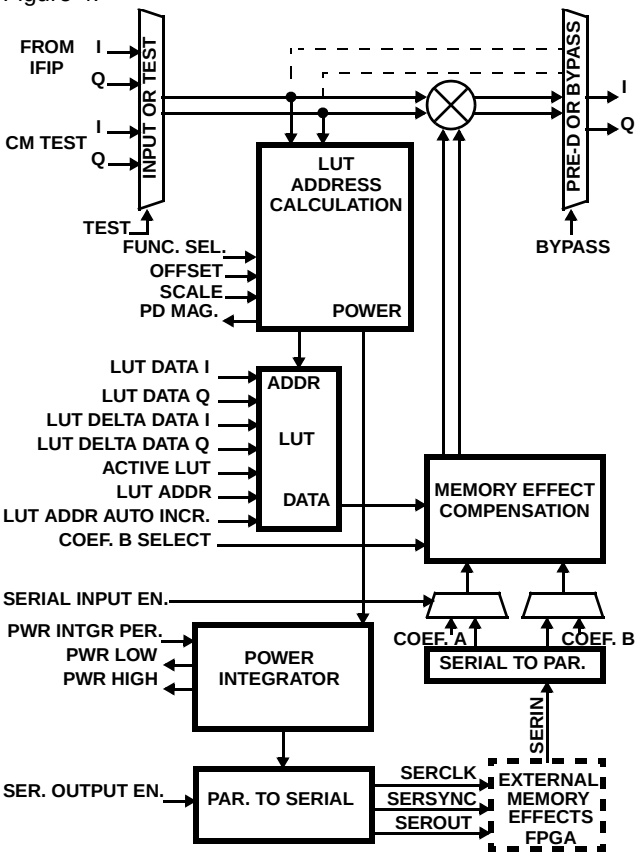

FIGURE 4. PRE-DISTORTER BLOCK DIAGRAM

Serial Interface

The serial interface for the external memory effects calculation consists of outputs SERCLK, SERSYNC, and SEROUT and input SERIN. The serial output sends the 32-bit unsigned average power off-chip for further processing. The data is transmitted via the SEROUT pin MSB first, with the first bit marked by a high pulse on the SERSYNC pin. The SERCLK rate is scaled such that 32 bits are transmitted in one period of the power integrator as controlled by register 0x18 bits 5:4. SEROUT is enabled by register 0x18 bit 12.

The SERIN receives the thermal compensation parameters from external processing using the same SERCLK and SERSYNC used by the SEROUT. The chip expects to receive 32 bits of data sequentially on the SERIN pin: the MSB of A, followed by the rest of A, then the MSB of B, followed by the rest of B. The SERIN is enabled by register 0x18 bit 8. When SERIN is disabled, registers 0x19 and 0x1a supply the A and B parameters for the thermal compensation calculations. See Figure 16 for a detailed timing diagram of the serial interface.

IF Converter (IFC)

The output of the pre-distorter is a complex baseband signal sampled at the system CLK rate. To provide greater system flexibility, the IF Converter function can change this in one of three different ways, providing frequency shifts, sample rate changes and complex to real conversions.

Real 1X

The real 1x operating mode shifts the signal up by Fs/4 and performs a complex to real conversion without changing the base sample rate. This mode has 1/2 the bandwidth of the original input signal, with the I output channel active and the Q output channel set to 0. The operation of the IF converter in this mode is shown in Figure 5.

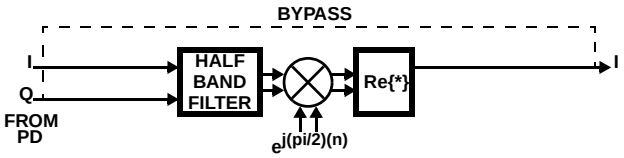

FIGURE 5. IF CONVERTER IN REAL 1X MODE OPERATION

Real 2X

The real 2x operating mode converts complex to real at 2x the sample rate and shifts the signal up to Fs/2 (Fs/4 of the output rate). This mode has the same bandwidth as the original signal with the I channel carrying the first of twwo samples/clock and the Q channel carrying the second sample. The operation of the IF Converter in this mode is shown in Figure 6.

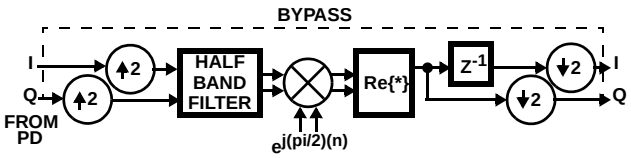

FIGURE 6. IF CONVERTER IN REAL 2X MODE OPERATION

The IF converter frequency response is as shown in Figure 7, with the folding effect shown in Figure 7A for the x2, Fs/4 upconverter case.

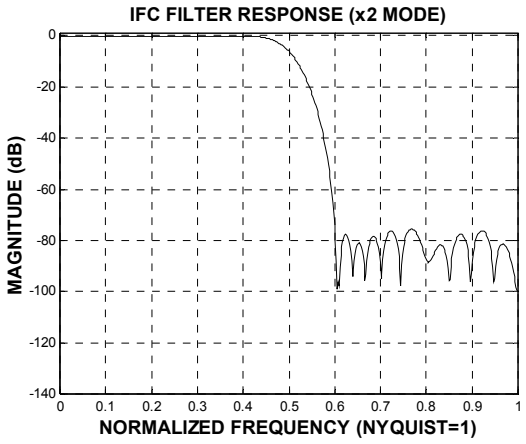

FIGURE 7. x2, IFC FREQUENCY RESPONSE

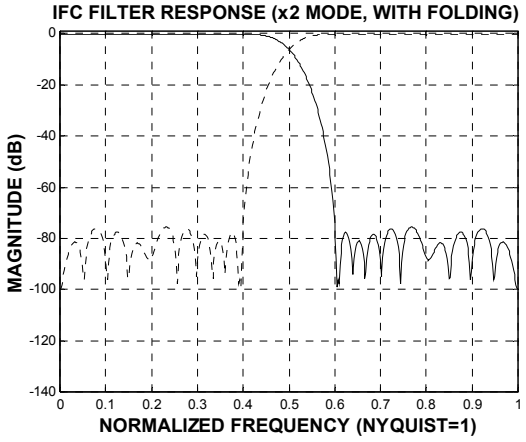

FIGURE 7A. x2, IFC FREQUENCY RESP. WITH FOLDING

Complex

The complex operating mode simply shifts the complex baseband signal up by Fs/4 without any filtering or real conversion. The operation of the IF converter in this mode is shown in Figure 8.

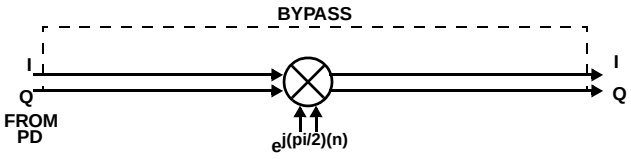

FIGURE 8. IF CONVERTER IN COMPLEX MODE OPERATION

Correction Filter (CF)

To compensate for imperfections in the analog filtering which takes place after D/A conversion, the correction filter provides an independent 13-tap FIR filter on each channel. These filters may be programmed to remove differential group delay and ripple characteristics of external analog circuits including sin(x)/x correction and frequency response imbalance between the I and Q channels using either amplitude or group delay. This allows for correction of the two physically separate I and Q analog response paths from the DAC's through the quadrature up-converter. It also provides correction of the bandpass response when operating in a complex frequency shifted IF mode. There are two possible correction filter modes.

Real 2X

When the IF Converter is set to generate 2x sampled real data, the Correction Filter must be reconfigured to process this data correctly. In this mode it effectively provides one 13-tap block-mode filter when the coefficients for the two filters are programmed identically.

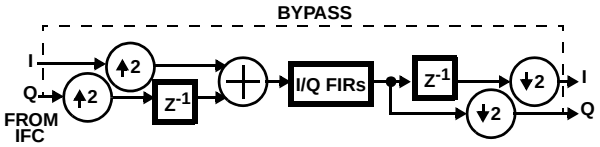

FIGURE 9. CORRECTION FILTER IN REAL 2X MODE

Complex or Real 1x

When configured for operation in the complex mode, one 13-tap filter is provided for each the I and Q channels. In Real 1x mode, the Q channel is not used.

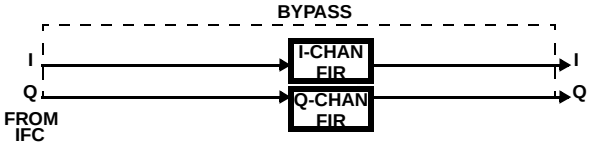

FIGURE 10. CORRECTION FILTER IN COMPLEX MODE

Output Data Conditioner (ODC)

The Output Data Conditioner can apply I/Q balance corrections, DC offset corrections and output format conversions.

To compensate for gain/phase imperfections in external analog modulation circuits which can result in poor image rejection and reduced dynamic range, the ODC provides an I/Q balance corrector. The I/Q balance corrector provides four coefficients to control the magnitude of the direct and

cross-coupled term on both the I and Q channels. Typical implementation is as shown in Figure 10.

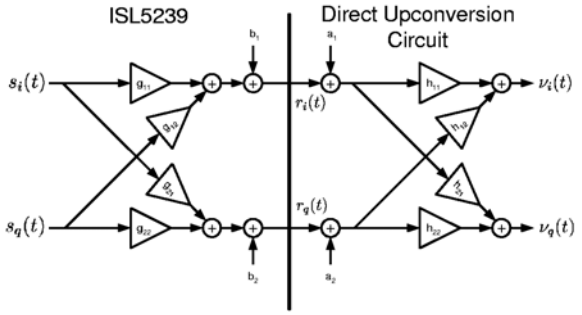

FIGURE 11. IMBALANCE CORRECTION

The Output formatter also provides DC offset correction to 1/4 LSB for 18-bit outputs to reduce analog DC offsets introduced in external D/A conversion and modulation circuits which can degrade system performance by causing carrier feed through in complex baseband systems, or spurs at DC for IF systems.

The ODC also provides programmable output precision 8 to 18-bits, with unbiased (convergent) rounding, since practical system designs will require D/A converters with fewer than 18-bits. Internal accuracy is in excess of 18-bits, and utilizes 20-bit data paths in critical areas. Additionally, both two's complement and offset binary formats are supported.

Capture Memory (CM)

The Capture Memory allows the capture and viewing of data from various points in the chip. The primary function is to capture the digital signals coming into the pre-distorter. The CM also provides a secondary mode, as it can provide stimulus directly to the pre-Distorter. The CM is comprised of both the Input and the Feedback Memories. The processor interface provides the access to view, input, and alter the memory data. Synchronized (triggered) capture of both input and feedback signals is a typical requirement of adaptive digital pre-distortion systems.

Input Memory

The input capture memory observes the signals going into the amplifier. The 2K deep memory grabs complex samples of data at one of three possible locations, either at the input to the pre-distorter, the output of the pre-distorter, or from its magnitude calculation. In addition to capturing input data, this memory may also be configured as a data source. The input capture memory may be pre-loaded with user defined data and 'played' into the pre-distorter to stimulate the system with signals that will elicit a desired response.

Feedback Memory

The feedback memory allows the user to capture data from an external system and to view the memory through the processor interface. The feedback memory is used to observe the signals coming out of the amplifier. The 1K deep memory grabs 20-bit data, either in parallel or serial format. The feedback capture memory has its own clock input, FBCLK, which must be synchronously derived from CLK and meet the timing requirements.

Capture operations may be triggered by an external signal (TRIGIN), by magnitude threshold crossings detection programmed in the magnitude threshold maximum and minimum values, or by system software writing to the processor trigger bit in control word 0x04, bit 6. Separate programmable delays of up to 32k samples are provided for both input memory and feedback capture, allowing system delays to be calibrated out for optimum alignment prior to analysis. A TRIGOUT output is provided to indicates when a capture operation has begun.

The processor interface to the capture memories is designed to minimize the time required for loading/unloading. Although access to the memories takes place through indirect address and data registers, auto incrementing of the address is supported so the address only needs to be written once to access the entire memory. The capture memory is as shown in Figure 13.

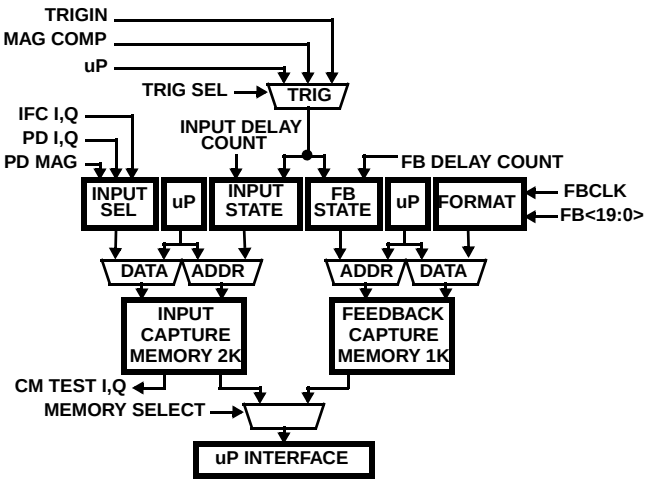

FIGURE 12. CAPTURE MEMORY BLOCK DIAGRAM

Memory Modes and Programming Instructions

Unless noted, the following discussion applies to both the input memory and feedback memory operations. Prior to invoking the memory to capture or send data, the control word 0x06, bits 14:0 input trigger delay counter, 0x08 bits 14:0 feedback trigger delay count, 0x05, bits 10:0 input length, 0x04, bits 2:1 input memory datain source or 0x04, bit 8 feedback input format, and 0x04, bits 5:4 trigger select registers must be loaded.

For the input data, the 0x04, bit 3 input data round bit must also be selected and the feedback memory length count is always set to 1024. To invoke memory operation, the 0x07, bit 4 feedback memory mode or bits 1:0 input memory mode and 0x04, bit 6 processor trigger must be controlled.

There are three modes of operation — capture, loop, and single-shot. The feedback memory does not have a loop mode. A synopsis of the three modes is described below.

Capture Mode

There are two types of capture mode — advanced trigger and single/capture. The advanced trigger mode allows data to be captured around a trigger point, and the quantity of the data captured after the trigger point is set by 0x06, bits 14:0. When input memory capture mode = DELAY, the delay register acts as a delay count prior to the capture or sending of data. The max delay in this case is 32768 counts or system clock ticks. The advanced trigger mode is used in capture mode only. With the feedback capture operations being analogous to the input memory, one feedback memory exception is its control register 0x08, bits 14:0. It has 10 LSBs of available capture space.

Advanced Trigger Capture Mode Sequence

The control register 0x0e, bit 13:12 input capture status, should be in IDLE. Set 0x06, bit 15, input memory capture mode to ADVANCE to signify an advanced trigger capture.

0x06, bits 14:0 set the input trigger delay counter to = 0x56 signifies there are 86 points captured after the occurrence of the trigger point, 0x0e, bit 10:0, input trigger position and all other points are captured prior to trigger point. Note: only the 11 lsbs are valid for the delay capture in this mode. The input trigger position is a read-only register and adding to it the 11 lsbs of the input trigger delay counter determines the position of the final data point captured after the trigger. If the input trigger position is 0x1ff, the final point captured occurred at address: 0x1ff + 0x56 = 0x255 or 597 (decimal). The user must set the input trigger delay counter prior to invoking the transaction of the capture.

The user invokes the capture mode register by writing CAPTURE to 0x07, bit 1:0 input memory mode. The system is in the advanced trigger capture mode and 0x0e, bits 13:12, input capture status is ARMED. The system waits for a trigger as the memory is continuously being written into. When a trigger occurs, the trigger causes the memory to load the data till the memory address is equal to input trigger position + 11 lsbs of the input trigger delay counter. The memory address that is time coincident with the trigger occurrence latches to the input trigger position. During this period, the input capture status is LOADING. When the final capture point loads, the input capture status returns to IDLE and a new capture transaction can be initiated by writing CAPTURE to the input memory mode.

Single/Capture Mode

The sequence for the single shot stimulus mode, input memory mode = SINGLE, and input memory capture mode = CAPTURE with input capture mode = DELAY are the identical. The function of the memory reading or writing provides the difference between the two modes. In the single shot case, the capture memories read data to the output bus, and in the capture mode, they write data to the memories. The sequence of operation in the Single/Capture mode is described below.

The input capture status should be in IDLE and the input memory capture mode in DELAY with the input memory delay counter set to 0x0056. Note: The 15 LSBs of the input memory delay counter are valid for the delay count in this mode. After the trigger, Ox56 signifies there are 86 counts of delay before the start of the capture/send of data to/from the memory.

The user invokes the capture mode by writing the input memory mode to CAPTURE. The system is in the capture mode and the input memory status is ARMED. The system waits for a trigger and the memory is idle at this point. When a trigger occurs, the trigger causes the delay counters to count 86 clocks of delay. At the end of the delay, the memories begin their writing sequence until input memory length data points are written. During the writing of data, the input memory status is LOADING. When the final input memory length point is written, the input memory status returns to IDLE and a new capture transaction can be initiated by writing CAPTURE to the input memory mode.

For the Single Capture mode, the deviations from the sequence are the writing of the input memory mode to SINGLE, and the input memory status to SEND when reading of the data from memory. All other operations are analogous.

Loop Mode

This is a continuous play mode from the memories; therefore, the memories should contain valid data before invoking transactions. The length of each repeatable output stream is controlled by the input memory length. Upon outputting the final input memory length point, the hardware resets to play another set of input memory length points from the memory.

The user invokes the loop mode by writing input memory mode to LOOP. The system is in the loop mode and the input memory status = SEND. The memory starts reading data continuously and a stop can be initiated by setting input memory mode to IDLE during the transaction. The input memory status returns to IDLE and a new loop transaction can be initiated by writing the input memory mode to LOOP. This is the only mode where immediate mode changes are acknowledged during its transaction cycle.

General Comments About Modes

Once a trigger is detected in the ARMED condition, all following triggers are ignored during the sequence. The system does not acknowledge new triggers until a new transaction is invoked and re-armed. When a new mode is invoked, all subsequent invocations of new modes during the duration of its sequence is ignored, except in the loop mode. In the loop mode, an input memory mode change to IDLE is processed immediately.

When in the IDLE, all controls, addresses, and data, default to the processor interface values.

Triggers

When a capture memory is ARMED, i.e. waiting for a trigger to happen, the activation of the trigger occurs in three ways — external, data dependent, and user invoked. The trigger select, 0x04, bits 5:4, provides the selection of the trigger source. When the pre-distorter magnitude bus values fall between the range of 0x09 minimum and 0x0a maximum, the data dependent trigger activates. The first of these transitions causes a trigger to be detected and the remaining triggers during the capture sequence is ignored.

To invoke the user invoked trigger, 0x04, 5:4, set to processor, the programmer writes a TRIGGER to the 0x04, bit 6 processor trigger register. After a TRIGGER is in the field, the user initiates the trigger by just writing to that register. The user does not have to reset the trigger back to IDLE. By setting the processor trigger bit to IDLE when not in use, it keeps the circuit quiet and allows the user to write to other values at that address without causing a trigger to occur during operation. To disable the processor trigger, the user should change trigger select to something other than PROCESSOR and then change values in processor trigger. If trigger select is not set to PROCESSOR, the system ignores the trigger generated by processor trigger.

The feedback and input memory circuit uses the same trigger; both circuits trigger at the same point with its operation registers causing different operations to occur. The user should monitor input memory status and feedback memory status simultaneously before activating triggers. Make sure both status registers are in ARMED before activating triggers or the results from the capture can be erroneous and data can be overwritten. Selecting processor trigger (register 0x04, bits 5:4 = 00) while arming the input and feedback memory circuits is a convenient way to ensure no unexpected triggers occur before confirming ARMED status of both circuits.

Input Data to Input Memory

There are three sources of input data to the input memory — interpolator, pre-distorter's data outputs, and the pre-distorter's magnitude. Data from the interpolator and the predistort output are the upper 16 bits with or without rounding. Only 16 of the original 20 bits of I or Q is loaded into the memory. The I data is read from the memory on the DataHigh register and the Q data, DataLow register.

In the predistort magnitude input, the data is unsigned 16 bits and the software has to reshuffle the data to extract the original magnitude. The DataHigh contains only the pre-distorter magnitude bit 15, and the DataLow contains the pre-distorter magnitude 14:0.

Writing/Reading the Memories from the Processor Interface

In the auto-increment mode, the data is loaded in 16-bit increments. The low word is written or read first followed by the high word. The high word increments the address counter and generates the actual write to the memory. For reading, it just increments the counter. The input memory select 0x04, bit 12, selects the memory to be written to or read from.

When writing or reading a specific address, the 0x0b address register must be loaded before the 0x0c and 0x0d memory data registers. In the write, the high word transaction will trigger the actual write to the memory and a low word must be written first. For additional details, see the uP interface section.

Microprocessor Interface

The microprocessor interface allows the ISL5239 to appear as a memory mapped peripheral to the μP. All registers can be accessed through this interface. The interface consists of a 16 bit bidirectional data bus, P<15:0>, six bit address bus, A<5:0>, a write strobe ($\overline{WR}$), a read strobe ($\overline{RD}$) and a chip enable ($\overline{CE}$). The interface is configured for separate read and write strobe inputs.

The processor interface provides a simple parallel Data/Control/Address bus for monitoring and controlling its operation. The processor interface is asynchronous to the CLK, and BUSY signal is included to indicate when read and write operations are complete.

The register configuration is master/slave, where the slave registers are updated from the masters and all reads access the slaves.

The master registers are clocked by the μP $\overline{WR}$ strobe, are writable and cleared by a hard reset. The slave registers are clocked by CLK, and are readable and cleared by either a hard or soft reset. The transfer of configuration data from the master register to the slave register occurs synchronously after an event and requires a four clock synchronization period.

The μP can perform back-to-back accesses to the register, but must maintain four f_{CLK} periods between accesses to the same address. This limits the maximum μP access rate for the RAM to 125MHz/4 = 31.25MHz.

The address map and bit field details for the microprocessor interface is shown in the Tables 2-48. The procedures for reading and writing to this interface are provided below.

Microprocessor Read/Write Procedure

The ISL5239 offers the user microprocessor read/write access to all of the configuration registers and the capture memory.

Configuration Read/Write Procedure

Write Access to the Configuration Master Registers

Perform a direct write to the configuration master registers by setting up the address A<5:0>, data P<15:0>, enabling the $\overline{CS}$ input, and generating $\overline{WR}$ strobe. The rising edge of the $\overline{WR}$ initiates the transfer to the master register. Registers may be written in any order.

1. Write the global control register 0x00.
2. Write all remaining registers sequentially.
3. Load all IFIP, PD, IFC, CM and ODC coefficients and control words.

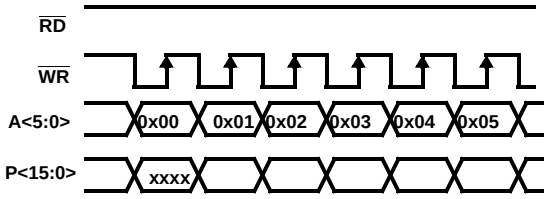

FIGURE 13. CONFIGURATION WRITE TRANSFER

Read Access to the Configuration Slave Registers

1. Perform a direct read of a configuration register by dropping the $\overline{RD}$ line low to transfer data from the register selected by A<5:0> onto the data bus P<15:0>.

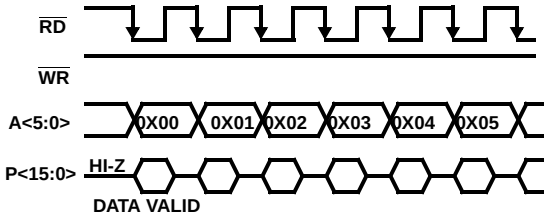

FIGURE 14. CONFIGURATION READ TRANSFER

LUT Read/Write Procedure

Write Access to the LUT Memory

1. Perform a direct write to control word 0x13 by setting up the address on A<5:0>, data on P<15:0>, and generating a rising edge on $\overline{WR}$. 0x13 selects the auto increment mode and the LUT address as specified in bit 9:0.
2. Perform a direct write to any/all control words 0x14, 0x15, or 0x16, in any order, by setting up the address on A<5:0>, data on P<15:0>, and generating a rising edge on $\overline{WR}$.
3. Perform a direct write to control word 0x17 by setting up the address on A<5:0>, data on P<15:0>, and generating a rising edge on $\overline{WR}$. The $\overline{WR}$ updates the contents of 0x014-0x017 and performs the auto increment, if enabled.

Read Access to the LUT

1. Perform a direct write to control word 0x13 by setting up the address on A<5:0>, data on P<15:0>, and generating a rising edge on $\overline{WR}$. 0x13 selects the auto increment mode and the LUT address as specified in bit 9:0.
2. Perform a direct read of any/all control words 0x14, 0x15, 0x16, in any order, by dropping the $\overline{RD}$ line low to transfer data from the slave register selected by A<5:0> onto the data bus P<15:0>.
3. Perform a direct read of control word 0x17 by dropping the $\overline{RD}$ line low to transfer data from the slave register selected by A<5:0> onto the data bus P<15:0>. Reading from this control word performs the auto increment, if enabled.

Capture Memory Read/Write Procedure

Indirect addressing is used to access the Capture Memory. The control word 0x04, bit 12 selects whether the input or feedback memory is accessed and bit 13 selects the auto address increment or manual modes. Control word 0x0b is the memory address, and words 0x0c and 0x0d combine to form the 32-bit word which is written or read from the memory. The write to 0x0d triggers the write to the memory and the auto increment of the address, if enabled. When reading feedback capture memory, 0x0c bits 3:0 will contain the upper four bits, and 0x0d, bits 15:0 will be the remaining 15-bits.

Write Access to the Capture Memory

1. Perform a direct write to control word 0x04 by setting up the address on A<5:0>, data on P<15:0>, and generating a rising edge on $\overline{WR}$. 0x04 selects the auto increment mode and the input or feedback memories.
2. Perform a direct write to control word 0x0b by setting up the address on A<5:0>, data on P<15:0>, and generating a rising edge on $\overline{WR}$. 0x0b selects the starting memory address.
3. Perform a direct write to 0x0c by setting up the address on A<5:0>, data on P<15:0>, and generating a rising edge on $\overline{WR}$.
4. Perform a direct write to control word 0x0d by setting up the address on A<5:0>, data on P<15:0>, and generating a rising edge on $\overline{WR}$. The $\overline{WR}$ updates the contents of 0x0c and 0x0d and performs the auto increment, if enabled.

Read Access to the Capture Memory

1. Perform a direct write to control word 0x04 by setting up the address on A<5:0>, data on P<15:0>, and generating a rising edge on $\overline{WR}$. 0x04 selects the auto increment mode and the input or feedback memories.
2. Perform a direct read of 0x0c by dropping the $\overline{RD}$ line low to transfer data from the slave register selected by A<5:0> onto the data bus P<15:0>.
3. Perform a direct read of control word 0x0d by dropping the $\overline{RD}$ line low to transfer data from the slave register selected by A<5:0> onto the data bus P<15:0>. Reading from this control word performs the auto increment, if enabled.

Correction Filter Read/Write Procedure

Write Access to the Correction Filter Coefficients

1. Perform a direct write to control word 0x28 by setting up the address on A<5:0>, data on P<15:0>, and generating a rising edge on $\overline{WR}$. 0x28 selects the auto increment mode.
2. Perform a direct write to control word 0x29 by setting up the address on A<5:0>, data on P<15:0>, and generating a rising edge on $\overline{WR}$. 0x29 selects the coefficient address for I or Q.
3. Perform a direct write to control word 0x2a by setting up the address on A<5:0>, data on P<15:0>, and generating a rising edge on $\overline{WR}$.
4. Repeat step 3 until all 13 coefficients for I and for Q have been loaded as the master registers are transferred to the slaves when the last Q coefficient is written.

Read Access to the Correction Filter Coefficients

1. Perform a direct write to control word 0x028 by setting up the address on A<5:0>, data on P<15:0>, and generating a rising edge on $\overline{WR}$. 0x28 selects the auto increment mode.
2. Perform a direct write to control word 0x029 by setting up the address on A<5:0>, data on P<15:0>, and generating a rising edge on $\overline{WR}$.
3. Perform a direct read of 0x2a by dropping the $\overline{RD}$ line low to transfer data from the slave register selected by A<5:0> onto the data bus P<15:0>.

Latency

To be provided later.

Reset

There are three types of chip resets.

RESET pin

A hard reset can occur by asserting the input pin $\overline{RESET}$ which resets all chip registers to their default condition, and resets the uP interface.

Software Hard Reset

The μP can issue a reset command through the global control register 0x00, bit 4. This reset is identical to asserting the $\overline{RESET}$ pin, except the control fields 0x00 and 0x01 are not affected, and the uP interface is not reset.

Software Soft Reset

The uP can issue a reset command through the global control register 0x00, bit 0, which is identical to a Software hard reset, but none of the control registers are reset. A soft reset leaves the device in an idle state.

JTAG Test

The IEEE 1149.1 Joint Test Action Group boundary scan standard operational codes shown in Table 9 are supported. A separate application note is available with implementation details and the BSDL file is available.

TABLE 1. JTAG OP CODES SUPPORTED

INSTRUCTION	OP CODE
EXTEST	0000
IDCODE	0001
SAMPLE/PRELOAD	0010
INTEST	0011
BYPASS	1111

Power-up Sequencing

The ISL5239 core and I/O blocks are isolated by structures which may become forward biased if the supply voltages are not at specified levels. During the power-up and power-down operations, differences in the starting point and ramp rates of the two supplies may cause current to flow in the isolation structures which, when prolonged and excessive, can reduce the usable life of the device. In general, the most preferred case would be to power-up or down the core and I/O structures simultaneously. However, it is also safe to power-up the core prior to the I/O block if simultaneous application of the supplies is not possible. In this case, the I/O voltage should be applied within 10 ms to 100 ms nominally to preserve component reliability. Bringing the core and I/O supplies to their respective regulation levels in a maximum time frame of a 100 ms, moderates the stresses placed on both, the power supply and the ISL5239. When powering down, simultaneous removal is preferred, but It is also safe to remove the I/O supply prior to the core supply. If the core power is removed first, the I/O supply should also be removed within 10-100mS.

Application Notes and Evaluation Boards

The ISL5239 operation can be demonstrated via the ISL5239EVAL1 board. All required hardware and Windows GUI software are supplied with both a user's manual and accompanying applications notes.

Absolute Maximum Ratings

Supply Voltage . . . . . +2.5VCCC, 4.6V VCCIO
Input, Output or I/O Voltage . . . . . GND -0.5V to 5.5V
ESD Classification . . . . . Class 2

Operating Conditions

Voltage Range Core, V_{CCC} . . . . . +1.71V to +1.89V
Voltage Range I/O, V_{CCCIO} (Note 3) . . . . . +3.135V to +3.465V
Temperature Range
Industrial . . . . . -40^oC to 85^oC
Input Low Voltage . . . . . 0V to +0.8V
Input High Voltage . . . . . .2V to V_{CC}

Thermal Information

Thermal Resistance (Typical, Notes 1, 2)	θ_{JA} ($^oC/W$)
196 BGA Package	42
w/200 LFM Air Flow	38
w/400 LFM Air Flow	36

Maximum Storage Temperature Range . . . . . -65^oC to 150^oC
Maximum Junction Temperature . . . . . 125^oC

For Recommended Soldering Conditions, See Tech Brief TB334.

CAUTION: Stresses above those listed in "Absolute Maximum Ratings" may cause permanent damage to the device. This is a stress only rating and operation of the device at these or any other conditions above those indicated in the operational sections of this specification is not implied.

NOTES:

1. θ_{JA} is measured in free air with the component mounted on a high effective thermal conductivity test board. See Tech Brief TB379.
2. With "direct attach" features (i.e., vias in the PCB), the thermal resistance is 36 without airflow, w/200 it is 33, w/400 it is $31^oC/W$. Tie 196 BGA package pins F6-9, G6-9, H6-9, J6-9 to heat sink or ground with vias to ensure maximum device heat dissipation.
3. Single supply operation of both the core VCCC and I/O VCCIO at 1.8V is not allowed.

DC Electrical Specifications V_{CCC} = 1.8± 5%, V_{CCIO} = 3.3 ±5%, T_A = -40^oC to 85^oC

PARAMETER	SYMBOL	TEST CONDITIONS	MIN	Typ	MAX	UNITS
Logical One Input Voltage	V_{IH}	V_{CCC} = 1.89V, V_{CCIO} = 3.465V	2.0		-	V
Logical Zero Input Voltage	V_{IL}	V_{CCC} = 1.71V, V_{CCIO} = 3.135V	-		0.8	V
Clock Input High	V_{IHC}	V_{CCC} = 1.89V, V_{CCIO} = 3.465V	2.0		-	V
Clock Input Low	V_{ILC}	V_{CCC} = 1.71V, V_{CCIO} = 3.135V	-		0.8	V
Output High Voltage	V_{OH}	I_{OH} = -2mA, V_{CCC} = 1.71V, V_{CCIO} = 3.135V	2.6	V_{CC}-0.2	-	V
Output Low Voltage	V_{OL}	I_{OL} = 2mA, V_{CCC} = 1.71V, V_{CCIO} = 3.135V		0.2	0.4	V
Input Leakage Current	I_L	V_{IN} = V_{CCIO} or GND, V_{CCC} = 1.89V, V_{CCIO} = 3.465V	-10	1	10	µA
Output Leakage Current	I_H	V_{IN} = V_{CCIO} or GND, V_{CCC} = 1.89V, V_{CCIO} = 3.465V	-10	1	10	µA
Input Pull-up Leakage Current Low	I_{SL}	V_{IN} = V_{CCIO} or GND, $V_{\overline{CCC}}$ = 1.89V, V_{CCIO} = 3.465V, TMS, $\overline{TRST}$, TDI	-100	-50	-	µA
Input Pull-up Leakage Current High	I_{SH}	V_{IN} = V_{CCIO} or GND, $V_{\overline{CCC}}$ = 1.89V, V_{CCIO} = 3.465V, TMS, $\overline{TRST}$, TDI	-	1	10	µA
Standby Power Supply Current	I_{CCSB}	V_{CCC} = 1.89V, V_{CCIO} = 3.465V, Outputs Not Loaded	-	1 100	3 500	mA(core) uA(I/O)
Operating Power Supply Current	I_{CCOP}	f = 125MHz, V_{IN} = V_{CCIO} or GND, V_{CCIO} = 3.465V, V_{CCC} = 1.89V,	-		300 100	mA (Core) mA(I/O), (Note 4)
Input Capacitance	C_{IN}	Freq = 1MHz, V_{CCIO} Open, All Measurements Are Referenced to Device Ground	-		5	pF (Note 5)
Output Capacitance	C_{OUT}	Freq = 1MHz, V_{CCIO} Open, All Measurements are Referenced to Device Ground	-		5	pF (Note 5)

NOTES:

4. Power Supply current is proportional to operation frequency. Typical rating for I_{CCOP} is 2.0 mA/MHz (core) and 0.5mA/MHz(I/O),
5. Capacitance T_A = 25^oC, controlled via design or process parameters and not directly tested. Characterized upon initial design and at major process or design changes.

AC Electrical Specifications

V_{CCC} = 1.8± 5%, V_{CCIO} = 3.3 ± 5%, T_A = -40°C to 85°C (Note 6)

PARAMETER	SYMBOL	MIN	MAX	UNITS
CLK Frequency	f_{CLK}	-	125	MHz
CLK Period	t_{CLK}	8.0	-	ns
CLK High, FBCLK High	t_{CH}	3	-	ns
CLK Low, FBCLK Low	t_{CL}	3	-	ns
Setup Time $\overline{\text{RESET}}$ High to CLK (Note 8)	t_{RS}	2	-	ns
Hold $\overline{\text{RESET}}$ High from CLK	t_{RH}	2	-	ns
$\overline{\text{RESET}}$ Low Pulse Width (Note 7)	t_{RPW}	2	-	CLK Cycles
Setup Time P<15:0> to $\overline{\text{WR}}$	t_{PSW}	1	-	ns
Hold Time P<15:0> from $\overline{\text{WR}}$	t_{PHW}	4	-	ns
Setup Time A<5:0> to $\overline{\text{WR}}$	t_{ASW}	0	-	ns
Hold Time A<5:0> from $\overline{\text{WR}}$	t_{AHW}	4	-	ns
Setup Time $\overline{\text{CS}}$ to $\overline{\text{WR}}$	t_{CSW}	0	-	ns
Hold Time $\overline{\text{CS}}$ from $\overline{\text{WR}}$	t_{CHW}	3	-	ns
Delay Time from $\overline{\text{WR}}$ to $\overline{\text{BUSY}}$	t_{BDW}	-	8	ns
Setup Time $\overline{\text{WR}}$ to CLK (Note 9)	t_{WSC}	3	-	ns
Hold Time $\overline{\text{WR}}$ from CLK	t_{WHC}	0	-	ns
$\overline{\text{WR}}$ Pulse Width High	t_{WPWH}	3	-	ns
$\overline{\text{WR}}$ Pulse Width Low	t_{WPWL}	3	-	ns
Setup Time from $\overline{\text{RD}}$ to CLK	t_{RSR}	1	-	ns
Hold Time $\overline{\text{RD}}$ from CLK	t_{RHR}	2	-	ns
Setup Time from $\overline{\text{CS}}$ to CLK	t_{CSR}	1	-	ns
Hold Time $\overline{\text{CS}}$ from CLK	t_{CHR}	2	-	ns
Setup Time from A<5:0> to $\overline{\text{CS}}$ and $\overline{\text{RD}}$ (Note 7)	t_{ASR}	-2	-	CLK Cycles
Setup Time from A<5:0> to CLK	t_{ASC}	3	-	ns
Delay Time from $\overline{\text{CS}}$ and $\overline{\text{RD}}$ to P<15:0> Enable (Note 7)	t_{RE}	-	8	ns
Delay Time from $\overline{\text{CS}}$ and $\overline{\text{RD}}$ to P<15:0> Disable (Note 7)	t_{RD}	-	6	ns
Delay Time from CLK to P<15:0> valid	t_{DR1}	-	7	ns
Setup Time IIN<17:0>, QIN<17:0>, or ISTRB to CLK	t_{DS}	2	-	ns
Hold Time IIN<17:0>, QIN<17:0>, or ISTRB from CLK	t_{DH}	2	-	ns
Delay Time from CLK to CLKOUT in x1 Mode	t_{CC01}		7	ns
Delay Time from CLK to CLKOUT in x2, x4, x8 Mode	t_{CC0N}		8	ns
Delay Time from CLK to IOUT<17:0>, QOUT<17:0> valid	t_{PDC1}	2 (Note 7)	8	ns
Time Skew from CLK to FBCLK (Note 7)	t_{CFBD}	-0.1	t_{CLK} - 2	ns
Setup Time from FB<19:0> to FBCLK	t_{FS}	2		ns
Hold Time FB<19:0> from FBCLK	t_{FH}	1		ns
Delay Time from CLK to SERSYNC	t_{SD1}	2 (Note 7)	7	ns
Delay Time from CLK to SEROUT	t_{SD2}	2 (Note 7)	8	ns
Delay Time from CLK to SERCLK in Period_32 Mode	t_{SC1}	2 (Note 7)	9	ns
Delay Time from CLK to SERCLK in Period_64 or Period_128 Modes	t_{SCN}	2 (Note 7)	8	ns
Setup Time from SERIN to CLK (Note 7)	t_{DSS}	1		ns

AC Electrical Specifications V_{CCC} = 1.8± 5%, V_{CCIO} = 3.3 ± 5%, T_A = -40°C to 85°C (Note 6) **(Continued)**

PARAMETER	SYMBOL	MIN	MAX	UNITS
Hold Time SERIN from CLK (Note 7)	t_{DHS}	1		ns
Delay Time from CLK to TRIGOUT	t_{PDC}	2 (Note 7)	7	ns
Setup Time from TRIGIN to CLK	t_{DS1}	2		ns
Hold Time TRIGIN from CLK	t_{DH1}	2		ns
Setup Time from TMS and TDI to TCK	t_{TS}	3		ns
Hold Time TMS and TDI from TCK	t_{TH}	3		ns
Delay Time from TCK to TDO valid	t_{TD}		8	ns
Test Clock Frequency	f_T		50	MHz
Output Rise/Fall Time (Note 7)	t_{RF}	-	3	ns

NOTES:

6. AC tests performed with C_L = 70pF. Input reference level for CLK is 1.5V, all other inputs 1.5V. Test V_{IH} = 3.0V, V_{IHC} = 3.0V, V_{IL} = 0V, V_{OL} = 1.5V, V_{OH} = 1.5V.
7. Controlled via design or process parameters and not directly tested. Characterized upon initial design and at major process or design changes.
8. Can be asynchronous to CLK, specification guarantying which CLK edge the device comes out of reset on.
9. Can be asynchronous to CLK, specification guarantying which CLK edge the device begins the read cycle on.

AC Test Load Circuit

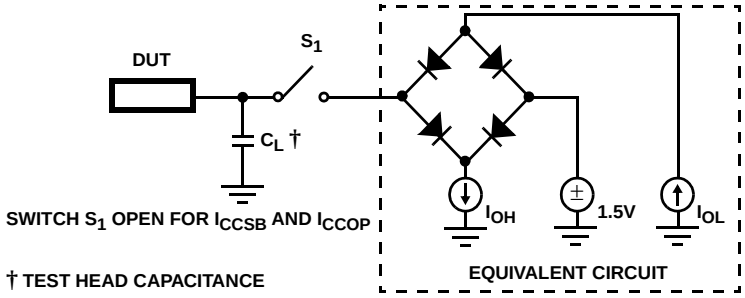

Waveforms

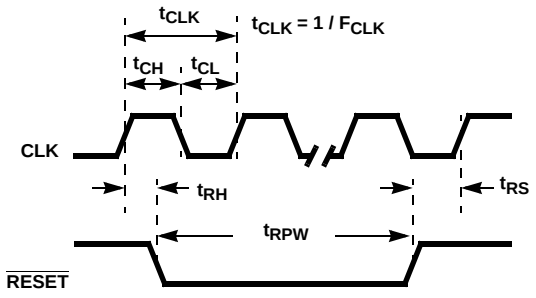

FIGURE 15. CLOCK AND RESET TIMING

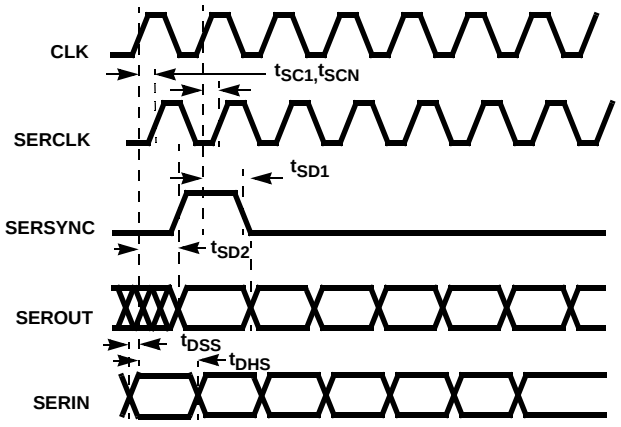

FIGURE 16. SERIAL INTERFACE RELATIVE TIMING

Waveforms (Continued)

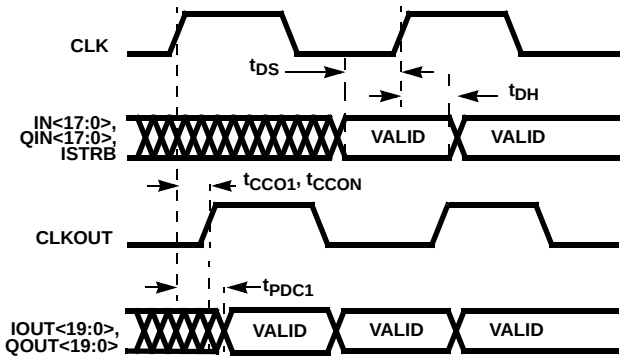

FIGURE 17. INPUT/OUTPUT TIMING

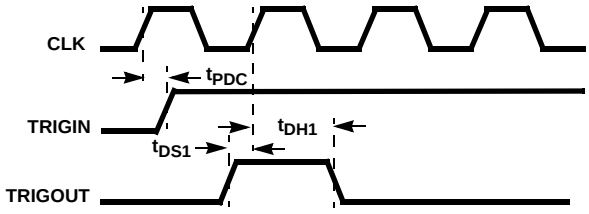

FIGURE 18. TRIGGER PORT TIMING

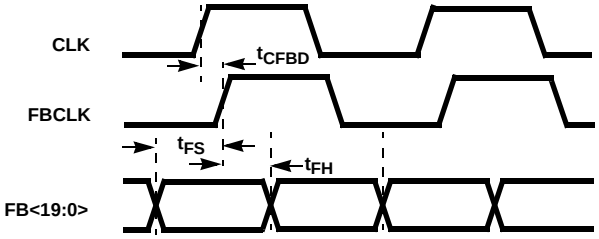

FIGURE 19. FEEDBACK TIMING

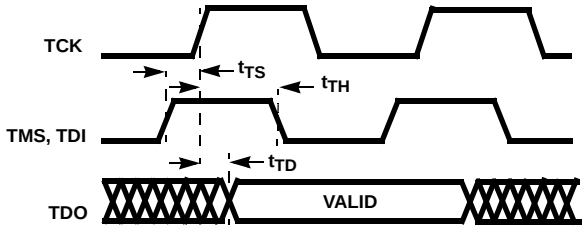

FIGURE 20. JTAG TIMING

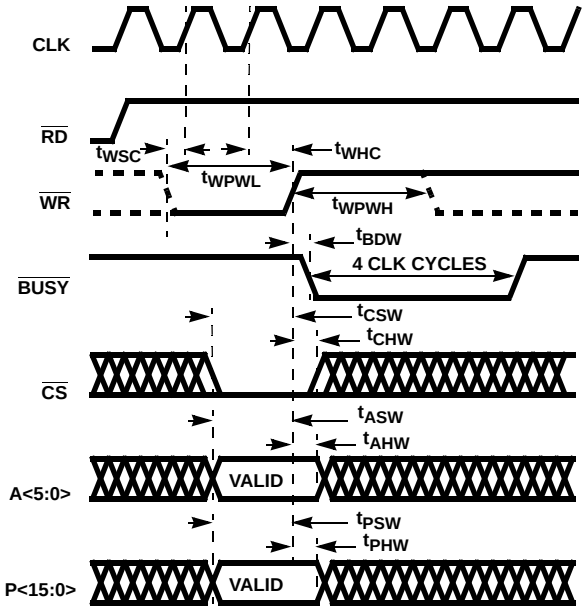

FIGURE 21. MICROPROCESSOR WRITE TIMING

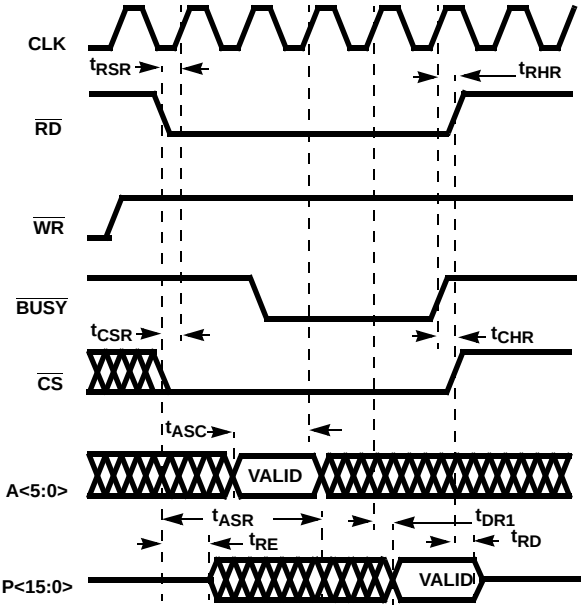

FIGURE 22. MICROPROCESSOR READ TIMING

Programming Information and Device Control Registers

TABLE 2. CONTROL REGISTER MAP

ADDRESS (5:0)	TYPE	FUNCTION	DESCRIPTION	RESET DEFAULT
00	R/W	Global	Chip Control	0x0000
01	R		Chip ID	0x0000
02	R/W	Input Formatter and Interpolator	Control	0x0000
03	R		Status	0x0000
04	R/W	Capture Memory	Control	0x0000
05	R/W		Length of Input Memory Loops	0x0000
06	R/W		Input Memory Capture Mode and Trigger Delay	0x0000
07	R/W		Operating Modes	0x0000
08	R/W		Feedback Memory Capture Mode and Trigger Delay	0x0000
09	R/W		Magnitude Threshold Minimum Value	0x0000
0a	R/W		Magnitude Threshold Maximum Value	0x0000
0b	R/W		Memory Address	0x0000
0c	R/W		Memory Data LSW	0x0000
0d	R/W		Memory Data MSW	0x0000
0e	R		Input Memory Status	0x0000
0f	R		Feedback Memory Status	0x0000
10	R/W	Pre-Distorter	Control	0x0000
11	R/W		Magnitude Function Control	0x0000
12	R/W		Magnitude Function Scale Factor	0x0000
13	R/W		Look-Up Table Control	0x0000
14	R/W		Look-Up Table Delta Imaginary Data	0x0000
15	R/W		Look-Up Table Delta Real Data	0x0000
16	R/W		Look-Up Table Imaginary Data	0x0000
17	R/W		Look-Up Table Real Data	0x0000
18	R/W		Memory Effect Control	0x0000
19	R/W		Memory Effect Coefficient A	0x0000
1a	R/W		Memory Effect Coefficient B	0x0000
1b	R/W		Memory Effect Power Integrator LSW	0x0000
1c	R/W		Memory Effect Power Integrator MSW	0x0000
1d	R		Status	0x0000
20	R/W	IF Converter	Control	0x0002
21	R		Status	0x0000
28	R/W	Correction Filter	**Control**	0x0000
29	R/W		Coefficient Index	0x0000
2a	R/W		Coefficient Value	0x0000
2b	R		Status	0x0000

TABLE 2. CONTROL REGISTER MAP (Continued)

ADDRESS (5:0)	TYPE	FUNCTION	DESCRIPTION	RESET DEFAULT
30	R/W	Output Data Conditioner	Control	0x0000
31	R/W		I-to-I (hm) Coefficient	0x0000
32	R/W		Q-to-I (km) Coefficient	0x0000
33	R/W		I-to-Q(Im) Coefficient	0x0000
34	R/W		Q-to-Q (gm) Coefficient	0x0000
35	R/W		I-Channel DC Offset MSW	0x0000
36	R/W		I-Channel DC Offset LSW	0x0000
37	R/W		Q-Channel DC Offset MSW	0x0000
38	R/W		Q-Channel DC Offset LSW	0x0000
39	R		Status	0x0000

TABLE 3. CHIP CONTROL

TYPE: GLOBAL: ADDRESS: 0x00		
BIT	**FUNCTION**	**DESCRIPTION**
15:11	Reserved	Not Used
10:8	ID Index	Pointer that selects a pair of characters from the Chip Identification, where the Chip Identification is a string of 16 ASCII characters. The ChipID field provides access to the selected character pair. For example, if the Chip Identification is the first 16 letters of the alphabet,—“ABCD…P”—then setting ID_Index = PAIR_0, selects the left-most pair, AB, which can be accessed by reading the ChipID field. Setting ID_Index = PAIR_1, selects the pair, CD. 000 - Pair 0 001 - Pair 1 010 - Pair 2 011 - Pair 3 100 - Pair 4 101 - Pair 5 110 - Pair 6 111 - Pair 7
7:5	Reserved	Not Used
4	Hard Reset	Control bit that resets the entire chip except the Processor Interface (PI) block. Identical to asserting $\overline{\text{RESET}}$, except: (1) it does not reset the control fields, ID Index, Hard Reset, Soft Reset, and Chip ID. (2) it does not reset the PI Controller in the PI block. 0 - Reset not active (default). 1 - Reset is active for the entire chip except the PI block.
3:1	Reserved	Not Used.
0	Soft Reset	Control bit that is identical to Hard Reset except that it does not reset any control registers. 0 - Reset not active (default). 1 - Reset is active for the entire chip except the PI block and all control registers.

TABLE 4. CHIP ID

TYPE: GLOBAL: ADDRESS: 0x01		
BIT	**FUNCTION**	**DESCRIPTION**
15:0	Chip ID	Pair of ASCII character codes for the Chip Identification, where the Chip Identification is a string of 16 ASCII characters. The ChipID field provides access to the characters selected by ID_Index. From the example in the ID_Index description, reading ChipID with ID_Index = PAIR_0 returns the ASCII code for “AB”. The ASCII code for “A” is 0x41, and the ASCII code for “B” is 0x42; therefore, ChipID would have the value 0x4142.

TABLE 5. CONTROL

TYPE: INPUT FORMATTER AND INTERPOLATOR, ADDRESS: 0x02		
BIT	**FUNCTION**	**DESCRIPTION**
15	Reserved	Not used.
14	Clear Status	Set high to clear all status bits, set low (default) to allow the status bits to update.
13:8	Reserved	Internal use only.
7	Reserved	Not used.
6:4	Interpolation Factor	The chip upsamples its input data by x1, x2, x4, or x8, and it performs the appropriate filtering to reject the images created by the upsampling operation. Interpolation by 1 bypasses all the interpolation filters. 000 - x1 (default) 001 - x2 011 - x4 111 - x8 010, 100, 101, 110 Internal Use Only.
3	Reserved	Not used.
2	Input Sequence Type	The type of sample sequence of the Input Formatter and Interpolator input data IIN<17:0>, QIN<17:0>. 0 - PARALLEL. (default) The chip receives I and Q data in parallel through IIN<17:0>, QIN<17:0>The chip ignores the input signal, ISTRB, in this mode. 1 - SERIAL. The chip receives I and Q data in a serial stream through IIN<17:0>. The serial stream alternates between I and Q samples, and the chip uses the input signal, ISTRB, to detect which samples are I and which samples are Q. The chip ignores the input signal QIN<17:0> in this mode.
1	Input Value Type	Allows selection of the input type as 2’s complement or offset binary. 0 - 2’s complement (default) Input data. 1 - Offset Binary Input data.
0	Soft Reset	Soft reset that, when high, resets all input formatter and interpolator circuitry except the control fields.

TABLE 6. STATUS

TYPE: INPUT FORMATTER AND INTERPOLATOR, ADDRESS: 0x03		
BIT	**FUNCTION**	**DESCRIPTION**
15:14	Reserved	Not used.
13	Reserved	Internal use only.
12:8	Reserved	Internal use only.
7	HB 3 Q Saturation	When high, bit indicates HB 3 saturated at least one sample in the Q channel since the last clear status command. Invalid when Interpolation factor < x8.
6	HB 3 I Saturation	When high, bit indicates HB 3 saturated at least one sample in the I channel since the last clear status command. Invalid when Interpolation factor < x8.
5	HB 2 Q Saturation	When high, bit indicates HB 2 saturated at least one sample in the Q channel since the last clear status command. Invalid when Interpolation factor < x8.
4	HB 2 I Saturation	When high, bit indicates HB 2 saturated at least one sample in the I channel since the last clear status command. Invalid when Interpolation factor < x8.
3	HB 1Q Saturation	When high, bit indicates HB 1 saturated at least one sample in the Q channel since the last clear status command. Invalid when Interpolation factor < x2.
2	HB 1I Saturation	When high, bit indicates HB 1 saturated at least one sample in the I channel since the last clear status command. Invalid when Interpolation factor < x2.
1	Serial Mode Error	When high, indicated the input formatter and interpolator block performed an illegal operation since the last clear status command.
0	Serial Mode Error Active	When high, indicates the input formatter and interpolator block is performing an illegal operation. Not impacted by the clear status command.

TABLE 7. CONTROL

TYPE: CAPTURE MEMORY, ADDRESS: 0x04		
BIT	**FUNCTION**	**DESCRIPTION**
15:14	Reserved	Not used.
13	Address Auto Increment	When set high, automatically increments the memory address after any access operation (read or write).
12	Memory Select	Selects the memory for access. 0 - Input memory (default). 1 - Feedback memory.
11:9	Reserved	Not used.
8	Feedback Input Format	Selects the feedback input format. 0 - Parallel (default) uses FB<19:0> as a 20-bit parallel input. 1 - Serial uses FB<0> as the input data bit and FB<1> as the serial sync, sampled at the rising edge of FBCLK.
7	Reserved	Not used.
6	Processor Trigger	When high, enables the trigger. Low (default) is trigger disabled.
5:4	Trigger Select	Selects the trigger mode. 00 - Processor trigger used (default). 01 - Magnitude trigger when min threshold <= magnitude <= maximum threshold. 10 - External trigger.
3	Reserved	Not used.
2:1	Input Memory Data in Source	Select the input memory dataIn Source. 00 - Interpolator output (default). 01 - Pre-distortion Output. 10 - Pre-distortion Magnitude.
0	CM Soft Reset	When high, resets all the configuration memory circuitry except the control fields. Low is default.

TABLE 8. LENGTH OF INPUT MEMORY LOOP

TYPE: CAPTURE MEMORY, ADDRESS: 0x05		
BIT	**FUNCTION**	**DESCRIPTION**
15:11	Reserved	Not Used
10:0	Input Length	Length of the input memory loop. Specified from 2^0(1) to 2^{11} (2047). Default = 0. Resets the input memory address to 0 when input length reached. Actual loop length is this value + 2.

TABLE 9. INPUT MEMORY CAPTURE MODE AND TRIGGER DELAY

TYPE: CAPTURE MEMORY, ADDRESS: 0x06		
BIT	**FUNCTION**	**DESCRIPTION**
15	Input Memory Capture Mode	Selects the active capture mode when the input capture memory is running. Identical to feedback capture mode except applies to the input memory. 0 - Delay. (default) Defines the beginning of the 2k sample capture window as the trigger point plus the input trigger delay counter samples. 1 - Advance. Defines the end of the 2k-sample capture window as the trigger point plus the input trigger delay counter samples. See control word 0x07, bit 1:0 for mode selection.
14:0	Input Trigger Delay Counter	Offset delay that defines the input memory capture window when control word 0x07, bits 1:0 = 01 (Capture mode). When control word 0x06, bit 15 is set to 0, delay mode, values selectable from 2^0 to 2^{15} (0...32768). When control word 0x06, bit 15 is set to 1, advance mode, value selectable from 2^0 to 2^{11} (0...2047).

TABLE 10. OPERATING MODES

TYPE: CAPTURE MEMORY, ADDRESS: 0x07		
BIT	**FUNCTION**	**DESCRIPTION**
15:5	Reserved	Not used.
4	Feedback Memory Mode	Selects the feedback memory operating mode as 0 - Idle. (default) Memory not operating. 1 - Capture. Memory is capturing data in accordance with the mode and trigger settings specified in control word 0x08.
3:2	Reserved	Not used.
1:0	Input Memory Mode	Selects the capture memory operating mode as 00 - Idle. (default) Memory not operating. 01 - Capture. Memory is capturing data in accordance with the mode and trigger settings specified in control word 0x06. 10 - Loop. Input memory plays back data in a continuous loop to provide stimulus. 11 - Single. Input memory plays back data in a one pass through its contents to provide stimulus.

TABLE 11. FEEDBACK MEMORY CATPURE MODE AND TRIGGER DELAY

TYPE: CAPTURE MEMORY, ADDRESS: 0x08		
BIT	**FUNCTION**	**DESCRIPTION**
15	Feedback Memory Capture Mode	Selects the active capture mode when the feedback capture memory is running. Identical to input capture mode except applies to the feedback memory. 0 - Delay. (default) Defines the beginning of the 1k sample capture window as the trigger point plus the feedback trigger delay counter samples. 1 - Advance. Defines the end of the 1k-sample capture window as the trigger point plus the feedback trigger delay counter samples. See control word 0x07, bit 4 for mode selection
14:0	Feedback Trigger Delay Counter	Offset delay that defines the feedback memory capture window when control word 0x07, bits 4 = 1 (Capture mode) When control word 0x08, bit 15 is set to 0, delay mode, values selectable from 2^0 to 2^{15} (0...32767) When control word 0x08, bit 15 is set to 1, advance mode, value selectable from 2^0 to 2^{10} (0...1023)

TABLE 12. MAGNITUDE THRESHOLD MINIMUM VALUE

TYPE: CAPTURE MEMORY, ADDRESS: 0x09		
BIT	**FUNCTION**	**DESCRIPTION**
15:0	Magnitude Threshold Minimum	Default = 0. Value selectable from 2^0 to 2^{16} (0...65535). Magnitude-based trigger is generated when the magnitude value is greater than or equal to this value and less than or equal to the value in control word 0x0a.

TABLE 13. MAGNITUDE THRESHOLD MAXIMUM VALUE

TYPE: CAPTURE MEMORY, ADDRESS: 0x0a		
BIT	**FUNCTION**	**DESCRIPTION**
15:0	Magnitude Threshold Maximum	Default = 0. Value selectable from 2^0 to 2^{16} (0...65535). Magnitude-based trigger is generated when the magnitude value is less than or equal to this value and greater than or equal to the value in control word 0x09

TABLE 14. MEMORY ADDRESS

TYPE: CAPTURE MEMORY, ADDRESS: 0x0b		
BIT	**FUNCTION**	**DESCRIPTION**
15:11	Reserved	Not used.
10:0	Memory Address	Index into memory value. Default = 0. Selectable from 2^0 to 2^{11} (0...2047).

TABLE 15. MEMORY DATA LSW

TYPE: CAPTURE MEMORY, ADDRESS: 0x0c		
BIT	**FUNCTION**	**DESCRIPTION**
15:0	Memory Data <15:0>	Lower 16 bits of capture memory data word.

TABLE 16. MEMORY DATA MSW

TYPE: CAPTURE MEMORY, ADDRESS: 0x0d		
BIT	**FUNCTION**	**DESCRIPTION**
15:0	Memory Data <31:16>	Higher 16 bits of capture memory data word. Writing to this address triggers the write to the memory and increments the address counter when address auto increment, control word 0x04, bit 13 is set. Must write control word 0x0c first, to load the data values into memory.

TABLE 17. INPUT MEMORY STATUS

TYPE: CAPTURE MEMORY, ADDRESS: 0x0e		
BIT	**FUNCTION**	**DESCRIPTION**
15:14	Reserved	Not used.
13:12	Input Capture Status	Read only register with status defined as: 00 - Idle, Memory access OK. 01 - Armed. Capture memory waiting for trigger. 10 - Loading. Capture memory in load mode. 11 - Send. Memory sends data to downstream modules.
10:0	Input Trigger Position	Read only register which records memory location of input trigger point. 2^0 to 2^{11} (0...2047).

TABLE 18. FEEDBACK MEMORY STATUS

TYPE: CAPTURE MEMORY, ADDRESS: 0x0f		
BIT	**FUNCTION**	**DESCRIPTION**
15:14	Reserved	Not used.
13:12	Feedback Capture Status	Read only register with status defined as: 00 - Idle, Memory access OK. 01 - Armed. Capture memory waiting for trigger. 10 - Loading. Capture memory in load mode.
10	Reserved	Not used.
9:0	Feedback Trigger Position	Read only register which records memory location of feedback trigger point. 2^0 to 2^{10} (0...1023).

TABLE 19. CONTROL

TYPE: PRE-DISTORTER, ADDRESS: 0x10		
BIT	**FUNCTION**	**DESCRIPTION**
15:3	Reserved	Not used.
2	Test	Selects use of test inputs 0 - Off. IIN<17:0>, QIN<17:0> in use for input stream. 1 - On. Use capture memory output for pre-Distorter input. Note: Test inputs are 16-bits wide and are MSB justified onto the pre-distorter 20-bit inputs by setting the four LSB's to zero.
1	Bypass	Disables processing and allows input data to flow to output without any pre-distorter modification. 0 - Pre-distorter is active and processing. 1 - Pre-distorter is bypassed.
0	Reset	Software generated logic reset, which when high, resets the pre-distorter circuitry. Low is default.

TABLE 20. MAGNITUDE FUNCTION CONTROL

TYPE: PRE-DISTORTER, ADDRESS: 0x11		
BIT	**FUNCTION**	**DESCRIPTION**
15:14	Reserved	Not used
13:12	Magnitude Function Select	Selects the magnitude calculation function as: 00 - Log. Log base 2 of magnitude squared computed as $\log2(I^2 + Q^2)$ 01 - Linear. Linear magnitude computed as sqrt $(I^2 + Q^2)$ 10 - Power. Magnitude squared computed as $(I^2 + Q^2)$
11:0	Address Offset	Linear offset of magnitude function when calculating LUT address (e.g. power backoff) Selectable from (-1024...1024) in increments of 2^{-1}. Note: Setting the LSB of this value permits rounding of the resulting address. Clearing the LSB causes truncation. (0xFFFFF --> 0x00000 maps to -1024 to 0, and 0x00001 --> 0x7FFFF maps to 0.5 to 1023.5).

TABLE 21. I - MAGNITUDE FUNCTION SCALE FACTOR

TYPE: PRE-DISTORTER, ADDRESS: 0x12		
BIT	**FUNCTION**	**DESCRIPTION**
15:13	Reserved	Not Used.
12:0	Address Scale	Linear scale of magnitude function when calculating LUT address (e.g. db/LSB) Selectable from (0.(64-increment)), in increments of 2^{-7}.

TABLE 22. Q - LOOK-UP TABLE CONTROL

TYPE: PRE-DISTORTER, ADDRESS: 0x13		
BIT	**FUNCTION**	**DESCRIPTION**
15:14	Reserved	Not Used.
13	Active LUT	Selects which ping pong LUT is currently in use. The opposite LUT shall be accessible through the processor interface. 0 - Use LUT 0, access LUT 1. 1 - Use LUT 1, access LUT 0.
12	LUT Address Auto Increment	Set high to automatically increment LUT address after any access operation (read/write). Default is low, not auto increment.
11:10	Reserved	Not used.
9:0	LUT Address	Address for index into LUT. Default = 0, pointer to next LUT location.

TABLE 23. LOOK-UP TABLE DELTA IMAGINARY DATA

TYPE: PRE-DISTORTER, ADDRESS: 0x14		
BIT	**FUNCTION**	**DESCRIPTION**
15:14	Reserved	Not used.
13:0	LUT Data Delta Q	Delta imaginary Data written to or read back from LUT. Delta Q controls memory effect. Selectable as (-0.125...(0.125-increment)) in increments of 2^{-16}. Default = 0.

TABLE 24. LOOK-UP TABLE DELTA REAL DATA

TYPE: PRE-DISTORTER, ADDRESS: 0x15		
BIT	**FUNCTION**	**DESCRIPTION**
15:14	Reserved	Not used.
13:0	LUT Data Delta I	Delta real data written to or read back from LUT. Delta I controls memory effect. Selectable as (-0.125...(0.125-increment)) in increments of 2^{-16}. Default = 0.

TABLE 25. LOOK-UP TABLE IMAGINARY DATA

TYPE: PRE-DISTORTER, ADDRESS: 0x16		
BIT	**FUNCTION**	**DESCRIPTION**
15:0	LUT Data Q	Imaginary distortion data written to or read back from LUT. Selectable as (-0.5...(0.5-increment)) in increments of 2^{-16}. Default = 0.

TABLE 26. LOOK-UP TABLE REAL DATA

TYPE: PRE-DISTORTER, ADDRESS 0x17		
BIT	**FUNCTION**	**DESCRIPTION**
15:0	LUT Data I	Real distortion data written to or read back from LUT. Selectable as (-0.5...(0.5-increment)) in increments of 2^{-16}. Default = 0.

TABLE 27. MEMORY EFFECT CONTROL

TYPE: PRE-DISTORTER, ADDRESS: 0x18		
BIT	**FUNCTION**	**DESCRIPTION**
15:13	Reserved	Not used.
12	Serial Output Enable	Set to high to enable the external serial interface output pins. Default is low, disabled.
11:9	Reserved	Not used
8	Serial Input Enable	Set to high to enable the external serial interface input pin SERIN data to override the processor settings. Default is low, disabled, processor settings over-ride serial inputs.
7:6	Reserved	Not used.
5:4	Power Integrator Period	Select the number of samples in the power integrate/dump operation. Also controls the SERCLK frequency. 00 - 128 samples, SERCLK runs at CLK/4. 01 - 64 samples, SERCLK runs at CLK/2. 10 - 32 samples, SERCLK runs at CLK.
3:1	Reserved	Not used.
0	Thermal Coefficient B	Set to high to select A^2, low to select B (default).

TABLE 28. MEMORY EFFECT COEFFICIENT A

TYPE: PRE-DISTORTER, ADDRESS: 0x19		
BIT	**FUNCTION**	**DESCRIPTION**
15:0	Thermal Coef. A	Coefficient A for memory effect selectable from (-1.0...(1-increment)) in increments of 2^{-15}. If control word 0x18, bit 8 high, reading this control word returns the value from SERIN.

TABLE 29. MEMORY EFFECT COEFFICIENT B

TYPE: PRE-DISTORTER, ADDRESS: 0x1a		
BIT	**FUNCTION**	**DESCRIPTION**
15:0	Thermal Coef. B	Coefficient B for memory effect selectable from (-1.0...(1-increment)) in increments of 2^{-15}. If control word 0x18, bit 8 high, reading this control word returns the value from SERIN.

TABLE 30. MEMORY EFFECT POWER INTEGRATOR LSW

TYPE: PRE-DISTORTER, ADDRESS: 0x1b		
BIT	**FUNCTION**	**DESCRIPTION**
15:0	Power Integrator <15:0>	Power integrator LSW.

TABLE 31. MEMORY EFFECT POWER INTEGRATOR MSW

TYPE: PRE-DISTORTER, ADDRESS: 0x1c		
BIT	**FUNCTION**	**DESCRIPTION**
15:0	Power Integrator <31:16>	Power integrator MSW. The Power Integrator [31:0] forms an unsigned fixed point number with 9 integer and 23 fractional bits (u9.23).

TABLE 32. STATUS

TYPE: PRE-DISTORTER, ADDRESS: 0x1d		
BIT	**FUNCTION**	**DESCRIPTION**
15:1	Reserved	Not used.
0	Reserved	Internal use only.

TABLE 33. CONTROL

TYPE: IF CONVERTER, ADDRESS: 0x20		
BIT	**FUNCTION**	**DESCRIPTION**
15:14	Reserved	Not used.
13:12	Reserved	Internal use only.
11:9	Reserved	Not used.
8	Reserved	Internal use only.
7:6	Reserved	Not used.
5:4	IF Conv. Mode	Selects the operational mode of the IF converter as: 00 - Disabled. Default mode which zeroes data into pipeline. 01 - Real x1. Real I outputs only, shifted by Fs/4. 10 - Real x2. Real samples output shifted by Fs/4. The sample on the I port is the first, earlier, sample of the pair. 11 - Complex. Complex outputs shifted by Fs/4.
3	Reserved	Not used.
2	IF Conv. Status Clear	When set high, clears the IF Conv. status bits. Set low for normal operation and to allow the status bits to update.
1	IF Conv. Bypass	When set high (default), bypasses the IF conv. stage. Set low for normal processing.
0	IF Conv. Reset	When set high, resets the IF conv. state machine. Set low (default) for normal operation.

TABLE 34. STATUS

TYPE: IF CONVERTER, ADDRESS: 0x21		
BIT	**FUNCTION**	**DESCRIPTION**
15:4	Reserved	Not used.
3:2	Reserved	Internal use only.
1	I Channel Saturation	When high, indicates the IF conv. saturated at least one sample since the last control word 0x20, bit 2 command.
0	Q Channel Saturation	When high, indicates the IF conv. saturated at least one sample since the last control word 0x20, bit 2 command.

TABLE 35. CONTROL

TYPE: CORRECTION FILTER, ADDRESS: 0x28		
BIT	**FUNCTION**	**DESCRIPTION**
15	Reserved	Not used.
14:12	Reserved	Internal use only.
11:10	Reserved	Not used.
9:8	Reserved	Internal use only.
7:5	Reserved	Not used.
4	Address Auto Increment	Set high to automatically increment coef/address after any access operation (read/write). Low (default) is not auto increment.
3	Real Pipeline Select	Set high to configure the filter to process muxed real data, with the values arriving on the IIN<17:0> port in serial fashion with I following Q. Set low (default) for complex operation.
2	Clear Status	Set high to clear all status bits, low for normal status bit updates.
1	Bypass	Set high (default) to bypass the correction filter, low to enable processing.
0	Reserved	Not used.

TABLE 36. COEFFICIENT INDEX

TYPE: CORRECTION FILTER, ADDRESS: 0x29		
BIT	**FUNCTION**	**DESCRIPTION**
15:8	Reserved	Not used.
7:0	Coefficient Address	Pointer to current LUT location. Default is 0. 0x00-0x7F are I coefficients, 0x80-0xff are Q coefficients. Master register to slave register transfer occurs after the processor interface last write to the Q coefficient. The circuit uses the slave registers. All reads are from the slave register values. There are 13 each I and Q coefficients.

TABLE 37. COEFFICIENT VALUE

TYPE: CORRECTION FILTER, ADDRESS: 0x2a		
BIT	**FUNCTION**	**DESCRIPTION**
15:0	Coefficient Data	Coefficient data access. Default = 0, non centered coef. Default = $1 - 2^{(1-15)}$ centered coef.

TABLE 38. STATUS

TYPE: CORRECTION FILTER, ADDRESS: 0x2b		
BIT	**FUNCTION**	**DESCRIPTION**
15:4	Reserved	Not used.
3:2	Reserved	Internal use only.
1	I Channel Saturation	When high indicates the correction filter saturated at least one sample since the last control word 0x28, bit 2 command.
0	Q Channel Saturation	When high indicates the correction filter saturated at least one sample since the last control word 0x28, bit 2 command.

TABLE 39. CONTROL

TYPE: OUTPUT DATA CONDITIONER, ADDRESS: 0x30		
BIT	**FUNCTION**	**DESCRIPTION**
15:8	Reserved	Not used.
8	Reserved	Internal use only.
7:4	Output Word Width	Select the width of the output data bus IOUT<17:0> and QOUT<17:0>. 0000 - 8 bits 0001 - 9 bits 0010 - 10 bits 0011 - 11 bits 0100 - 12 bits 0101 - 13 bits 0110 - 14 bits 0111 - 15 bits 1000 - 16 bits 1001 - 17 bits 1010 - 18 bits (default)
3	Output Format	Set high to select offset binary, low to select 2’s compliment.
2	Status clear	Set high to clear all status bits, low to enable bits to be active.
1	Bypass	Set high (default) to bypass, low to enable output processing.
0	Reserved	Not used.

TABLE 40. I-to-I (HM) COEFFICIENT

TYPE: OUTPUT DATA CONDITIONER, ADDRESS: 0x31		
BIT	**FUNCTION**	**DESCRIPTION**
15:0	hm Coefficient	I-to-I (hm) coefficient values loaded from the master registers to the slave registers when the user writes the last coefficient register in control word 0x38. The slave registers are used in the datapath. All reads return slave register values. Default $1\text{-}2^{(1\text{-}15)}$.

TABLE 41. Q-to-I (KM) COEFFICIENT

TYPE: OUTPUT DATA CONDITIONER, ADDRESS: 0x32		
BIT	**FUNCTION**	**DESCRIPTION**
15:0	km Coefficient	Q-to-I (km) master register. Default 0.

TABLE 42. I-to-Q (LM) COEFFICIENT

TYPE: OUTPUT DATA CONDITIONER, ADDRESS: 0x33		
BIT	**FUNCTION**	**DESCRIPTION**
15:0	lm Coefficient	I-to-Q (lm) master register. Default 0.

TABLE 43. Q-toQ (GM) COEFFICIENT

TYPE: OUTPUT DATA CONDITIONER, ADDRESS: 0x34		
BIT	**FUNCTION**	**DESCRIPTION**
15:0	Gm Coefficient	Q-to-Q (Gm) master register. Default $1\text{-}2^{(1\text{-}15)}$

TABLE 44. I CHANNEL DC OFFSET MSW

TYPE: OUTPUT DATA CONDITIONER, ADDRESS: 0x35		
BIT	**FUNCTION**	**DESCRIPTION**
15:4	Reserved	Not used.
3:0	DC I Offset <19:16>	I DC offset master register containing the upper four bits of the I DC offset.

TABLE 45. I CHANNEL DC OFFSET LSW

TYPE: OUTPUT DATA CONDITIONER, ADDRESS: 0x36		
BIT	**FUNCTION**	**DESCRIPTION**
15:0	DC I Offset <15:0>	I DC offset master register containing the lower 16 bits of the I DC offset.

TABLE 46. Q CHANNEL DC OFFSET MSW

TYPE: OUTPUT DATA CONDITIONER, ADDRESS: 0x37		
BIT	**FUNCTION**	**DESCRIPTION**
15:4	Reserved	Not used.
3:0	DC Q Offset <19:16>	Q DC offset master register containing the upper four bits of the Q DC offset.

TABLE 47. Q CHANNEL DC OFFSET LSW

TYPE: OUTPUT DATA CONDITIONER, ADDRESS: 0x38		
BIT	**FUNCTION**	**DESCRIPTION**
15:0	DC Q Offset <15:0>	Q DC offset master register containing the lower 16 bits of the Q DC offset.

TABLE 48. STATUS

TYPE: OUTPUT DATA CONDITIONER, ADDRESS: 0x39		
BIT	**FUNCTION**	**DESCRIPTION**
15:4	Reserved	Not used.
3:2	Reserved	Internal use only.
1	I Channel Status	When high indicates that the output data conditioner saturated at least one sample since the last control word 0x30, bit 2 command.
0	Q Channel Status	When high indicates that the output data conditioner saturated at least one sample since the last control word 0x30, bit 2 command.

Plastic Ball Grid Array Packages (BGA)

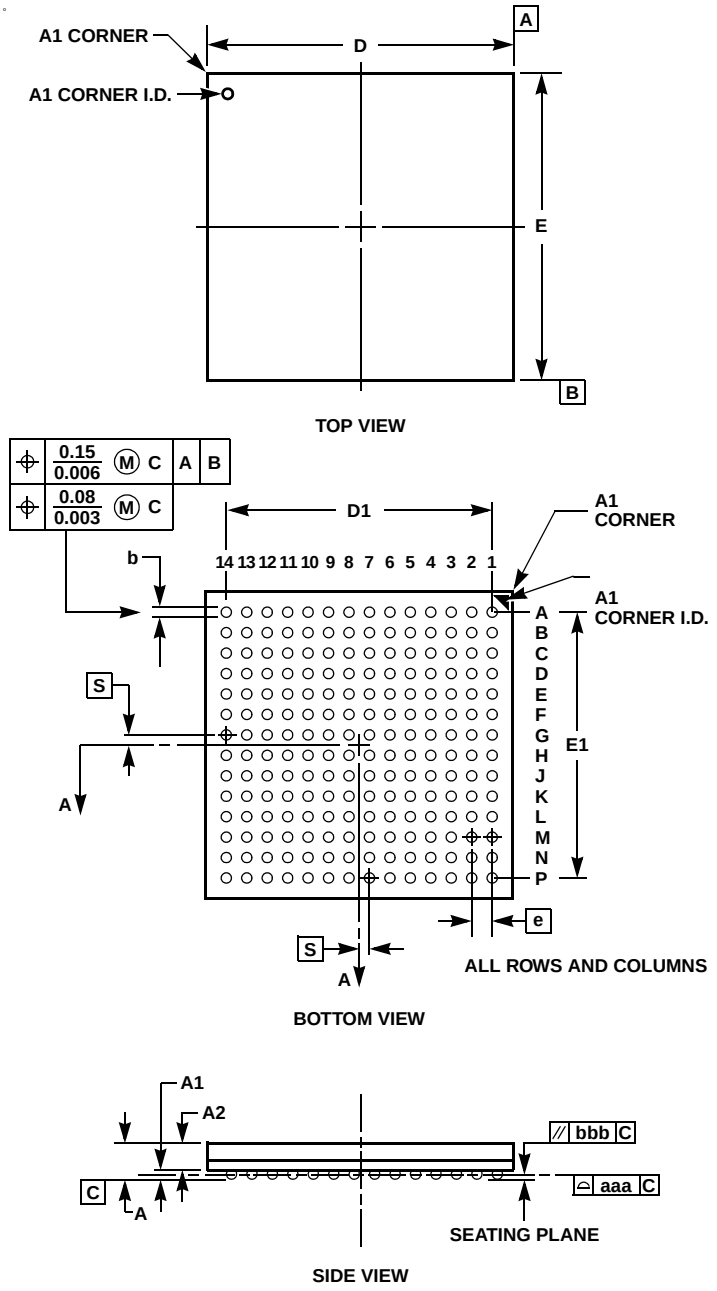

V196.15x15

196 BALL PLASTIC BALL GRID ARRAY PACKAGE

SYMBOL	INCHES		MILLIMETERS		NOTES
	MIN	MAX	MIN	MAX	
A	-	0.059	-	1.50	-
A1	0.012	0.016	0.31	0.41	-
A2	0.037	0.044	0.93	1.11	-
b	0.016	0.020	0.41	0.51	7
D/E	0.587	0.595	14.90	15.10	-
D1/E1	0.508	0.516	12.90	13.10	-
N	196		196		-
e	0.039 BSC		1.0 BSC		-
MD/ME	14 x 14		14 x 14		3
bbb	0.004		0.10		-
aaa	0.005		0.12		-

Rev. 1 12/00

NOTES:

1. Controlling dimension: MILLIMETER. Converted inch dimensions are not necessarily exact.
2. Dimensioning and tolerancing conform to ASME Y14.5M-1994.
3. “MD” and “ME” are the maximum ball matrix size for the “D” and “E” dimensions, respectively.
4. “N” is the maximum number of balls for the specific array size.
5. Primary datum C and seating plane are defined by the spherical crowns of the contact balls.
6. Dimension “A” includes standoff height “A1”, package body thickness and lid or cap height “A2”.
7. Dimension “b” is measured at the maximum ball diameter, parallel to the primary datum C.
8. Pin “A1” is marked on the top and bottom sides adjacent to A1.
9. “S” is measured with respect to datum’s A and B and defines the position of the solder balls nearest to package centerlines. When there is an even number of balls in the outer row the value is “S” = e/2.

All Intersil products are manufactured, assembled and tested utilizing ISO9000 quality systems.
Intersil Corporation’s quality certifications can be viewed at website www.intersil.com/design/quality

Intersil products are sold by description only. Intersil Corporation reserves the right to make changes in circuit design and/or specifications at any time without notice. Accordingly, the reader is cautioned to verify that data sheets are current before placing orders. Information furnished by Intersil is believed to be accurate and reliable. However, no responsibility is assumed by Intersil or its subsidiaries for its use; nor for any infringements of patents or other rights of third parties which may result from its use. No license is granted by implication or otherwise under any patent or patent rights of Intersil or its subsidiaries.

For information regarding Intersil Corporation and its products, see web site **www.intersil.com**