300nA NanoPower Voltage References

ISL21080

The ISL21080 analog voltage references feature low supply voltage operation at ultra-low 310nA typ, 1.5µA max operating current. Additionally, the ISL21080 family features guaranteed initial accuracy as low as ±0.2% and 50ppm/°C temperature coefficient.

These references are ideal for general purpose portable applications to extend battery life at lower cost. The ISL21080 is provided in the industry standard 3 Ld SOT-23 pinout.

The ISL21080 output voltages can be used as precision voltage sources for voltage monitors, control loops, standby voltages for low power states for DSP, FPGA, Datapath Controllers, microcontrollers and other core voltages: 0.9V, 1.024V, 1.25V, 1.5V, 2.048V, 2.5V, 3.0V, 3.3V, 4.096V and 5.0V.

Pin Configuration

ISL21080
(3 LD SOT-23)
TOP VIEW

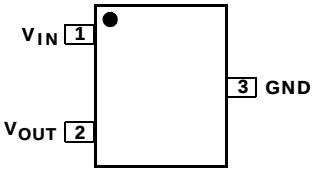

Pin Descriptions

PIN NUMBER	PIN NAME	DESCRIPTION
1	V_{IN}	Input Voltage Connection.
2	V_{OUT}	Voltage Reference Output
3	GND	Ground Connection

Features

- Reference Output Voltage 0.900V, 1.024V, 1.250V, 1.500V, 2.048V, 2.500V, 3.000V, 3.300V, 4.096V, 5.000V
- Initial Accuracy:
  - ISL21080-09 and -10. . . . . ±0.7%
  - ISL21080-12 . . . . . ±0.6%
  - ISL21080-15. . . . . ±0.5%
  - ISL21080-20 and -25. . . . . ±0.3%
  - ISL21080-30, -33, -41, and -50 . . . . . ±0.2%
- Input Voltage Range:
  - ISL21080-09, -10, -12, -15, -20, and -25 . . . . . 2.7V to 5.5V
  - ISL21080-09 (Coming Soon)
  - ISL21080-30. . . . . 3.2V to 5.5V
  - ISL21080-33. . . . . 3.5V to 5.5V
  - ISL21080-41. . . . . 4.5V to 8.0V
  - ISL21080-50. . . . . 5.5V to 8.0V
- Output Voltage Noise . . . 30µV_{P-P} (0.1Hz to 10Hz)
- Supply Current. . . . . 1.5µA (Max)
- Tempco . . . . . 50ppm/°C
- Output Current Capability . . . . . ±7mA
- Operating Temperature Range . . . -40°C to +85°C
- Package . . . . . .3 Ld SOT-23
- Pb-Free (RoHS compliant)

Applications

- Energy Harvesting Applications
- Wireless Sensor Network Applications
- Low Power Voltage Sources for Controllers, FPGA, ASICs or Logic Devices
- Battery Management/Monitoring
- Low Power Standby Voltages
- Portable Instrumentation
- Consumer/Medical Electronics
- Wearable Electronics
- Lower Cost Industrial and Instrumentation
- Power Regulation Circuits
- Control Loops and Compensation Networks
- LED/Diode Supply

CAUTION: These devices are sensitive to electrostatic discharge; follow proper IC Handling Procedures.
1-888-INTERSIL or 1-888-468-3774 | Intersil (and design) is a registered trademark of Intersil Americas Inc.
FGA is a trademark of Intersil Corporation. Copyright Intersil Americas Inc. 2009. All Rights Reserved
All other trademarks mentioned are the property of their respective owners.

Ordering Information

PART NUMBER (Notes 1, 2)	PART MARKING	V_{OUT} OPTION (V)	GRADE (%)	TEMP. RANGE (°C)	PACKAGE Tape & Reel (Pb-Free)	PKG. DWG. #
Coming Soon ISL21080DIH309Z-TK	BCLA	0.9	±0.7	-40 to +85	3 Ld SOT-23	P3.064
ISL21080DIH310Z-TK	BCMA	1.024	±0.7	-40 to +85	3 Ld SOT-23	P3.064
ISL21080DIH312Z-TK	BCNA	1.25	±0.6	-40 to +85	3 Ld SOT-23	P3.064
ISL21080CIH315Z-TK	BCDA	1.5	±0.5	-40 to +85	3 Ld SOT-23	P3.064
ISL21080CIH320Z-TK	BCPA	2.048	±0.3	-40 to +85	3 Ld SOT-23	P3.064
ISL21080CIH325Z-TK	BCRA	2.5	±0.3	-40 to +85	3 Ld SOT-23	P3.064
ISL21080CIH330Z-TK	BCSA	3.0	±0.2	-40 to +85	3 Ld SOT-23	P3.064
ISL21080CIH333Z-TK	BCTA	3.3	±0.2	-40 to +85	3 Ld SOT-23	P3.064
ISL21080CIH341Z-TK	BCVA	4.096	±0.2	-40 to +85	3 Ld SOT-23	P3.064
ISL21080CIH350Z-TK	BCWA	5.0	±0.2	-40 to +85	3 Ld SOT-23	P3.064

NOTES:

1. Please refer to TB347 for details on reel specifications.
2. These Intersil Pb-free plastic packaged products employ special Pb-free material sets, molding compounds/die attach materials, and 100% matte tin plate plus anneal (e3 termination finish, which is RoHS compliant and compatible with both SnPb and Pb-free soldering operations). Intersil Pb-free products are MSL classified at Pb-free peak reflow temperatures that meet or exceed the Pb-free requirements of IPC/JEDEC J STD-020.
3. For Moisture Sensitivity Level (MSL), please see device information page for ISL21080. For more information on MSL please see techbrief TB363.

Absolute Maximum Ratings

Max Voltage
- V_{IN} to GND . . . . . -0.5V to +6.5V
- V_{IN} to GND (ISL21080-41 and 50 only . . . . -0.5V to +10V
- V_{OUT} to GND (10s) . . . . . -0.5V to VOUT +1V
- V_{OUT} to GND (10s) (ISL21080-41 and 50 only . . . . . -0.5V to +5.1V

ESD Rating
- Human Body Model 5500V
- Machine Model 500V
- Charged Device Model 2kV

Thermal Information

Thermal Resistance (Typical)	θ_{JA} (°C/W)
3 Ld SOT-23 Package (Note 4)	170

Continuous Power Dissipation (T_A = +85°C) 99mW
Storage Temperature Range . . . . . -65°C to +150°C
Pb-Free Reflow Profile (Note 5) . . . . . .see link below
http://www.intersil.com/pbfree/Pb-FreeReflow.asp

Recommended Operating Conditions

Temperature . . . . . -40°C to +85°C
Supply Voltage . . . . . .2.7V to 5.5V

CAUTION: Do not operate at or near the maximum ratings listed for extended periods of time. Exposure to such conditions may adversely impact product reliability and result in failures not covered by warranty.

NOTES:

4. θ_{JA} is measured with the component mounted on a high effective thermal conductivity test board in free air. See Tech Brief TB379 for details.
5. Post-reflow drift for the ISL21080 devices will range from 100µV to 1.0mV based on experimental results with devices on FR4 double sided boards. The design engineer must take this into account when considering the reference voltage after assembly.
6. Post-assembly x-ray inspection may also lead to permanent changes in device output voltage and should be minimized or avoided. Most inspection equipment will not affect the FGA reference voltage, but if x-ray inspection is required, it is advisable to monitor the reference output voltage to verify excessive shift has not occurred.

Electrical Specifications

(ISL21080-09, V_{OUT} = 0.9V) V_{IN} = 3.0V, T_A = -40°C to +85°C, I_{OUT} = 0, unless otherwise specified.

PARAMETER	DESCRIPTION	CONDITIONS	MIN	TYP	MAX	UNIT
V_{OUT}	Output Voltage			0.9		V
V_{OA}	V_{OUT} Accuracy @ T_A = +25°C (Notes 5, 6)		-0.7		+0.7	%
TC V_{OUT}	Output Voltage Temperature Coefficient (Note 7)				50	ppm/°C
V_{IN}	Input Voltage Range		2.7		5.5	V
I_{IN}	Supply Current			0.31	1.5	µA
ΔV_{OUT} /ΔV_{IN}	Line Regulation	2.7 V ≤ V_{IN} ≤ 5.5V		80	350	µV/V
$\Delta V_{OUT}/\Delta I_{OUT}$	Load Regulation	Sourcing: 0mA ≤ I_{OUT} ≤ 7mA		25	100	µV/mA
		Sinking: -7mA ≤ I_{OUT} ≤ 0mA		50	350	µV/mA
I_{SC}	Short Circuit Current	T_A = +25°C, V_{OUT} tied to GND		50		mA
t_R	Turn-on Settling Time	V_{OUT} = ±0.1% with no load		4		ms
	Ripple Rejection	f = 120Hz		-30		dB
e_N	Output Voltage Noise	0.1Hz ≤ f ≤ 10Hz		30		μV_{P-P}
V_N	Broadband Voltage Noise	10Hz ≤ f ≤ 1kHz		52		μV_{RMS}
	Noise Density	f = 1kHz		1.1		$\mu V/\sqrt{Hz}$
$\Delta V_{OUT}/\Delta T_A$	Thermal Hysteresis (Note 8)	ΔT_A = +165°C		100		ppm
$\Delta V_{OUT}/\Delta t$	Long Term Stability (Note 9)	T_A = +25°C		50		ppm

Electrical Specifications

(ISL21080-10, V_{OUT} = 1.024V) V_{IN} = 3.0V, T_A = -40°C to +85°C, I_{OUT} = 0, unless otherwise specified.

PARAMETER	DESCRIPTION	CONDITIONS	MIN	TYP	MAX	UNIT
V_{OUT}	Output Voltage			1.024		V
V_{OA}	V_{OUT} Accuracy @ T_A = +25°C (Notes 5, 6)		-0.7		+0.7	%

Electrical Specifications (ISL21080-10, V_{OUT} = 1.024V) V_{IN} = 3.0V, T_A = -40°C to +85°C, I_{OUT} = 0, unless otherwise specified. **(Continued)**

PARAMETER	DESCRIPTION	CONDITIONS	MIN	TYP	MAX	UNIT
TC V_{OUT}	Output Voltage Temperature Coefficient (Note 7)				50	ppm/°C
V_{IN}	Input Voltage Range		2.7		5.5	V
I_{IN}	Supply Current			0.31	1.5	µA
ΔV_{OUT} /ΔV_{IN}	Line Regulation	2.7 V ≤ V_{IN} ≤ 5.5V		80	350	µV/V
$\Delta V_{OUT}/\Delta I_{OUT}$	Load Regulation	Sourcing: 0mA ≤ I_{OUT} ≤ 7mA		25	100	µV/mA
		Sinking: -7mA ≤ I_{OUT} ≤ 0mA		50	350	µV/mA
I_{SC}	Short Circuit Current	T_A = +25°C, V_{OUT} tied to GND		50		mA
t_R	Turn-on Settling Time	V_{OUT} = ±0.1% with no load		4		ms
	Ripple Rejection	f = 120Hz		-30		dB
e_N	Output Voltage Noise	0.1Hz ≤ f ≤ 10Hz		30		μV_{P-P}
V_N	Broadband Voltage Noise	10Hz ≤ f ≤ 1kHz		52		μV_{RMS}
	Noise Density	f = 1kHz		1.1		$\mu V/\sqrt{Hz}$
$\Delta V_{OUT}/\Delta T_A$	Thermal Hysteresis (Note 8)	ΔT_A = +165°C		100		ppm
$\Delta V_{OUT}/\Delta t$	Long Term Stability (Note 9)	T_A = +25°C		50		ppm

Electrical Specifications (ISL21080-12, V_{OUT} = 1.25V) V_{IN} = 3.0V, T_A = -40°C to +85°C, I_{OUT} = 0, unless otherwise specified.

PARAMETER	DESCRIPTION	CONDITIONS	MIN	TYP	MAX	UNIT
V_{OUT}	Output Voltage			1.25		V
V_{OA}	V_{OUT} Accuracy @ T_A = +25°C (Notes 5, 6)		-0.6		+0.6	%
TC V_{OUT}	Output Voltage Temperature Coefficient (Note 7)				50	ppm/°C
V_{IN}	Input Voltage Range		2.7		5.5	V
I_{IN}	Supply Current			0.31	1.5	µA
ΔV_{OUT} /ΔV_{IN}	Line Regulation	2.7 V ≤ V_{IN} ≤ 5.5V		80	350	µV/V
$\Delta V_{OUT}/\Delta I_{OUT}$	Load Regulation	Sourcing: 0mA ≤ I_{OUT} ≤ 7mA		25	100	µV/mA
		Sinking: -7mA ≤ I_{OUT} ≤ 0mA		50	350	µV/mA
I_{SC}	Short Circuit Current	T_A = +25°C, V_{OUT} tied to GND		50		mA
t_R	Turn-on Settling Time	V_{OUT} = ±0.1% with no load		4		ms
	Ripple Rejection	f = 120Hz		-30		dB
e_N	Output Voltage Noise	0.1Hz ≤ f ≤ 10Hz		30		μV_{P-P}
V_N	Broadband Voltage Noise	10Hz ≤ f ≤ 1kHz		52		μV_{RMS}
	Noise Density	f = 1kHz		1.1		$\mu V/\sqrt{Hz}$
$\Delta V_{OUT}/\Delta T_A$	Thermal Hysteresis (Note 8)	ΔT_A = +165°C		100		ppm
$\Delta V_{OUT}/\Delta t$	Long Term Stability (Note 9)	T_A = +25°C		50		ppm

Electrical Specifications (ISL21080-15, V_{OUT} = 1.5V) V_{IN} = 3.0V, T_A = -40°C to +85°C, I_{OUT} = 0, unless otherwise specified.

PARAMETER	DESCRIPTION	CONDITIONS	MIN	TYP	MAX	UNIT
V_{OUT}	Output Voltage			1.5		V
V_{OA}	V_{OUT} Accuracy @ T_A = +25°C (Notes 5, 6)		-0.5		+0.5	%

Electrical Specifications (ISL21080-15, V_{OUT} = 1.5V) V_{IN} = 3.0V, T_A = -40°C to +85°C, I_{OUT} = 0, unless otherwise specified. **(Continued)**

PARAMETER	DESCRIPTION	CONDITIONS	MIN	TYP	MAX	UNIT
TC V_{OUT}	Output Voltage Temperature Coefficient (Note 7)				50	ppm/°C
V_{IN}	Input Voltage Range		2.7		5.5	V
I_{IN}	Supply Current			0.31	1.5	µA
ΔV_{OUT} /ΔV_{IN}	Line Regulation	2.7 V ≤ V_{IN} ≤ 5.5V		80	350	µV/V
$\Delta V_{OUT}/\Delta I_{OUT}$	Load Regulation	Sourcing: 0mA ≤ I_{OUT} ≤ 7mA		10	100	µV/mA
		Sinking: -7mA ≤ I_{OUT} ≤ 0mA		50	350	µV/mA
I_{SC}	Short Circuit Current	T_A = +25°C, V_{OUT} tied to GND		50		mA
t_R	Turn-on Settling Time	V_{OUT} = ±0.1% with no load		4		ms
	Ripple Rejection	f = 120Hz		-30		dB
e_N	Output Voltage Noise	0.1Hz ≤ f ≤ 10Hz		30		μV_{P-P}
V_N	Broadband Voltage Noise	10Hz ≤ f ≤ 1kHz		52		μV_{RMS}
	Noise Density	f = 1kHz		1.1		$\mu V/\sqrt{Hz}$
$\Delta V_{OUT}/\Delta T_A$	Thermal Hysteresis (Note 8)	ΔT_A = +165°C		100		ppm
$\Delta V_{OUT}/\Delta t$	Long Term Stability (Note 9)	T_A = +25°C		50		ppm

Electrical Specifications (ISL21080-20, V_{OUT} = 2.048V) V_{IN} = 3.0V, T_A = -40°C to +85°C, I_{OUT} = 0, unless otherwise specified.

PARAMETER	DESCRIPTION	CONDITIONS	MIN	TYP	MAX	UNIT
V_{OUT}	Output Voltage			2.048		V
V_{OA}	V_{OUT} Accuracy @ T_A = +25°C (Notes 5, 6)		-0.3		+0.3	%
TC V_{OUT}	Output Voltage Temperature Coefficient (Note 7)				50	ppm/°C
V_{IN}	Input Voltage Range		2.7		5.5	V
I_{IN}	Supply Current			0.31	1.5	µA
ΔV_{OUT} /ΔV_{IN}	Line Regulation	2.7 V ≤ V_{IN} ≤ 5.5V		80	350	µV/V
$\Delta V_{OUT}/\Delta I_{OUT}$	Load Regulation	Sourcing: 0mA ≤ I_{OUT} ≤ 7mA		25	100	µV/mA
		Sinking: -7mA ≤ I_{OUT} ≤ 0mA		50	350	µV/mA
I_{SC}	Short Circuit Current	T_A = +25°C, V_{OUT} tied to GND		50		mA
t_R	Turn-on Settling Time	V_{OUT} = ±0.1% with no load		4		ms
	Ripple Rejection	f = 120Hz		-30		dB
e_N	Output Voltage Noise	0.1Hz ≤ f ≤ 10Hz		30		μV_{P-P}
V_N	Broadband Voltage Noise	10Hz ≤ f ≤ 1kHz		52		μV_{RMS}
	Noise Density	f = 1kHz		1.1		$\mu V/\sqrt{Hz}$
$\Delta V_{OUT}/\Delta T_A$	Thermal Hysteresis (Note 8)	ΔT_A = +165°C		100		ppm
$\Delta V_{OUT}/\Delta t$	Long Term Stability (Note 9)	T_A = +25°C		50		ppm

Electrical Specifications (ISL21080-25, V_{OUT} = 2.5V) V_{IN} = 3.0V, T_A = -40°C to +85°C, I_{OUT} = 0, unless otherwise specified.

PARAMETER	DESCRIPTION	CONDITIONS	MIN	TYP	MAX	UNIT
V_{OUT}	Output Voltage			2.5		V
V_{OA}	V_{OUT} Accuracy @ T_A = +25°C (Notes 5, 6)		-0.3		+0.3	%

Electrical Specifications (ISL21080-25, V_{OUT} = 2.5V) V_{IN} = 3.0V, T_A = -40°C to +85°C, I_{OUT} = 0, unless otherwise specified. **(Continued)**

PARAMETER	DESCRIPTION	CONDITIONS	MIN	TYP	MAX	UNIT
TC V_{OUT}	Output Voltage Temperature Coefficient (Note 7)				50	ppm/°C
V_{IN}	Input Voltage Range		2.7		5.5	V
I_{IN}	Supply Current			0.31	1.5	µA
ΔV_{OUT} /ΔV_{IN}	Line Regulation	2.7 V ≤ V_{IN} ≤ 5.5V		80	350	µV/V
$\Delta V_{OUT}/\Delta I_{OUT}$	Load Regulation	Sourcing: 0mA ≤ I_{OUT} ≤ 7mA		25	100	µV/mA
		Sinking: -7mA ≤ I_{OUT} ≤ 0mA		50	350	µV/mA
I_{SC}	Short Circuit Current	T_A = +25°C, V_{OUT} tied to GND		50		mA
t_R	Turn-on Settling Time	V_{OUT} = ±0.1% with no load		4		ms
	Ripple Rejection	f = 120Hz		-30		dB
e_N	Output Voltage Noise	0.1Hz ≤ f ≤ 10Hz		30		μV_{P-P}
V_N	Broadband Voltage Noise	10Hz ≤ f ≤ 1kHz		52		μV_{RMS}
	Noise Density	f = 1kHz		1.1		$\mu V/\sqrt{Hz}$
$\Delta V_{OUT}/\Delta T_A$	Thermal Hysteresis (Note 8)	ΔT_A = +165°C		100		ppm
$\Delta V_{OUT}/\Delta t$	Long Term Stability (Note 9)	T_A = +25°C		50		ppm

Electrical Specifications (ISL21080-30, V_{OUT} = 3.0V) V_{IN} = 5.0V, T_A = -40°C to +85°C, I_{OUT} = 0, unless otherwise specified.

PARAMETER	DESCRIPTION	CONDITIONS	MIN	TYP	MAX	UNIT
V_{OUT}	Output Voltage			3.0		V
V_{OA}	V_{OUT} Accuracy @ T_A = +25°C (Notes 5, 6)		-0.2		+0.2	%
TC V_{OUT}	Output Voltage Temperature Coefficient (Note 7)				50	ppm/°C
V_{IN}	Input Voltage Range		3.2		5.5	V
I_{IN}	Supply Current			0.31	1.5	µA
ΔV_{OUT} /ΔV_{IN}	Line Regulation	3.2 V ≤ V_{IN} ≤ 5.5V		80	350	µV/V
$\Delta V_{OUT}/\Delta I_{OUT}$	Load Regulation	Sourcing: 0mA ≤ I_{OUT} ≤ 7mA		25	100	µV/mA
		Sinking: -7mA ≤ I_{OUT} ≤ 0mA		50	350	µV/mA
I_{SC}	Short Circuit Current	T_A = +25°C, V_{OUT} tied to GND		50		mA
t_R	Turn-on Settling Time	V_{OUT} = ±0.1% with no load		4		ms
	Ripple Rejection	f = 120Hz		-30		dB
e_N	Output Voltage Noise	0.1Hz ≤ f ≤ 10Hz		30		μV_{P-P}
V_N	Broadband Voltage Noise	10Hz ≤ f ≤ 1kHz		52		μV_{RMS}
	Noise Density	f = 1kHz		1.1		$\mu V/\sqrt{Hz}$
$\Delta V_{OUT}/\Delta T_A$	Thermal Hysteresis (Note 8)	ΔT_A = +165°C		100		ppm
$\Delta V_{OUT}/\Delta t$	Long Term Stability (Note 9)	T_A = +25°C		50		ppm

Electrical Specifications (ISL21080-33, V_{OUT} = 3.3V) V_{IN} = 5.0V, T_A = -40°C to +85°C, I_{OUT} = 0, unless otherwise specified.

PARAMETER	DESCRIPTION	CONDITIONS	MIN	TYP	MAX	UNIT
V_{OUT}	Output Voltage			3.3		V
V_{OA}	V_{OUT} Accuracy @ T_A = +25°C (Note 5, 6)		-0.2		+0.2	%

Electrical Specifications (ISL21080-33, V_{OUT} = 3.3V) V_{IN} = 5.0V, T_A = -40°C to +85°C, I_{OUT} = 0, unless otherwise specified. **(Continued)**

PARAMETER	DESCRIPTION	CONDITIONS	MIN	TYP	MAX	UNIT
TC V_{OUT}	Output Voltage Temperature Coefficient (Note 7)				50	ppm/°C
V_{IN}	Input Voltage Range		3.5		5.5	V
I_{IN}	Supply Current			0.31	1.5	µA
ΔV_{OUT} /ΔV_{IN}	Line Regulation	3.5 V ≤ V_{IN} ≤ 5.5V		80	350	µV/V
$\Delta V_{OUT}/\Delta I_{OUT}$	Load Regulation	Sourcing: 0mA ≤ I_{OUT} ≤ 10mA		25	100	µV/mA
		Sinking: -10mA ≤ I_{OUT} ≤ 0mA		50	350	µV/mA
I_{SC}	Short Circuit Current	T_A = +25°C, V_{OUT} tied to GND		50		mA
t_R	Turn-on Settling Time	V_{OUT} = ±0.1% with no load		4		ms
	Ripple Rejection	f = 120Hz		-30		dB
e_N	Output Voltage Noise	0.1Hz ≤ f ≤ 10Hz		30		μV_{P-P}
V_N	Broadband Voltage Noise	10Hz ≤ f ≤ 1kHz		52		μV_{RMS}
	Noise Density	f = 1kHz		1.1		$\mu V/\sqrt{Hz}$
$\Delta V_{OUT}/\Delta T_A$	Thermal Hysteresis (Note 8)	ΔT_A = +165°C		100		ppm
$\Delta V_{OUT}/\Delta t$	Long Term Stability (Note 9)	T_A = +25°C		50		ppm

Electrical Specifications (ISL21080-41 V_{OUT} = 4.096V) V_{IN} = 5.0V, T_A = -40°C to +85°C, I_{OUT} = 0, unless otherwise specified.

PARAMETER	DESCRIPTION	CONDITIONS	MIN	TYP	MAX	UNIT
V_{OUT}	Output Voltage			4.096		V
V_{OA}	V_{OUT} Accuracy @ T_A = +25°C (Note 5, 6)		-0.2		+0.2	%
TC V_{OUT}	Output Voltage Temperature Coefficient (Note 7)				50	ppm/°C
V_{IN}	Input Voltage Range		4.5		8.0	V
I_{IN}	Supply Current			0.5	1.5	µA
ΔV_{OUT} /ΔV_{IN}	Line Regulation	4.5 V ≤ V_{IN} ≤ 8.0V		80	350	µV/V
$\Delta V_{OUT}/\Delta I_{OUT}$	Load Regulation	Sourcing: 0mA ≤ I_{OUT} ≤ 10mA		10	100	µV/mA
		Sinking: -10mA ≤ I_{OUT} ≤ 0mA		20	350	µV/mA
I_{SC}	Short Circuit Current	T_A = +25°C, V_{OUT} tied to GND		80		mA
t_R	Turn-on Settling Time	V_{OUT} = ±0.1% with no load		4		ms
	Ripple Rejection	f = 120Hz		-30		dB
e_N	Output Voltage Noise	0.1Hz ≤ f ≤ 10Hz		30		μV_{P-P}
V_N	Broadband Voltage Noise	10Hz ≤ f ≤ 1kHz		52		μV_{RMS}
	Noise Density	f = 1kHz		1.1		$\mu V/\sqrt{Hz}$
$\Delta V_{OUT}/\Delta T_A$	Thermal Hysteresis (Note 8)	ΔT_A = +165°C		100		ppm
$\Delta V_{OUT}/\Delta t$	Long Term Stability (Note 9)	T_A = +25°C		50		ppm

Electrical Specifications (ISL21080-50 V_{OUT} = 5.0V) V_{IN} = 6.5V, T_A = -40°C to +85°C, I_{OUT} = 0, unless otherwise specified.

PARAMETER	DESCRIPTION	CONDITIONS	MIN	TYP	MAX	UNIT
V_{OUT}	Output Voltage			5.0		V
V_{OA}	V_{OUT} Accuracy @ T_A = +25°C (Note 5, 6)		-0.2		+0.2	%

Electrical Specifications (ISL21080-50 V_{OUT} = 5.0V) V_{IN} = 6.5V, T_A = -40°C to +85°C, I_{OUT} = 0, unless otherwise specified. **(Continued)**

PARAMETER	DESCRIPTION	CONDITIONS	MIN	TYP	MAX	UNIT
TC V_{OUT}	Output Voltage Temperature Coefficient (Note 7)				50	ppm/°C
V_{IN}	Input Voltage Range		5.5		8.0	V
I_{IN}	Supply Current			0.5	1.5	µA
ΔV_{OUT} / ΔV_{IN}	Line Regulation	5.5 V ≤ V_{IN} ≤ 8.0V		80	350	µV/V
$\Delta V_{OUT}/\Delta I_{OUT}$	Load Regulation	Sourcing: 0mA ≤ I_{OUT} ≤ 10mA		10	100	µV/mA
		Sinking: -10mA ≤ I_{OUT} ≤ 0mA		20	350	µV/mA
I_{SC}	Short Circuit Current	T_A = +25°C, V_{OUT} tied to GND		80		mA
t_R	Turn-on Settling Time	V_{OUT} = ±0.1% with no load		4		ms
	Ripple Rejection	f = 120Hz		-30		dB
e_N	Output Voltage Noise	0.1Hz ≤ f ≤ 10Hz		30		μV_{P-P}
V_N	Broadband Voltage Noise	10Hz ≤ f ≤ 1kHz		52		μV_{RMS}
	Noise Density	f = 1kHz		1.1		$\mu V/\sqrt{Hz}$
$\Delta V_{OUT}/\Delta T_A$	Thermal Hysteresis (Note 8)	ΔT_A = +165°C		100		ppm
$\Delta V_{OUT}/\Delta t$	Long Term Stability (Note 9)	T_A = +25°C		50		ppm

NOTES:

7. Over the specified temperature range. Temperature coefficient is measured by the box method whereby the change in V_{OUT} is divided by the temperature range; in this case, -40°C to +85°C = +125°C.
8. Thermal Hysteresis is the change of V_{OUT} measured @ T_A = +25°C after temperature cycling over a specified range, ΔT_A. V_{OUT} is read initially at T_A = +25°C for the device under test. The device is temperature cycled and a second V_{OUT} measurement is taken at +25°C. The difference between the initial V_{OUT} reading and the second V_{OUT} reading is then expressed in ppm. For Δ T_A = +125°C, the device under test is cycled from +25°C to +85°C to -40°C to +25°C.
9. Long term drift is logarithmic in nature and diminishes over time. Drift after the first 1000 hours will be approximately 10ppm/$\sqrt{1khrs}$

Typical Performance Characteristics Curves

V_{OUT} = 1.5V, V_{IN} = 3.0V, I_{OUT} = 0mA, T_A = +25°C unless otherwise specified.

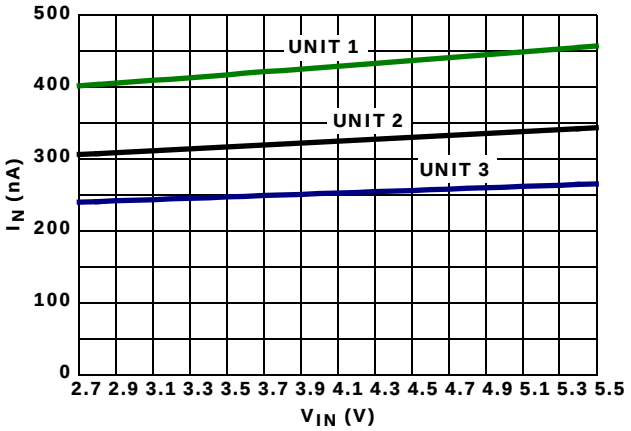

FIGURE 1. I_{IN} vs V_{IN}, 3 UNITS

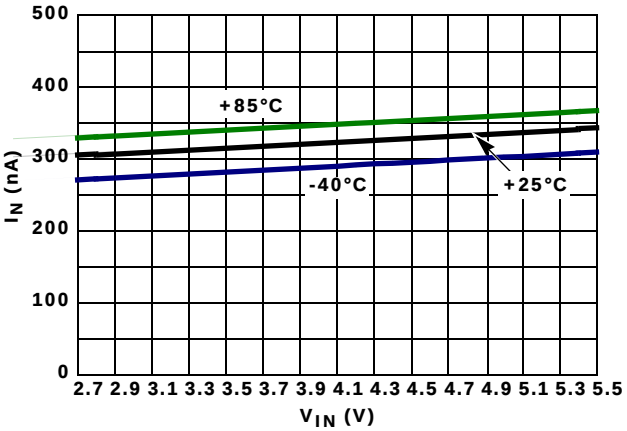

FIGURE 2. I_{IN} vs V_{IN} OVER-TEMPERATURE

Typical Performance Characteristics Curves

V_{OUT} = 1.5V, V_{IN} = 3.0V, I_{OUT} = 0mA, T_A = +25°C unless otherwise specified.

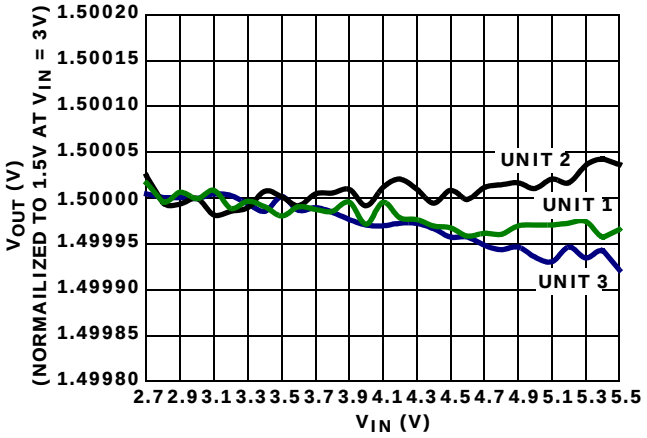

FIGURE 3. LINE REGULATION, 3 UNITS

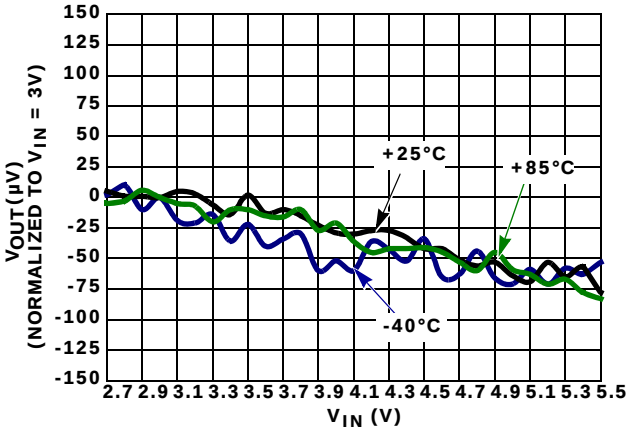

FIGURE 4. LINE REGULATION OVER-TEMPERATURE

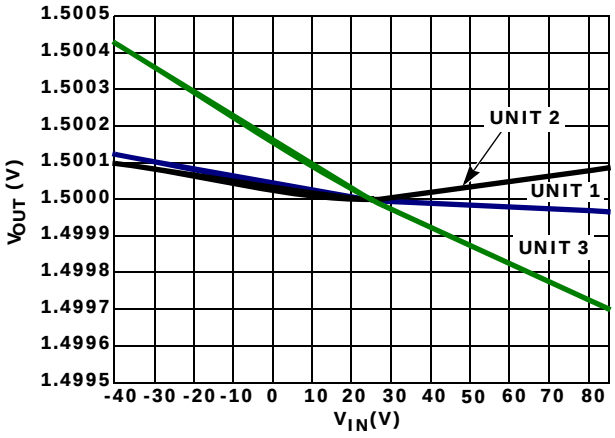

FIGURE 5. V_{OUT} vs TEMPERATURE NORMALIZED to +25°C

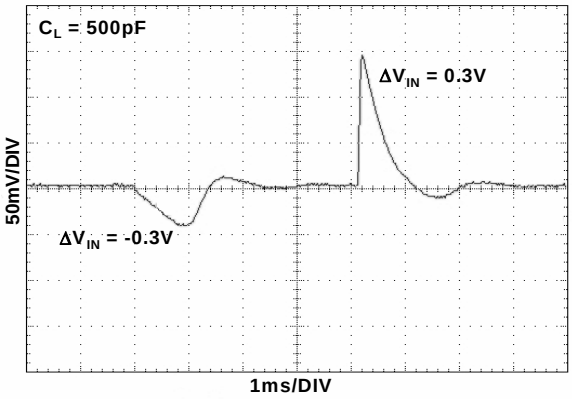

FIGURE 6. LINE TRANSIENT RESPONSE, WITH CAPACITIVE LOAD

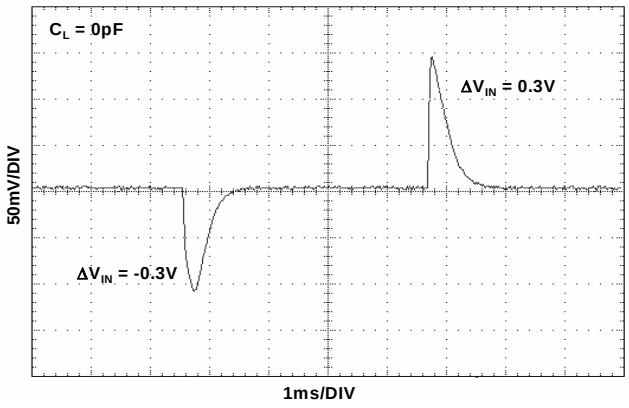

FIGURE 7. LINE TRANSIENT RESPONSE

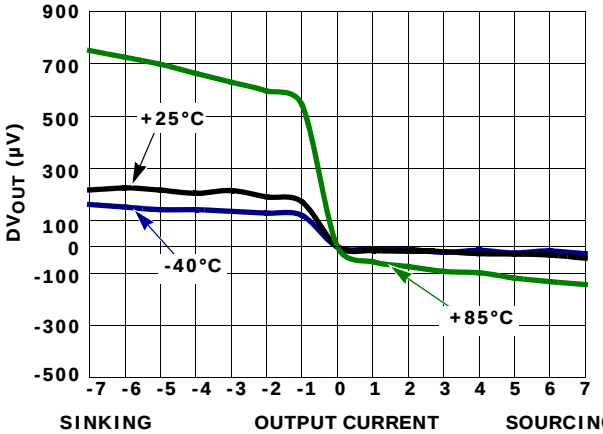

FIGURE 8. LOAD REGULATION OVER-TEMPERATURE

Typical Performance Characteristics Curves

V_{OUT} = 1.5V, V_{IN} = 3.0V, I_{OUT} = 0mA, T_A = +25°C unless otherwise specified.

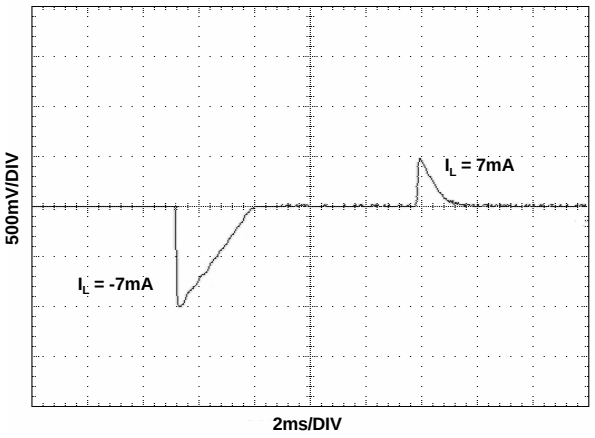

FIGURE 9. LOAD TRANSIENT RESPONSE

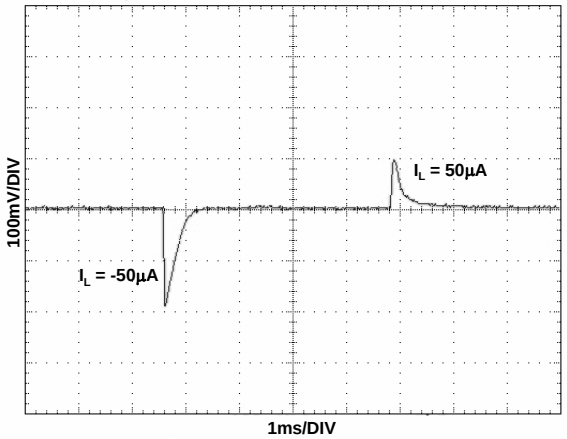

FIGURE 10. LOAD TRANSIENT RESPONSE

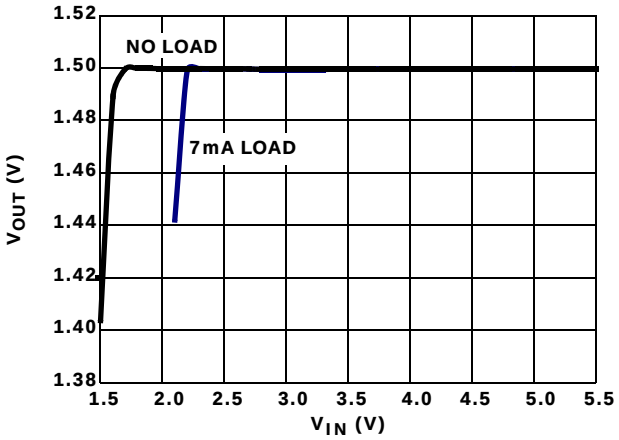

FIGURE 11. DROPOUT

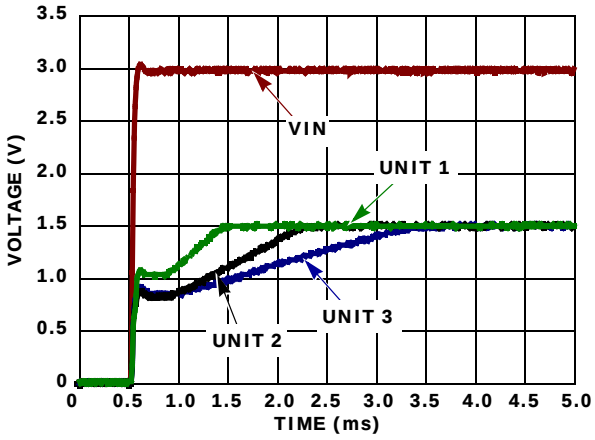

FIGURE 12. TURN-ON TIME

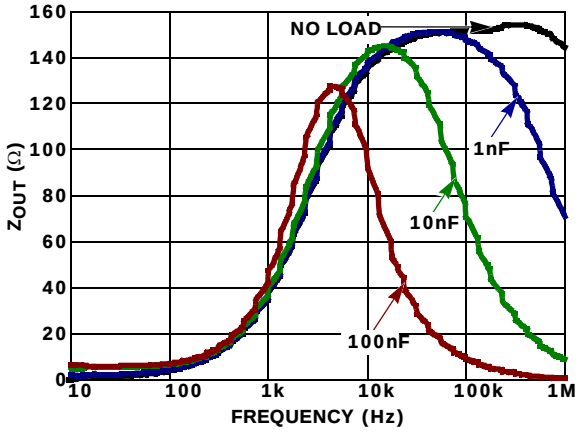

FIGURE 13. Z_{OUT} vs FREQUENCY

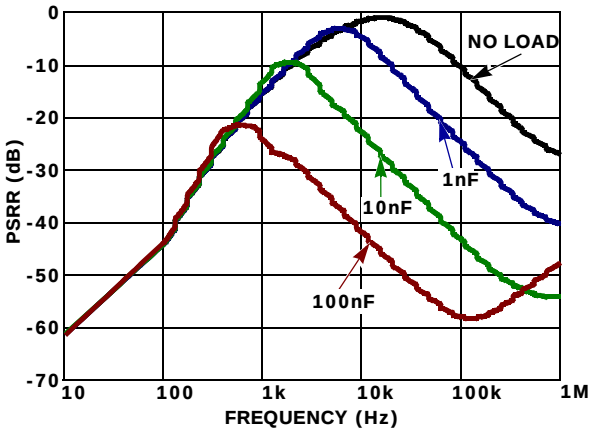

FIGURE 14. PSRR vs FREQUENCY

High Current Application

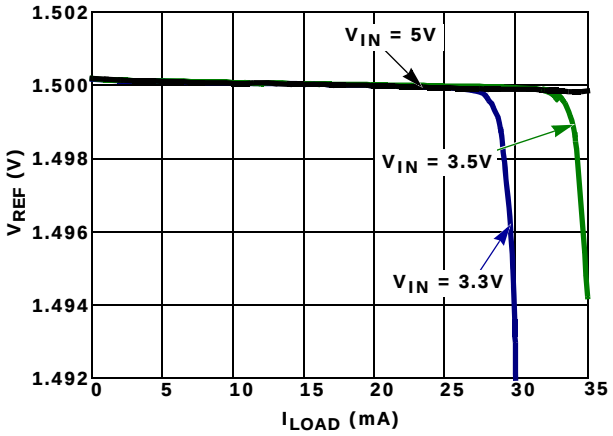

FIGURE 15. DIFFERENT V_{IN} AT ROOM TEMPERATURE

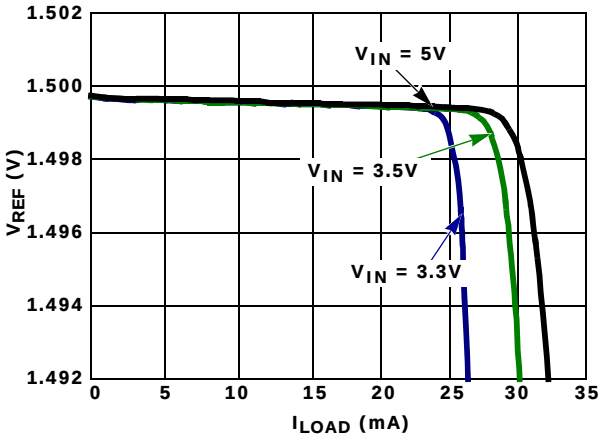

FIGURE 16. DIFFERENT V_{IN} AT HIGH TEMPERATURE (+85°C)

Applications Information

FGA Technology

The ISL21080 series of voltage references use the floating gate technology to create references with very low drift and supply current. Essentially, the charge stored on a floating gate cell is set precisely in manufacturing. The reference voltage output itself is a buffered version of the floating gate voltage. The resulting reference device has excellent characteristics which are unique in the industry: very low temperature drift, high initial accuracy, and almost zero supply current. Also, the reference voltage itself is not limited by voltage bandgaps or zener settings, so a wide range of reference voltages can be programmed (standard voltage settings are provided, but customer-specific voltages are available).

The process used for these reference devices is a floating gate CMOS process, and the amplifier circuitry uses CMOS transistors for amplifier and output transistor circuitry. While providing excellent accuracy, there are limitations in output noise level and load regulation due to the MOS device characteristics. These limitations are addressed with circuit techniques discussed in other sections.

Nanopower Operation

Reference devices achieve their highest accuracy when powered up continuously, and after initial stabilization has taken place. This drift can be eliminated by leaving the power on continuously.

The ISL21080 is the first high precision voltage reference with ultra low power consumption that makes it possible to leave power on continuously in battery operated circuits. The ISL21080 consumes extremely low supply current due to the proprietary FGA technology. Supply current at room temperature is typically 350nA, which is 1 to 2 orders of magnitude lower than competitive devices. Application circuits using battery power will benefit greatly from having an accurate, stable reference, which essentially presents no load to the battery.

In particular, battery powered data converter circuits that would normally require the entire circuit to be disabled when not in use can remain powered up between conversions as shown in Figure 17. Data acquisition circuits providing 12 bits to 24 bits of accuracy can operate with the reference device continuously biased with no power penalty, providing the highest accuracy and lowest possible long term drift.

Other reference devices consuming higher supply currents will need to be disabled in between conversions to conserve battery capacity. Absolute accuracy will suffer as the device is biased and requires time to settle to its final value, or, may not actually settle to a final value as power on time may be short. Table 1 shows an example of battery life in years for ISL21080 in various power on condition with 1.5µA maximum current consumption.

TABLE 1. EXAMPLE OF BATTERY LIFE IN YEARS FOR ISL21080 IN VARIOUS POWER ON CONDITIONS WITH 1.5µA MAX CURRENT

BATTERY RATING (mAH)	CONTINUOUS	50% DUTY CYCLE	10% DUTY CYCLE
40	3	6	30*
225	16.3*	32.6*	163*

NOTE: *Typical Li-ion battery has a shelf life of up to 10 years.

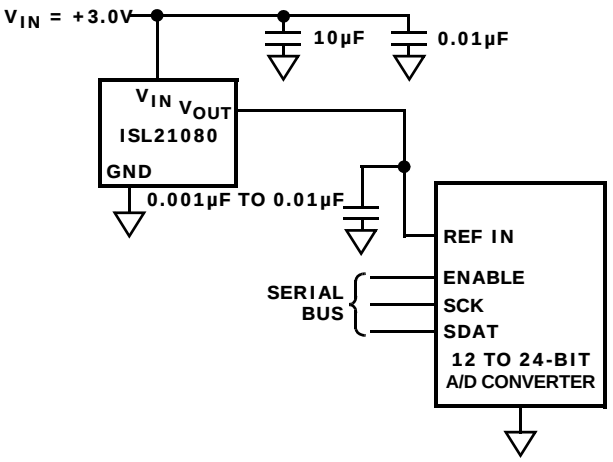

FIGURE 17. REFERENCE INPUT FOR ADC CONVERTER

ISL21080 Used as a Low Cost Precision Current Source

Using an N-JET and a Nanopower voltage reference, ISL21080, a precision, low cost, high impedance current source can be created. The precision of the current source is largely dependent on the tempco and accuracy of the reference. The current setting resistor contributes less than 20% of the error.

Board Mounting Considerations

For applications requiring the highest accuracy, board mounting location should be reviewed. Placing the device in areas subject to slight twisting can cause degradation of the accuracy of the reference voltage due to die stresses. It is normally best to place the device near the edge of a board, or the shortest side, as the axis of bending is most limited at that location. Obviously, mounting the device on flexprint or extremely thin PC material will likewise cause loss of reference accuracy.

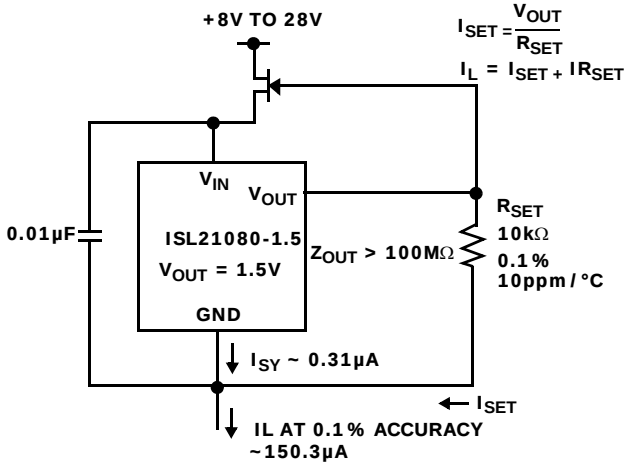

FIGURE 18. ISL21080 USED AS A LOW COST PRECISION CURRENT SOURCE

Board Assembly Considerations

FGA references provide high accuracy and low temperature drift but some PC board assembly precautions are necessary. Normal Output voltage shifts of 100µV to 1mV can be expected with Pb-free reflow profiles or wave solder on multi-layer FR4 PC boards. Precautions should be taken to avoid excessive heat or extended exposure to high reflow or wave solder temperatures, this may reduce device initial accuracy.

Post-assembly x-ray inspection may also lead to permanent changes in device output voltage and should be minimized or avoided. If x-ray inspection is required, it is advisable to monitor the reference output voltage to verify excessive shift has not occurred. If large amounts of shift are observed, it is best to add an X-ray shield consisting of thin zinc (300µm) sheeting to allow clear imaging, yet block x-ray energy that affects the FGA reference.

Special Applications Considerations

In addition to post-assembly examination, there are also other X-ray sources that may affect the FGA reference long term accuracy. Airport screening machines contain X-rays and will have a cumulative effect on the voltage reference output accuracy. Carry-on luggage screening uses low level X-rays and is not a major source of output voltage shift, however, if a product is expected to pass through that type of screening over 100 times, it may need to consider shielding with copper or aluminum. Checked luggage X-rays are higher intensity and can cause output voltage shift in much fewer passes, thus devices expected to go through those machines should definitely consider shielding. Note that just two layers of 1/2 ounce copper planes will reduce the received dose by over 90%. The leadframe for the device which is on the bottom also provides similar shielding.

If a device is expected to pass through luggage X-ray machines numerous times, it is advised to mount a 2-layer (minimum) PC board on the top, and along with a ground plane underneath will effectively shield it from from 50 to 100 passes through the machine. Since these machines vary in X-ray dose delivered, it is difficult to produce an accurate maximum pass recommendation.

Noise Performance and Reduction

The output noise voltage in a 0.1Hz to 10Hz bandwidth is typically $30\mu V_{P-P}$. This is shown in the plot in the “Typical Performance Characteristics Curves” which begin on page 8. The noise measurement is made with a bandpass filter made of a 1 pole high-pass filter with a corner frequency at 0.1Hz and a 2-pole low-pass filter with a corner frequency at 12.6Hz to create a filter with a 9.9Hz bandwidth. Noise in the 10kHz to 1MHz bandwidth is approximately $400\mu V_{P-P}$ with no capacitance on the output, as shown in Figure 19. These noise measurements are made with a 2 decade bandpass filter made of a 1-pole high-pass filter with a corner frequency at 1/10 of the center frequency and 1-pole low-pass filter with a corner frequency at 10 times the center frequency. Figure 19 also shows the noise in the 10kHz to 1MHz band can be reduced to about $50\mu V_{P-P}$ using a 0.001µF capacitor on the output. Noise in the 1kHz to 100kHz band can be further reduced using a 0.1µF capacitor on the output, but noise in the 1Hz to 100Hz band increases

due to instability of the very low power amplifier with a 0.1µF capacitance load. For load capacitances above 0.001µF, the noise reduction network shown in Figure 20 is recommended. This network reduces noise significantly over the full bandwidth. As shown in Figure 19, noise is reduced to less than $40\mu V_{P-P}$ from 1Hz to 1MHz using this network with a 0.01µF capacitor and a 2kΩ resistor in series with a 10µF capacitor.

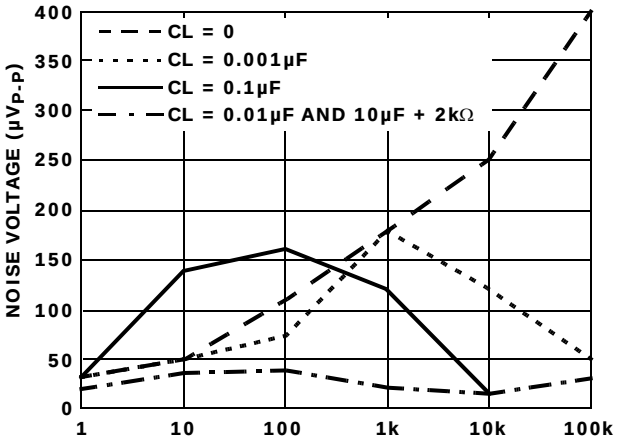

FIGURE 19. NOISE REDUCTION

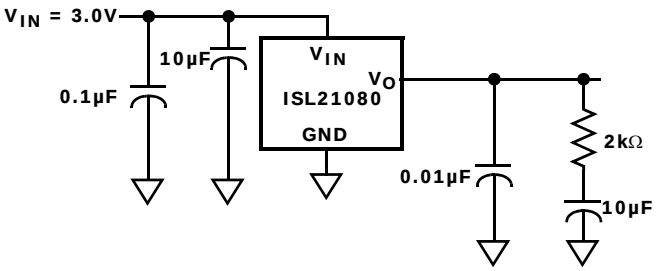

FIGURE 20. NOISE REDUCTION NETWORK

Turn-On Time

The ISL21080 devices have ultra-low supply current and thus, the time to bias-up internal circuitry to final values will be longer than with higher power references. Normal turn-on time is typically 7ms. This is shown in Figure 18. Since devices can vary in supply current down to >300nA, turn-on time can last up to about 12ms. Care should be taken in system design to include this delay before measurements or conversions are started.

Temperature Coefficient

The limits stated for temperature coefficient (tempco) are governed by the method of measurement. The overwhelming standard for specifying the temperature drift of a reference, is to measure the reference voltage at two temperatures, take the total variation, (V_{HIGH} - V_{LOW}), and divide by the temperature extremes of measurement ($T_{HIGH} - T_{LOW}$). The result is divided by the nominal reference voltage (at T = +25°C) and multiplied by 10^6 to yield ppm/°C. This is the "Box" method for specifying temperature coefficient.

Typical Application Circuits

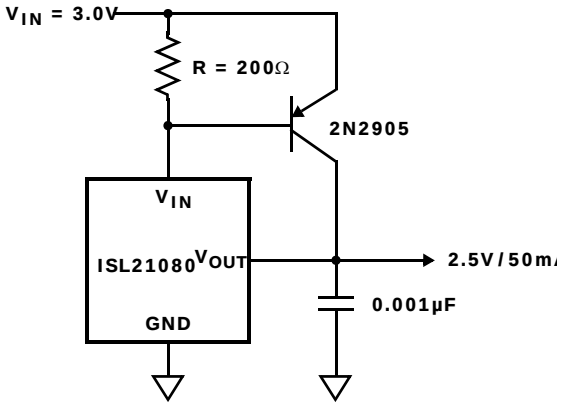

FIGURE 21. PRECISION 2.5V 50mA REFERENCE

Typical Application Circuits (Continued)

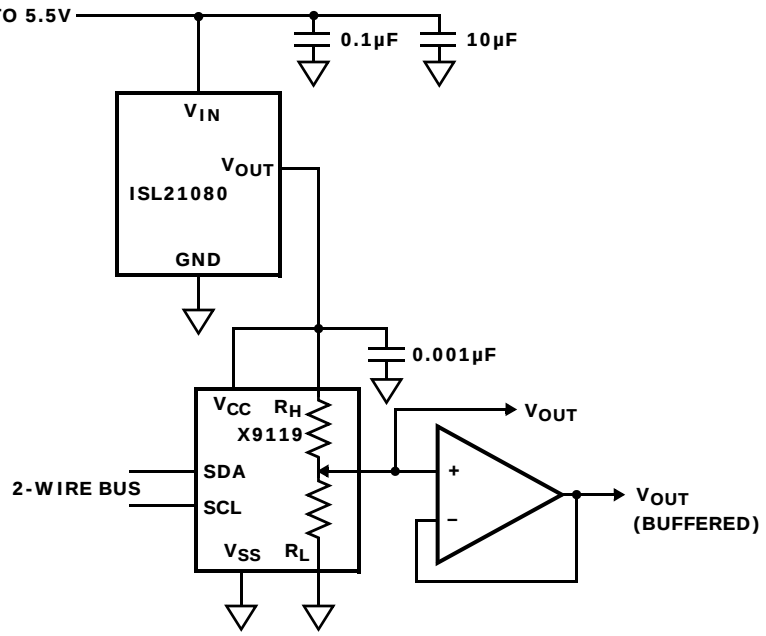

FIGURE 22. 2.5V FULL SCALE LOW-DRIFT 10-BIT ADJUSTABLE VOLTAGE SOURCE

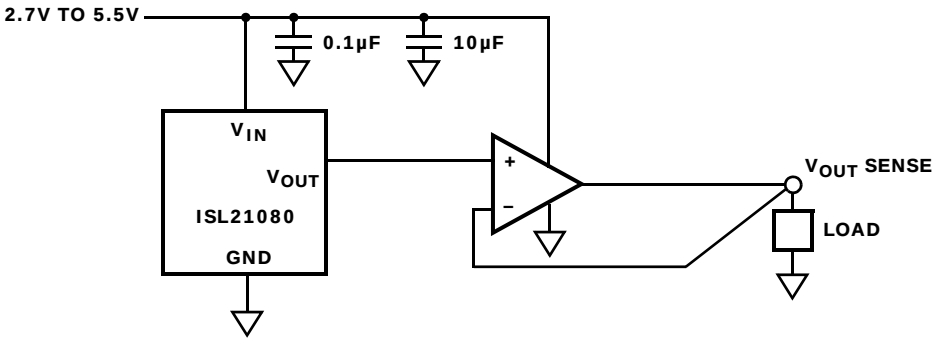

FIGURE 23. KELVIN SENSED LOAD

Revision History

The revision history provided is for informational purposes only and is believed to be accurate, but not warranted. Please go to web to make sure you have the latest Rev.

DATE	REVISION	CHANGE
10/14/09	FN6934.2	1. Removed "Coming Soon" on page 1 and 2 for -10, -20, -41, and -50 options. 2. Page 1. Moved "ISL21080-50 5.5V to 8.0V" from bullet to sub-bullet. 3. Update package outline drawing P3.064 to most recent revision. Updates to package were to add land pattern and move dimensions from table onto drawing (no change to package dimensions)
09/04/09	FN6934.1	**Converted to new Intersil template.** Added Revision History and Products Information. Updated Ordering Information to match Intrepid, numbered all notes and added Moisture Sensitivity Note with links. Moved Pin Descriptions to page 1 to follow pinout **Changed** in Features Section **From:** Reference Output Voltage 1.25V, 1.5V, 2.500V, 3.300V **To:** Reference Output Voltage 0.900V, 1.024V, 1.250V, 1.500V, 2.048V, 2.500V, 3.000V, 3.300V, 4.096V, 5.000V **From:** Initial Accuracy: 1.5V ±0.5% **To:** Initial Accuracy: ISL21080-09 and -10 ±0.7% ISL21080-12 ±0.6% ISL21080-15 ±0.5% ISL21080-20 and -25 ±0.3% ISL21080-30, -33, -41, and -50 ±0.2% **FROM:** Input Voltage Range ISL21080-12 (Coming Soon) 2.7V to 5.5V ISL21080-15 2.7V to 5.5V ISL21080-25 (Coming Soon) 2.7V to 5.5V ISL21080-33 (Coming Soon) 3.5V to 5.5V **TO:** Input Voltage Range: ISL21080-09, -10, -12, -15, -20, and -25 2.7V to 5.5V ISL21080-09, -10, and 20 (Coming Soon) ISL21080-30 3.2V to 5.5V ISL21080-33 3.5V to 5.5V ISL21080-41 (Coming Soon) 4.5V to 8.0V **Added:** ISL21080-50 (Coming Soon) 5.5V to 8.0V Output Voltage Noise 30µVP-P (0.1Hz to 10Hz) **Updated** Electrical Spec Tables by Tables with Voltage References 9, 10, 12, 20, 25, 30, 33 and 41. **Added** to Abs Max Ratings: VIN to GND (ISL21080-41 and 50 only -0.5V to +10V VOUT to GND (10s) (ISL21080-41 and 50 only -0.5V to +5.1V **Changed** Tja in Thermal information from "202.70" to "170" to match ASYD in Intrepid **Added** Note: Post-assembly x-ray inspection may also lead to permanent changes in device output voltage and should be minimized or avoided. Most inspection equipment will not affect the FGA reference voltage, but if x-ray inspection is required, it is advisable to monitor the reference output voltage to verify excessive shift has not occurred. **Added** Special Applications Considerations Section on page 12.
07/28/09	FN6934.0	Initial Release.

Products

Intersil Corporation is a leader in the design and manufacture of high-performance analog semiconductors. The Company's products address some of the industry's fastest growing markets, such as, flat panel displays, cell phones, handheld products, and notebooks. Intersil's product families address power management and analog signal processing functions. Go to www.intersil.com/products for a complete list of Intersil product families.

*For a complete listing of Applications, Related Documentation and Related Parts, please see the respective device information page on intersil.com: ISL21080

To report errors or suggestions for this datasheet, please go to www.intersil.com/askourstaff

FITs are available from our website at http://rel.intersil.com/reports/search.php

For additional products, see www.intersil.com/product_tree

Intersil products are manufactured, assembled and tested utilizing ISO9000 quality systems as noted in the quality certifications found at www.intersil.com/design/quality

Intersil products are sold by description only. Intersil Corporation reserves the right to make changes in circuit design, software and/or specifications at any time without notice. Accordingly, the reader is cautioned to verify that data sheets are current before placing orders. Information furnished by Intersil is believed to be accurate and reliable. However, no responsibility is assumed by Intersil or its subsidiaries for its use; nor for any infringements of patents or other rights of third parties which may result from its use. No license is granted by implication or otherwise under any patent or patent rights of Intersil or its subsidiaries.

For information regarding Intersil Corporation and its products, see www.intersil.com

Package Outline Drawing

P3.064

3 LEAD SMALL OUTLINE TRANSISTOR PLASTIC PACKAGE (SOT23-3)
Rev 2, 9/09

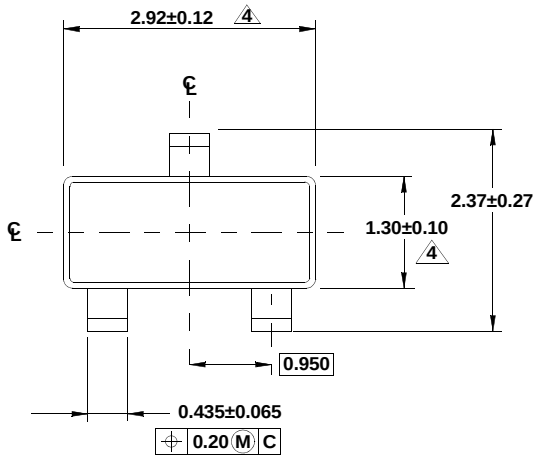

TOP VIEW

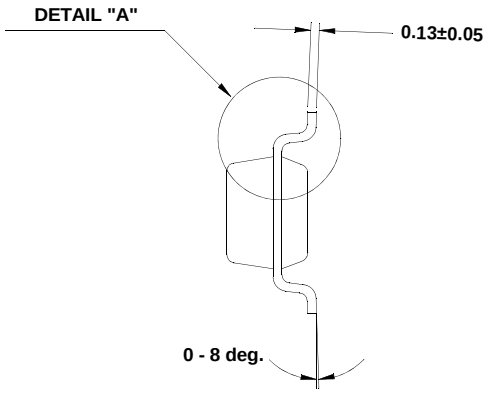

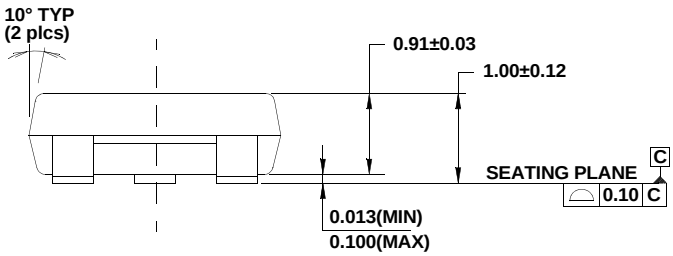

SIDE VIEW

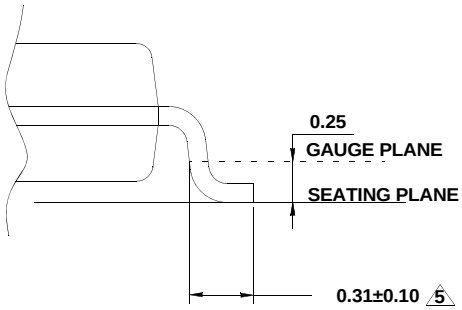

DETAIL "A"

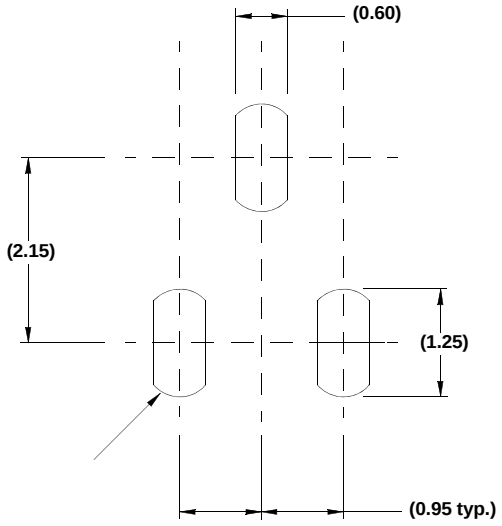

TYPICAL RECOMMENDED LAND PATTERN

NOTES:

1. Dimensions are in millimeters.
   Dimensions in ( ) for Reference Only.
2. Dimensioning and tolerancing conform to AMSEY14.5m-1994.
3. Reference JEDEC TO-236.
4. Dimension does not include interlead flash or protrusions.
   Interlead flash or protrusions shall not exceed 0.25mm per side.
5. Footlength is measured at reference to gauge plane.